CITROEN

SPARE PARTS CATALOGUE

MECHANICAL AND BODY

DS 19

MODELS 1956 TO 1962

NO. 466

MAY 1962 EDITION

CITROEN CARS LIMITED

TRADING ESTATE . SLOUGH . BUCKS.

ENGLAND

Telephones - Slough 23811 (10 Lines)

Telegrams - Citroworks - Slough

PREFACE

This catalogue consists of illustrations and descriptions of the mechanical and body parts for the DS 19, Models 1956 to 1962.

(a) Arrangement. The binding is of a type which allows easy replacement of the pages when any considerable changes are made.

(b) Classification and names. The parts are classified by units or groups. They are grouped, in the illustration, in the order in which they are assembled; in the text, on the opposite page, they are arranged in numerical order.

Finding a part number is thus made easy and rapid; when the length of the text requires the use of several pages, the illustration is repeated as often as needed.

We have added to the description of certain parts, dimensions and particulars which assist in quicker identification. These dimensions are given for identification only, and are subject to modification as may become necessary.

The numbers of each part used in a unit or sub-assembly is shown in the "Number off" column.

(c) Reading the Catalogue. Consult the body and chassis type symbols (Page V) in order to identify the type of chassis and body. Consult the Index (pp VI to IX) which refers to the text and illustration. Look for the part in the illustration on which the number is shown, look up this number on the text page and read the description there; should a part have several numbers on the illustration, look up these numbers on the text page to ensure successful identification.

With certain units and assemblies, different types of assembly have been dealt with in more than one chapter at the head of which the dates for the differing assemblies are given.

For parts not illustrated, and where there can be no difficulty in identifying them, look for the name and number directly in the text.

If it should happen that in some rare case you are not certain of being able to write out the order correctly, it is advisable to give us the chassis and engine numbers and the type of body.

The classification of the "Spare Parts" Department into Sections I, II, III and IV no longer applies to parts with numbers beginning with D, only, the classification "Section VI", however, still applies.

The parts in Section VI with D in the number, or with the old numbering, are incorporated, according to their purpose, in the chapters of the present catalogue but with the mention (Section VI) after the description.

Parts of the old series of numbering remain divided into sections indicated as (Section I), (Section II), (Section III), and (Section IV) after the part description.

(d) Placing Orders

1. Parts with numbers in the D series: Make out a separate order for -

- Parts in Section VI.
- Complete units, body, cylinder blocks.
- All other parts together in full numerical order.

Do the same for parts belonging to the DF, DM, DS and DW series.

2. Parts with numbers belonging to the "General series": Make out a special order for each section (Section I), (Section II), (Section III), (Section IV), and (Section VI).

The orders for the "General series" made out in this way apply to parts for all vehicles indiscriminately.

Special order forms are available on application.

(e) Prices and conditions of sale. Prices are given in a separate list; they are subject to alteration without notice.

The conditions of sale are shown at the head of our price-lists (spare parts, reconditioned units and standard exchanges).

NUMBERING OF PARTS

The new system of spare parts numbering which we adopted several years ago is that used for the DS 19 Model, and each division of the catalogue begins with these parts. After them come parts common to this model and to others, these parts retaining their style of numbering.

METHOD

The number is composed of:

(a) One or more capital letters indicating the type of car.

(b) Two numbers of one to three figures separated by a hyphen.
Example: DS 331-1d. Gearbox and clutch casing.

The last figure may be followed by a small letter used to indicate a part which is the same (as regards its purpose) but not interchangeable because:

- it is asymmetrical (right or left-hand part)
- the dimensions are different

COMPOSITION OF NUMBERS

The car is divided into nine main sections (units or unit assemblies serving the same purpose) designated by the first figure of the first number, namely:

1. Engine proper.
2. Engine (accessories connected with its purpose).
3. Transmission (clutch, gearbox, drive shafts and joints).
4. Connection with the ground (front and rear axles, brakes, steering).
5. Electrical, visibility, signalling.
6. Safety, comfort, tools.
7. Chassis, platform, hull.
8. Body, fittings.
9. Upholstery, trimming.

These nine main sections are themselves divided into different groups represented by the second figure in the first number.

These groups, in turn, are divided into sub-groups indicated by the third figure in the first number.

Example: DS 331-0a - Gearbox lid assembled with selector forks and rods.

CLASSIFICATION OF PARTS IN THE CATALOGUE

In all our printed matter we have adopted the following classification in principle:

1. Numerical, in conjunction with two numbers but governed by the first.
2. Alphabetical for the index letters (as prefix or suffix).

For concrete examples, see Index (pp X to XLV).

CATALOGUE IN NUMERICAL ORDER

The parts to which this new system of numbering is applied are not included in our "Catalogue in numerical order."

To make it more easy to find a part whose number you know, we have compiled an Index (pp. X to XLV) in this catalogue which shows you the page on which the part concerned appears.

RECOMMENDATION

You should take great care to note exactly:

- The letters (capitals as prefix, small letters as suffix);
- The hyphens separating the two numbers.

The omission of one of these items when composing a number completely alters the meaning and you would thus risk making an error in writing out the number of a part and of being sent a part entirely different from the one wanted.

SYMBOLS USED

TO DESIGNATE CHASSIS AND BODY TYPES

(petrol engine models)

SYMBOLS	GENERAL CHARACTERISTICS
TYPE DS 19 BERLINE	Engine: 4 cylinders 78 x 100 mm. aluminium cylinder head; Clutch: Single plate, hydraulically operated; Gearbox: 4 speeds, hydraulically operated; Steering: By rack and pinion, assisted; Brakes: Disc type on front wheels, drum type on rear wheels; Suspension: Hydro-pneumatic; Front track: 1,500 mm. Rear track: 1,300 mm. Front wheels: 165 x 400; Rear wheels: 155 x 400 (French production); Rear wheels: 165 x 400 (British production); Body: four-door, five seats.
TYPE DS 19 (EXPORT)	Same characteristics as DS 19 (cars fitted with special equipment particularly against dust).
TYPE DS 19 PRESTIGE	Same characteristics as DS 19 BERLINE except: Body with partition.
TYPE DS 19 CABRIOLET	Same characteristics as DS 19 BERLINE except Body: 2 doors, 5 seats.

TABLE OF CONTENTS

		PAGE NUMBERS
WINGS, FRONT		254 to 259
WINGS, REAR		260 to 263
PETROL SYSTEM	Petrol pump	28 to 31
	Tank pipes	28 to 31
PARTITION		277
GEARBOX	Hydraulic gear selector	82 to 85
	Gearbox complete	58
	Casing	59
	Lid	60 to 63
	Differential	72 and 73
	Forks and shafts	64 and 65
	Speedometer drive	60 to 63
	Pinions, shafts	66 to 71
	Gear selector	90 and 91
	Gearbox suspension	20 to 23
BODY		247
PIPING	Low pressure pump feed	74 and 75
	Clutch control	78 to 81
	Gearbox control	86 to 89
	Steering	158 to 167
	Brakes	152 to 157
	Suspension	158 to 167
BONNET		264 to 267

		PAGE NUMBERS
HEATING AND VENTILATION		218 to 229
GEAR AND CLUTCH OPERATION	Hydraulic gear selector	82 to 85
	Feed circuit	74 and 75
	Low pressure circuit	78 to 81
	Gear change circuit	86 to 89
	Non-return valve	74 and 75
	Pressure control valve	74 and 75
	Clutch engagement control	78 to 81
	Gear change speed control	82 to 85
	Low pressure pump	46 to 49
	Centrifugal regulator	76 and 77
	Gear change selector	90 and 91
HEIGHT VARIATION CONTROL		168 to 171
CUSHION, REAR		302
DEMISTING		218 to 229
STARTER		194 to 201
STEERING	Levers and rods	116 and 117
	Relay housings	116 and 117
	Piping	158 to 167
	Rack	110 to 113
	Centring device	106 to 109
	Hydraulic parts	114 and 115
	Steering wheel bracket	106 to 109

		PAGE NUMBERS
CUSHION, REAR		302
DYNAMO		186 to 193
EXHAUST		32 to 35
ELECTRICAL	Distributor	36 to 43
	Horns	244
	Battery	172 to 183
	Coils	36 to 43
	Cables and electrical fittings	241 to 244
	Ignition system	36 to 43
	Ignition control	36 to 43
	Switches	172 to 183
	Demister	218 to 229
	Starter	194 to 201
	Dynamo	186 to 193
	Interior lighting	230 to 239
	Direction indicators and parking lights	230 to 239
	Rear lights, stop lights, reflector	230 to 239
	Headlamps	230 to 239
	Radio telephone	245
	Regulator	186 to 193
BODY UNITS	Front units	248 to 251
	Rear units	252 and 253
CLUTCH	Mechanism, plate, fork	54 and 55
	Hydraulic control	78 to 81

		PAGE NUMBERS
AXLE, FRONT	Anti-roll bars	140 to 143
	Arms, swivels, hubs	96 to 101
	Half axle complete	96 to 101
	Coupling levers	96 to 101
AXLE, REAR	Anti-roll bars	102 to 105
	Arms complete	102 to 105
	Hubs and stub axles	102 to 105
WINDSCREEN WIPER		202 to 209
BRAKES	Brake unit, front	118 to 125
	Piping	152 to 157
	Hydraulic control	148 to 151
	Backplates, rear shoes	126 to 129
	Drum, rear	96 to 101
TRIMMING	Front and rear seats	302
	Rear light	297
GLASSES	Windscreen	297
	Front and rear doors (Berline)	280 to 287
	Doors (Cabriolet)	277
FITTINGS	Roof lining	298
	Trimming for front and rear doors	303
	Panel trimming	298
	Rear boot trimming	298
	Scuttle finishing panel	298
	Headrest	304

		PAGE NUMBERS
WINDSCREEN WASHER		180 to 185
WINDOW WINDER	Seals	280 to 287
	Glasses for front and rear doors	280 to 287
	Winder	280 to 287
REAR LIGHT	Seals	298
	Glass	297
	Channels	297
ENGINE	Camshaft	18 and 19
	Connecting rods	16 and 17
	Carburettor	24 to 27
	Crankcase	2 to 5
	Cylinder barrels	2 to 5
	Accelerator control	24 to 27
	Cylinder head	6 to 9
	Valve rockers	6 to 9
	Timing	18 and 19
	Air filter	14 and 15
	Engine complete	1
	Pistons	17 and 18
	Water and low pressure pump	46 to 51
	Oil pump and oil circulation	44 and 45
	Valves	6 to 9
	Engine suspension	20 to 23
	Manifolds	12 and 13
	Fan	46 to 51
	Crankshaft	16 and 17
TOOLS		246

		PAGE NUMBERS
WINDSCREEN	Glass	297
	Sun visor	240
	Channels	297
	Rear view mirror	240
BUMPERS	Bumpers, front	210 to 217
	Bumpers, rear	210 to 217
	Number plate	210 to 217
	Brackets	210 to 217
ROOF	Finishing sections	268 to 271
	Roof sills	268 to 271
	Roof siderails	268 to 271
	Quarter panels	268 to 271
	Roof	268 to 271
PEDAL GEAR	Hydraulic brake control	148 to 151
	Mechanical brake control	146 and 147
FACIA BOARD	Glove box	172 to 183
	Ash trays	172 to 183
	Glove box lid	172 to 183
	Facia panels	292 to 295
	Speedometer surround	292 to 295
	Facia board	292 to 295
	Control	172 to 183
DOORS FRONT AND REAR	Hinges	272 to 276
	Door frame fittings	272 to 276
	Doors, front	272 to 276
	Doors, rear	272 to 276
	Door frame channels	272 to 276

		PAGE NUMBERS
REAR BOOT DOOR	Stays	288 to 291
	Hinges	288 to 291
	Interior lining	298
	Rear boot door	288 to 291
RADIO TELEPHONE		245
RADIATOR	Water piping	52 and 53
	Fan cowl	52 and 53
WHEELS	Wheel accessories	246
LOCKS	Door handles, front and rear	278 and 279
	Locks, front and rear	278 and 279
FRONT SEATS		301
SUSPENSION	Dampers, front	140 to 143
	Dampers, rear	144 and 145
	Protection plugs	160 to 163
	Suspension piping	158 to 167
	Control valve - Accumulator	134 to 139
	Front cylinder - Front corrector - Suspension sphere	140 to 143
	Rear cylinder - Rear corrector - Suspension sphere	144 and 145
	Suspension pump	130 to 133
	Reservoir - distribution unit	134 to 139

	PAGE NUMBERS
DASHBOARD	172 to 183
CARPETS, FRONT AND REAR	304
DRIVESHAFTS	92 to 95

NUMERICAL INDEX

NUMBER	DESIGNATION	Section	PAGE No.
DS 1-03	Engine		1
DS 1-03b	Engine		-
DS 1-03c	Engine		-
DS 1-03e	Engine		-
DS 1-03f	Engine		-
D 8-05b	Body		247
DS 8-05b	Body		-
DS 8-05f	Body		-
DS 8-05h	Body		-
DS 8-09	Rear body unit		252
DS 8-09a	Rear body unit		-
DS 8-09b	Rear body unit		-
D 8-98	Dashboard		248
DS 8-98	Dashboard		-
DS 33-0	Gearbox		58
DS 33-0a	Gearbox		-
DS 33-0c	Gearbox		-
DS 33-0i	Gearbox		-
DS 33-0j	Gearbox		-
D 41-03d	Half-axle		96
D 41-03e	Half-axle		-
DS 41-03	Half-axle		-
DS 41-03a	Half-axle		-
D 64-1	Motor	VI	223 - 227
D 64-1a	Motor	VI	-
D 64-2	Assembly	VI	223
DS 111-01	Set of barrels		2
DS 111-01c	Set of barrels		-
D 111-3a	Gasket	VI	-
DS 111-3	Gasket	VI	-
DS 112-01	Cylinder head		6
DS 112-01a	Cylinder head		-
DS 112-3a	Gasket	VI	-
DS 112-3b	Gasket	VI	-
D 112-4	Screw		-
D 112-4a	Screw		-
DS 112-4	Screw		-
DM 112-87	Plate		-
DM 112-88	Gasket	VI	6-228
DS 112-91	Gasket		-
DS 112-91a	Gasket		-
DS 112-92	Collar	VI	-
DS 112-92a	Washer	VI	-

NUMBER	DESIGNATION	Section	PAGE No.
DS 113-02	Baffle		2
D 113-7	Gasket	VI	-
D 113-8	Gasket	VI	-
D 113-11	Gasket	VI	-
D 113-12	Gasket	VI	-
DM 113-16	Half-bearing	VI	17
DS 113-16b	Half-bearing	VI	-
DM 113-17	Half-bearing	VI	-
DS 113-17b	Half-bearing	VI	-
DM 113-18	Half-bearing	VI	-
DS 113-18	Half-bearing	VI	-
DS 113-50	Pipe		2
DS 113-91a	Bearing ring	VI	17
DS 113-91b	Bearing ring	VI	-
DS 113-91c	Bearing ring	VI	-
D 113-97	Plate		2
D 113-98	Screw		-
DM 114-5a	Cylinder block		-
DS 114-5	Cylinder block		-
DS 114-5a	Cylinder block		-
DF 114-85	Gasket		-
DF 114-86	Plate		-
DS 121-04	Crankshaft		17
DS 121-04h	Crankshaft		-
DS 121-04p	Crankshaft		-
D 121-05	Flywheel		-
DM 121-010	Connecting rod		-
DS 121-010	Connecting rod		-
D 121-2c	Bush		-
D 121-2d	Bush		-
D 121-6	Piston ring		-
DS 121-6	Piston ring		-
DS 121-6a	Piston ring		-
DS 121-7	Piston ring		-
DM 121-9	Half-bearing	VI	-
DS 121-10	Nut		-
D 121-13	Screw		-
DS 121-13	Screw		-
DS 121-15	Ring		-
DS 121-88	Cap	VI	-
D 121-92a	Screw		-
D 121-98	Dowel	VI	-
DS 121-99a	Washer		-
DM 123-0a	Camshaft		18

NUMBER	DESIGNATION	Section	PAGE No.
DS 123-0	Camshaft		18
DS 124-1	Tappet		-
DS 124-2	Rocker		6
DS 124-2a	Rocker		-
DS 124-3	Guide		-
DS 124-3a	Guide		-
DS 124-5	Push-rod		18
DS 124-5a	Push-rod		-
DS 124-5d	Push-rod		-
DS 124-5e	Push-rod		-
DS 124-6	Rocker shaft		6
DS 124-7	Valve		-
DS 124-8a	Valve		-
DS 124-9	Spring		-
DS 124-11	Cup		-
DS 124-17	Bracket		-
DS 124-17a	Bracket		-
DS 124-20b	Rocker		-
DS 124-20c	Rocker		-
DS 124-21	Rocker shaft		-
DS 124-21a	Rocker shaft		-
DS 124-22	Bracket		-
DS 124-22a	Bracket		-
DS 124-23	Bracket		-
DS 124-23a	Bracket		-
DS 124-25	Spring		-
DS 124-26	Cup	VI	-
DS 124-27	Cup	VI	-
DS 124-78	Cap	VI	-
DS 124-80	Spring		-
D 124-85	Washer		-
DS 124-85	Washer		-
DS 124-86	Distance piece		-
DS 124-87	Washer		-
DS 124-87a	Washer		-
DS 124-87b	Washer		-
DS 124-95	Cap	VI	-
DS 124-97	Washer	VI	9
DS 124-98	Spring		-
DS 126-1	Damper	VI	17
D 131-1	Cover		2
DS 131-1a	Cover		-
DS 131-10	Washer		17
DS 132-01	Breather		2
DS 132-2	Cylinder head cover		9
DS 132-2a	Cylinder head cover		-
DS 132-2b	Cylinder head cover		-
DS 132-4	Gasket		-
DS 132-4a	Gasket		-

NUMBER	DESIGNATION	Section	PAGE No.
D 132-9	Gasket	VI	2
D 132-9a	Gasket	VI	-
D 132-9b	Gasket	VI	-
D 132-9c	Gasket	VI	-
D 132-9d	Gasket	VI	-
DS 132-10	Breather		-
DS 132-71a	Stud		9
DS 132-81	Cap	VI	-
D 132-98	Sump		2
D 133-3a	Crossmember		21
DM 133-3	Crossmember		-
DS 133-5	Bearer		22
D 133-6	Bearer		21
D 133-11a	Crossmember		-
D 133-12a	Arm		-
D 133-14	Bearer		-
D 133-50	Half-bush		-
D 133-57	Distance piece		-
D 133-58	Packing		-
D 133-58a	Packing		-
D 133-59	Half-bush		-
D 133-60a	Cap		-
DS 133-66	Nut		22
D 133-71	Cup		21
DS 133-74	Arm		-
DS 133-74a	Arm		22
DS 133-75	Arm		21
DS 133-75a	Arm		22
D 133-84	Buffer		21
D 133-90	Bracket		-
DS 133-90	Bracket		22
D 133-91	Bracket		21
DS 133-91	Bracket		22
D 133-92	Spindle		21
DS 133-94	Protection cap		22
D 133-102	Bush		21
D 133-107	Washer		22
D 133-113	Cup		-
D 133-116	Bracket		21
DM 133-116	Bracket		-
D 133-117a	Thrust block housing		-
D 133-118	Thrust block		-
D 133-135	Washer		22
D 133-136	Packing		-
DS 133-139	Plate		-
DS 141-02	Manifold		10
DS 141-02a	Manifold		-
DS 141-02b	Manifold		-
DS 141-11	Gasket	VI	-

NUMBER	DESIGNATION	Section	PAGE No.
DS 141-11a	Gasket	VI	10
DS 141-11b	Gasket	VI	-
DS 141-12	Gasket	VI	-
DS 141-13	Housing		-
DS 141-13a	Housing		-
DS 141-88	Pipe		-
DM 141-95	Plate		-
DS 141-95	Plate		-
DS 141-96	Gasket	VI	-
DM 141-97	Gasket	VI	-
DS 141-97	Gasket	VI	-
DF 141-98	Union		10-50
DS 141-98	Union		10
DS 141-98a	Union		-
DS 141-99	Pipe		-
DS 141-99a	Pipe		-
DS 142-09	Unit		25
DS 142-09b	Unit		-
DS 142-010a	Cylinder		-
DS 142-020	Body		-
DS 142-1	Pedal		-
DS 142-5	Spring		-
DS 142-5a	Spring		-
DS 142-6	Bearing		-
DS 142-7	Lever		-
DS 142-7a	Lever		-
DS 142-8	Gasket	VI	10
DS 142-24	Pipe		-
DF 142-25	Tube		-
DS 142-25a	Tube		10-53
DS 142-53	Plate		25
DS 142-54	Cup		10
DS 142-56a	Bracket		25
DS 142-58	Distance piece		-
DS 142-60	Plate		-
DS 142-62	Pipe		-
DS 142-62a	Pipe		-
DS 142-62b	Pipe		-
DS 142-80	Rod		-
DS 142-80a	Rod		-
DS 142-80c	Rod		-
DS 142-90	Sleeve		-
DS 142-95	Gasket	VI	25-135-148
DS 142-98	Distance piece	VI	10
DS 142-98a	Distance piece	VI	-
DS 142-98b	Distance piece		-
DS 142-98c	Distance piece	VI	-
DS 142-99	Relay		25
DS 142-99c	Relay		-

NUMBER	DESIGNATION	Section	PAGE No.
DS 142-106	Union		10
DS 142-109	Ball pin		25
DS 142-112a	Nut		-
DS 142-115	Plate		-
DS 142-116	Washer		-
DS 142-116a	Washer		-
DS 142-117	Plate		-
DS 142-118	Bush		-
DS 142-121	Dowel		-
DS 142-122a	Distance piece		-
DS 142-132	Dust cover		-
DS 142-133	Spring		-
DS 142-138	Spring		26
DS 142-138a	Spring		-
DS 142-139	Plate		-
DS 142-139a	Plate		-
DS 142-139b	Plate		-
DS 142-150	Bracket	VI	-
DS 142-170	Nut		-
DS 142-171	Gasket		-
DS 142-202	Gasket		-
DS 171-0	Air filter	VI	14
DS 171-0a	Air filter	VI	-
DS 171-0b	Air filter	VI	-
DS 171-0c	Air filter		-
DS 171-0d	Air filter	VI	-
DS 171-3	Union		-
DS 171-3a	Union	VI	-
DS 171-5	Element	VI	-
DS 171-5a	Element	VI	-
DS 171-5b	Element	VI	-
DS 171-5c	Element	VI	-
DM 171-10	Cup	VI	-
DS 171-60	Clip	VI	-
DM 171-61	Rubber	VI	-
DM 171-63	Packing		-
DM 171-65	Bracket		-
DS 171-72	Clip		-
D 171-91	Bush		-
DS 171-96	Bracket		-
DS 173-0	Pump	VI	29
D 173-0a	Pump	VI	-
DM 173-8	Diaphragm	VI	-
DM 173-9	Gasket	VI	-
DS 173-9	Gasket	VI	-
D 174-3	Pipe	VI	-
DS 174-7	Pipe		-
DS 174-67	Screen		-
D 174-72	Grommet		-

NUMBER	DESIGNATION	Section	PAGE No.	REMARKS
D 174-73	Bracket		29	
D 174-75	Bush		-	
D 174-76	Plate		-	
D 174-77	Plate		-	
D 174-80	Bracket		-	
D 174-81	Pipe		-	
D 174-82	Pipe		-	
D 175-03	Cap	VI	-	
D 175-1	Tank	VI	-	
D 175-2	Cover		260	
DS 175-2a	Cover		263	
D 175-4a	Manifold	VI	29	
DS 175-5	Tank unit	VI	-	
DM 175-5a	Tank unit	VI	-	
DS 175-5b	Tank unit	VI	-	
DS 175-5c	Tank unit	VI	-	
D 175-9a	Union		-	
DM 175-13	Filter	VI	29-60	
DS 175-14a	Plug	VI	29	
D 175-16a	Cover		252	
D 175-17	Lining	VI	29	
D 175-18	Strap		-	
D 175-53	Packing		-	
DM 175-53	Packing		-	
D 175-54	Packing		-	
D 175-60	Buffer	VI	-	
D 175-63	Plate		-	
DS 175-63	Plate	VI	-	
D 175-66	Sleeve		-	
D 175-67	Strap		-	
D 175-72	Clip		-	
DS 175-75	Sleeve		-	
D 175-80	Washer		-	
DS 175-81	Cup	VI	-	
D 175-83	Sleeve		30	
DS 175-84	Pipe	VI	-	
D 175-86	Spring		260	
DS 175-86a	Spring		263	
DS 175-89	Pin		-	
DS 175-91	Hinge		-	
D 175-92	Buffer		260-263-294	
D 175-103	Support		30	
D 175-108	Packing		-	
DM 175-110	Bracket	VI	-	
DS 181-1	Manifold		10	
DS 181-1a	Manifold		-	
DS 181-2	Gasket	VI	-	
DS 181-3	Gasket	VI	13	
DS 181-4a	Bracket		-	

NUMBER	DESIGNATION	Section	PAGE No.	REMARKS
DS 181-4b	Bracket		13	
DS 181-5a	Bracket		-	
DS 181-5b	Bracket		-	
DS 181-6	Shield		-	
DS 181-6a	Shield	VI	-	
DS 181-8	Plate		-	
DS 181-11	Plate		-	
DS 181-87a	Panel		-	
DS 181-99	Plate	VI	-	
DS 182-1	Expansion chamber		33	
DS 182-1a	Expansion chamber		-	
DS 182-1b	Expansion chamber		33-34	
D 182-3	Pipe	VI	33	
D 182-3a	Pipe	VI	-	
DM 182-3b	Pipe		34	
DM 182-3c	Pipe		-	
D 182-6a	Half-clip		33-34	
D 182-7	Gasket	VI	33	
DM 182-7	Gasket	VI	34	
DM 182-7a	Gasket	VI	-	
DS 182-54	Pipe		-	
DS 182-62	Distance piece		33-34	
DM 182-64	Half-clip		34	
DS 182-68a	Bracket		33-34	
D 182-69a	Clip	VI	33	
DM 182-69	Flange		34	
D 182-76	Half-clip		33	
DM 182-76	Half-clip		34	
DS 182-79	Clip		33-34	
DS 182-80	Strap		-	
D 182-83	Fish-tail		33	
D 182-84	Plate	VI	33-34	
D 182-85	Distance piece	VI	-	
DS 182-87	Buffer		34	
DS 182-91	Screw		-	
D 182-96a	Screw		33	
D 182-98	Clip		-	
DM 182-101	Clip		34	
DM 183-0	Silencer		-	
DS 183-0	Silencer		33	
DS 183-0a	Silencer		-	
DS 183-0b	Silencer		-	
D 183-69	Plate	VI	33-34	
D 183-70	Yoke		-	
DS 183-70	Yoke		34	
D 183-71	Spring		33-34	
DS 183-71	Spring		34	
D 183-72	Packing		33-34	
DS 183-72	Packing		34	

NUMBER	DESIGNATION	Section	PAGE No.	REMARKS
D 183-93	Plate		33-34	
DS 211-05	Distributor	VI	37	
DS 211-05b	Distributor	VI	41	
DS 211-05c	Distributor	VI	-	
DS 211-1	Control	VI	37-41-172-176	
DS 211-4	Cam	VI	37	
DS 211-6	Weight	VI	-	
DM 211-8	Condenser	VI	41	
DS 211-8	Condenser	VI	37	
DS 211-9	Cover	VI	-	
DS 211-10	Spring		37-41	
DW 211-10	Spring	VI	41	
DM 211-15	Distributor head	VI	-	
DM 211-15a	Distributor head	VI	-	
DM 211-16	Rotor	VI	-	
DM 211-16a	Rotor	VI	-	
DM 211-17a	Arm with contact	VI	41	
DS 211-17	Contact breaker	VI	37	
DS 211-17a	Contact breaker	VI	-	
DS 211-17b	Contact breaker	VI	41	
DW 211-48	Trunnion	VI	-	
DW 211-49	Trunnion	VI	-	
DW 211-59	Rod	VI	-	
D 211-56	Bush		172-176-180	
DM 211-80	Lever		41	
DS 211-60	Lever		37	
DW 211-60	Lever	VI	41	
DS 211-62	Panel		37	
DW 211-62	Panel	VI	41	
DS 211-66	Terminal	VI	37	
DS 211-74	Screw	VI	-	
DS 211-80	Terminal	VI	-	
DS 211-93	Circlip	VI	-	
DS 212-05	Cable		-	
DM 212-08b	Coil	VI	41	
DM 212-08c	Coil	VI	-	
DS 212-013	Connection	VI	-	
DS 212-014	Packet	VI	42	
DS 212-5a	Cable		41	
DS 212-6a	Cable		-	
DS 212-7	Sparking plug	VI	37-41	
DS 212-7b	Sparking plug	VI	41	
DS 212-9	Cable		-	
DS 212-12	Cable		37	
DS 212-12a	Cable		41	
DS 212-13	Cable		37	
DS 212-13a	Cable		41	
D 212-14a	Switch	VI	37-41-172-176	
DW 212-14a	Switch	VI	41-180	

NUMBER	DESIGNATION	Section	PAGE No.	REMARKS
DS 212-22	End piece	VI	41	
DF 212-52	Plate		-	
DS 212-54	End piece	VI	37-41	
DS 212-55	End piece	VI	41	
DS 212-70	Sheath	VI	37-41	
DS 212-70a	Sheath	VI	41	
DS 212-71	End piece	VI	37-42	
DS 212-72	Rod	VI	-	
DS 212-72a	Rod	VI	42	
DS 212-73	Bracket		-	
DS 212-77	Protector	VI	-	
DS 212-82	Arm		37	
D 212-96	Bracket		37-42-172-176	
DS 212-113	Plug	VI	9-37-42	
DS 212-115	Plug		37	
DS 212-115a	Plug		37-42	
DS 212-116	Cap		-	
DS 212-117	Washer		37	
DS 221-1	Filler	VI	9	
DS 221-83	Filter	VI	-	
DS 221-92	Gasket	VI	-	
DS 221-96	Guide	VI	2	
D 222-01	Pump		45	
DS 222-01	Pump		-	
D 222-3	Piping		-	
D 222-4	Body		-	
DS 222-5	Spring		-	
DS 222-7	Pinion		-	
DS 222-11	Base		-	
DS 224-1	Pipe		-	
DF 231-04	Pump		50	
DS 231-04b	Pump		46	
D 231-1	Body		-	
DF 231-1	Body		50	
DS 231-1c	Body		46	
DS 231-2	Pipe		53	
D 231-3	Spindle		46	
DF 231-3	Spindle		50	
DS 231-3	Spindle		46	
DS 231-3a	Spindle		-	
DS 231-3b	Spindle		-	
D 231-4a	Pulley		-	
DM 231-4a	Pulley		50	
DS 231-4	Pulley		46	
D 231-5a	Pulley		18	
DF 231-5	Pulley		-	
DS 231-5	Pulley		-	
DS 231-5a	Pulley		-	
D 231-6	Belt	VI	46	

NUMBER	DESIGNATION	Section	PAGE No.	REMARKS
DM 231-6	Belt	VI	50	
DS 231-6	Belt	VI	-	
D 231-8a	Spindle		18	
DM 231-8	Spindle		-	
DS 231-8	Spindle		-	
D 231-10	Piping		53	
D 231-11	Piping		-	
DS 231-61	Screw		18	
DS 231-62	Key	VI	46	
DS 231-65	Cover		-	
DS 231-65a	Cover		50	
D 231-66	Piping	VI	46	
D 231-67	Pipe		-	
DS 231-67	Pipe		-	
D 231-68	Union		-	
D 231-69	Nut		18	
DS 231-74	Washer		-	
D 231-76	Key	VI	-	
D 231-77	Bush	VI	46	
D 231-79	Washer		-	
D 231-80	Spring		-	
DS 231-80	Spring		-	
D 231-81	Washer		-	
DS 231-81	Washer		-	
DS 231-82	Cage		-	
D 231-83	Washer		-	
D 231-84	Gasket	VI	-	
D 231-87	Gasket	VI	46-50	
D 231-88	Gasket	VI	-	
D 231-91	Washer		18-46-50	
DM 231-91	Washer		-	
DS 231-91	Washer		-	
DS 231-92	Washer		49-50	
DS 231-92a	Washer		-	
DS 231-92b	Washer		-	
DS 231-92c	Washer		-	
D 231-93	Washer		18	
D 231-93a	Washer		-	
DS 231-100	Gasket	VI	60	
D 232-03	Cap	VI	53	
DM 232-8a	Ring	VI	-	
DM 232-9a	Control	VI	-	
DM 232-50	Shield		-	
DM 232-64	Protector	VI	-	
DM 232-65	Plate	VI	-	
DM 232-66	Bracket		-	
DS 232-75	Bracket		-	
DS 232-78	Tie-rod		-	
DS 232-78a	Tie-rod		-	

NUMBER	DESIGNATION	Section	PAGE No.	REMARKS
D 232-82	Packing		53	
D 232-82a	Packing		-	
D 232-96	Plate		-	
D 234-01	Regulator	VI	49-50	
DS 234-01	Regulator	VI	49-50-53	
DS 235-1	Pipe		53	
DM 235-1c	Pipe		-	
D 235-3	Union		-	
D 235-4	Pipe		-	
DS 235-10	Union		-	
DM 235-10a	Union		-	
DM 235-11a	Union		-	
D 241-1a	Fan		49	
DM 241-1	Fan		49-50	
DS 241-93	Screw	VI	49-50	
DS 242-1	Cowl	VI	53	
DM 242-2a	Deflector		-	
D 251-01a	Bearing cap		60	
D 251-1	Handle		246	
DS 251-2	Spindle		60-246	
DS 251-2a	Spindle		-	
D 251-4a	Extension		246	
DS 251-4a	Extension		-	
DS 251-4b	Extension		-	
D 251-79	Spring		-	
D 251-81	Spring		-	
D 312-0	Mechanism	VI	54	
D 312-1	Carrier	VI	-	
D 312-2	Spring	VI	-	
D 312-2a	Spring	VI	-	
D 312-99	Cup	VI	-	
D 313-01	Plate	VI	-	
DS 314-01	Bracket		-	
DS 314-02	Cylinder		79	
D 314-04	Corrector		-	
D 314-04a	Corrector		-	
DS 314-04a	Corrector		-	
DS 314-04b	Corrector		-	
DS 314-017	Regulator		76	
DS 314-4	Fork		54	
DS 314-4a	Fork		-	
D 314-6	Spring	VI	-	
DS 314-8	Rod		49	
D 314-9	Spring	VI	54	
DS 314-10	Belt	VI	76	
D 314-13	Body		49	
DS 314-13	Body		-	
D 314-16	Spindle		54	
DS 314-16	Spindle		54	

NUMBER	DESIGNATION	Section	PAGE No.	REMARKS
D 314-17	Nut		79	
D 314-19	Wheel		49	
D 314-20	Pinion		-	
DS 314-20	Pinion		-	
DS 314-22	Plate		60	
D 314-26	Lever		91	
D 314-28a	Screw		54	
D 314-29	Bush	VI	67	
D 314-30	Valve		75	
D 314-31	Valve	VI	-	
D 314-32	Gasket	VI	54	
DS 314-35	Nut		79	
DS 314-56	Spindle		76	
D 314-58	Dust cover		79	
DS 314-58	Pulley		76	
DS 314-59	Spindle		-	
D 314-60	Circlip		67	
D 314-69	Pipe	VI	54	
D 314-70	Control		91	
DS 314-74	Tie-rod		76	
D 314-76	Guide		54	
D 314-77	Spring		-	
D 314-78	Spring		91	
D 314-80	Key		49	
DS 314-80	Key		-	
D 314-82	Nut		49-50	
D 314-87	Piping		75	
DS 314-87	Pipe		-	
D 314-91	Pipe		-	
DS 314-91	Pipe		-	
D 314-99	Hub		54	
D 314-99a	Hub		-	
D 314-100	Pipe		75	
DS 314-100	Pipe		-	
D 314-101	Pipe		-	
D 314-02	Pipe		-	
D 314-103	Pipe		-	
D 314-110	Cap		79	
D 314-111	Piston		-	
D 314-112	Spring	VI	-	
D 314-113	Cap		-	
DS 314-123	Pipe		76	
DS 314-126a	Spring		79	
D 314-130	Bracket		-	
DS 314-130	Arm		76-79	
D 314-133	Bracket		75	
DS 314-134	Piping		76	
DS 314-134a	Piping		-	
DS 314-138	Angle Plate		76	

NUMBER	DESIGNATION	Section	PAGE No.	REMARKS
D 314-140	Cup		49-50	
D 314-142	Union		49-76	
D 314-143	Pipe		54	
DS 314-167	Screw		79	
DS 314-168	Locknut		-	
DS 314-169	Buffer		-	
DS 314-185	Plate	VI	76	
DS 314-187	Piston		-	
DS 314-188	Washer		-	
DS 314-189	Spring		-	
DS 314-190	Flange		-	
DS 314-191	Cup		-	
DS 314-192	Spring		-	
DS 314-193	Tappet		-	
DS 314-194	Pipe		-	
DS 314-200 to DS 314-204	Washer		-	
DS 331-0a	Cover		60	
DM 331-04	Breather		-	
D 331-1b	Casing		59	
D 331-1c	Casing		-	
DF 331-1c	Casing		-	
DS 331-1	Casing		-	
DS 331-1a	Casing		-	
DS 331-1c	Casing		-	
DS 331-1d	Casing		-	
D 331-2a	Gasket	VI	60	
D 331-3a	Cap		-	
DS 331-3	Cap		-	
D 331-3b	Cap		-	
D 331-6a	Cap	VI	-	
D 331-7	Gasket	VI	-	
D 331-11a	Cover		-	
DS 331-11	Cover		-	
D 331-13a	Cap		-	
D 331-13b	Cap		-	
D 331-63	Nut	VI	-	
D 331-77	Washer		-	
D 331-79	Gasket	VI	92	
D 331-81	Screw		60	
D 331-87	Stud		21-60-87	
D 331-87a	Stud		- - -	
D 331-87b	Stud		60	
D 331-88	Gasket	VI	-	
D 331-89a	Housing		67	
D 331-90	Gasket	VI	60	
D 331-91a	Housing		67	
D 332-1b	Spindle		-	

NUMBER	DESIGNATION	Section	PAGE No.
DS 332-1	Spindle		67
D 332-2	Spindle		-
D 332-4	Nut		-
D 332-84	Lockplate		-
DS 332-91	Distance piece		-
D 332-94	Screw		-
D 332-95 to D 332-95d	Washer		-
DS 332-98	Peg	VI	-
D 332-300 to D 332-330	Washer		-
D 333-7	Pinion		-
D 333-7a	Pinion		-
DS 333-7a	Pinion		-
DS 333-7b	Pinion		-
D 333-8	Pinion		-
DS 333-8	Pinion		-
D 333-9	Pinion		-
D 333-12	Pinion		-
D 333-13	Pinion		-
D 333-14c	Pinion		-
DS 333-14	Pinion		-
DS 333-14a	Pinion		68
D 333-15	Pinion		-
DS 333-15	Pinion		-
D 333-16	Gear Train		-
DS 333-16	Gear Train		-
DS 333-17	Pinion		-
D 333-18b	Pinion		-
DM 333-18	Pinion		-
D 333-73	Distance piece	VI	-
DS 333-73	Distance piece	V	-
D 333-74 to D 333-74d	Washer		-
D 333-80	Washer		-
D 333-81	Dowel		-
D 333-83 to D 333-83e	Half washer		-
D 333-84	Washer		-
D 333-86 to D 333-86h	Washer		-
D 333-300 to D 333-340	Washer		-

NUMBER	DESIGNATION	Section	PAGE No.
D 334-07	Unit		83
DS 334-07a	Unit		-
DS 334-07d	Unit		-
DS 334-07e	Unit		-
D 334-010	Selector		91
DS 334-010	Selector		-
DS 334-010a	Selector		-
D 334-014	Corrector		83
DS 334-014	Corrector		-
DS 334-014a	Corrector		-
D 334-2	Knob	VI	91-168-301
D 334-2	Knob	VI	91
DS 334-4a	Grille		-
D 334-11	Spring		-
D 334-13	Lock		64
D 334-19	Fork		-
D 334-23	Cup		-
DS 334-23	Cup		-
D 334-24	Spring		-
DS 334-41	Piston		83
DS 334-41a	Piston		-
DS 334-42	Piston		-
DS 334-42a	Piston		-
D 334-44	Piston		-
D 334-45a	Pipe assembly		87
DS 334-45	Pipe assembly		-
D 334-47	Slide		64
D 334-48	Cover		83
DS 334-48	Cover		-
D 334-49	Pipe assembly		87
D 334-49a	Pipe assembly		-
DS 334-49	Pipe assembly		-
D 334-50	Lever		91
DS 334-50	Lever		-
D 334-55	Spring		-
D 334-57	Washer		83
D 334-59	Gasket	VI	-
DS 334-59	Gasket	VI	-
D 334-61	Gasket	VI	-
D 334-62	Dust Cover		83-111
DS 334-63	Cover		83
D 334-65	Sleeve		91
D 334-67	Spindle		-
DS 334-69	Screw		87
D 334-71	Spring		83
D 334-74	Collar		-
DS 334-75	Washer		-
D 334-77	Clip		87
D 334-83	Spring		83

NUMBER	DESIGNATION	Section	PAGE No.	REMARKS
D 334-81	Spring		83	
DS 334-81	Spring		-	
D 334-85	Spindle		64	
D 334-88a	Screw		-	
D 334-89	Washer		83	
DS 334-89	Washer		-	
D 334-92	Spring		-	
D 334-93	Piping		75	
D 334-94	Filter	VI	83	
D 334-96	Washer		-	
D 334-97a	Pipe assembly		75	
DS 334-97b	Pipe assembly		-	
D 334-98	Lever		64	
D 334-100	Clip		91	
DS 334-101	Stud		83	
D 334-102	Rod		91	
DS 334-102	Rod		-	
D 334-121	Pipe assembly		87	
DS 334-121	Pipe assembly		-	
DS 334-121a	Pipe assembly		-	
D 334-123	Plate	VI	-	
DS 334-123	Plate	VI	-	
D 334-125	Bracket		91	
D 334-127	Flange		87	
DS 334-127	Flange		-	
D 334-128	Flange		-	
DS 334-128	Flange		-	
D 334-132	Plate	VI	-	
DS 334-132	Plate	VI	-	
DS 334-139	Pipe		79	
DS 334-140	Plate	VI	75	
DS 334-140a	Plate	VI	-	
DS 334-141	Assembly	VI	294	
D 334-142	Spring		91	
D 334-143	Spring		-	
DS 334-149	Plate	VI	79-84	
DS 334-149a	Plate	VI	-	
D 334-151	Screw		84	
D 334-152	Nut		-	
DS 334-157	Pipe		76-164	
D 334-167	Clip		91	
DS 334-169a	Bracket		84	
DS 334-170	Union		76	
DS 334-170a	Union		-	
D 334-172	Plate	VI	293	
D 334-173	Plate	VI	-	
D 334-174	Plate	VI	-	
D 334-177	Bracket		87	
DS 334-180	Gasket	VI	49-87	

NUMBER	DESIGNATION	Section	PAGE No.	REMARKS
DS 334-181	Gasket	VI	26-87-131	
D 334-182e to D 334-182u	Washer		87	
D 334-183h to D 334-183w	Packing		88	
DS 334-183 to DS 334-183f	Washer	VI	-	
DS 334-183h to DS 334-183w	Washer		-	
D 334-184	Plate		-	
D 334-185	Plate		-	
D 334-186	Pipe assembly		79	
DS 334-186a	Pipe assembly		-	
DS 334-186b	Pipe assembly		-	
DS 334-186d	Pipe assembly		-	
DS 334-186e	Pipe assembly		-	
DS 334-186f	Pipe assembly		-	
DS 334-186g	Pipe assembly		-	
DS 334-186h	Pipe assembly		-	
D 334-187a	Pipe assembly		84	
DS 334-187	Pipe assembly		-	
DS 334-187b	Pipe assembly		-	
D 334-190	Screw		-	
D 334-196	Pad	VI	91	
D 334-202	Washer		61	
D 334-203 to D 334-203n	Washer		88	
D 334-204	Clip		75	
D 334-204a	Clip		75-76	
DS 334-211	Lining		294	
D 334-223 to D 334-223p	Packing		88	
D 334-244	Disc	VI	84	
D 334-245	Disc	VI	-	
D 334-246	Distance piece		-	
D 334-248	Spring		91	
D 334-260	Pin		64	
DS 334-260	Pin		-	
DS 334-261	Pin		-	
DS 334-262	Pin		-	
DS 334-277	Buffer		84	
DS 334-278	Gasket	VI	76-84	
DS 334-279	Gasket	VI	84-135	

NUMBER	DESIGNATION	Section	PAGE No.	REMARKS
DS 334-280	Plate	VI	88	
DS 334-281	Plate	VI	-	
DS 334-285	Plug	VI	75	
DM 335-05	Synchromesh		68	
D 335-06b	Synchromesh		-	
D 335-8	Collar		-	
D 335-9a	Sliding pinion		-	
D 335-13a	Synchromesh		-	
D 333-15	Set of rods		-	
D 335-82			-	
to	Washer		71	
D 334-82h			-	
D 343-1	Casing		72	
DS 343-1	Casing		-	
DS 343-1a	Casing		-	
DS 343-1b	Casing		-	
D 343-2	Planet gear		-	
DS 342-2	Planet gear		-	
D 343-3	Satellite		-	
D 343-5	Screw		-	
DS 343-5	Screw		-	
D 343-6	Screw		-	
DS 343-6	Screw		-	
DS 343-7a	Washer	VI	-	
DS 343-7e	Washer	VI	-	
DS 343-7e	Washer	VI	-	
DS 343-7g	Washer	VI	-	
D 343-8	Washer		-	
D 343-8a	Washer		-	
D 343-8h	Washer		-	
DS 343-8c	Washer		-	
DS 343-8e	Washer		-	
DS 343-8g	Washer		-	
DS 343-8i	Washer		-	
D 343-9	Crosshead		-	
D 343-97			-	
to	Washer		-	
D 343-97g			-	
D 343-98			-	
to	Washer		-	
D 343-98g			-	
DS 344-01	Crown wheel and pinion		71-72	
DS 344-5	Nut		71	
D 344-90	Circlip		-	
D 344-94	Lock Plate		-	
D 344-96	Circlip		-	
D 371-1	Shaft		92	
D 371-1a	Shaft		-	
DS 371-1	Shaft		-	
DS 371-1a	Shaft		-	

NUMBER	DESIGNATION	Section	PAGE No.	REMARKS
D 371-3	Housing		92	
D 371-3a	Housing		-	
D 371-5	Bush	VI	-	
D 371-92	Bush		-	
D 371-93	Bush		-	
D 371-95	Screw		-	
D 371-96	Nut		-	
D 371-99	Washer	VI	-	
D 372-88	Sheath		-	
D 372-89	Screw		96	
D 373-01	Driveshaft		92	
D 373-01a	Driveshaft		-	
D 373-01b	Driveshaft		-	
D 373-01c	Driveshaft		-	
D 373-81	Lining		-	
D 373-82	Lining		-	
D 373-83	Lining		-	
D 373-84	Lining		-	
D 373-91	Half Cup		-	
DS 373-94	Gasket	VI	-	
D 373-99	Sheath		-	
D 376-1	Driving sleeve		-	
D 376-2	Block		-	
DS 376-3	Flange		-	
D 376-4	Flange		-	
DS 376-6	Drive		-	
D 376-95	Sleeve		-	
D 376-96	Ring		-	
D 376-97	Bracket		-	
D 376-98	Washer		-	
D 381-1	Pinion		60	
D 381-2	Socket		-	
D 381-2a	Socket		-	
D 391-01	Pump		131	
D 391-01a	Pump		-	
DF 391-01	Pump		-	
DS 391-01	Pump		-	
DS 391-01g	Pump		-	
DS 391-02	Cylinder		-	
DS 391-03b	Regulator		135	
D 391-07a	Shaft		131	
DS 391-010	Pump		-	
D 391-3a	Spring		-	
D 391-4a	Spring		-	
D 391-5	Valve		-	
D 391-10	Spring		135	
D 391-11	Cap		-	
DS 391-11a	Cap		-	
D 391-13	Pulley		131	

NUMBER	DESIGNATION	Section	PAGE No.	REMARKS
DS 391-13	Pulley		131	
DS 391-13a	Pulley		-	
DS 391-15b	Body		-	
DS 391-16a	Bearing		-	
DS 391-16b	Bearing		-	
D 391-18	Belt	VI	-	
D 391-18a	Belt	VI	-	
DF 391-18	Belt	VI	-	
D 391-20	Cover		-	
D 391-21	Bearing	VI	-	
D 391-22	Bracket		135	
D 391-25	Piping		159	
DM 391-25	Piping	VI	159-164	
DS 391-45	Pipe		164	
DS 391-47	Union		-	
DS 391-48	Union		-	
DS 391-48a	Union		-	
DS 391-50	Distance piece		131	
D 391-51	Distance piece		135	
D 391-52	Stay		-	
DS 391-52	Nut		-	
D 391-53	Cup		131	
D 391-54	Deflector		-	
D 391-55	Spring		-	
DS 391-56	Bush		-	
D 391-57	Plug	VI	160	
D 391-58	Plug	VI	-	
D 391-59	Washer		135	
D 391-59a	Washer		-	
D 391-60	Washer	VI	160	
D 391-63	Washer		163	
DS 391-66	Washer	VI	135	
D 391-67	Gasket		131	
DS 391-71	Block		164	
D 391-76	Nut	VI	131	
D 391-77	Lockplate		-	
D 391-78	Packing		135	
D 391-78a	Packing		-	
D 391-78b	Packing		-	
DS 391-80	Stay		-	
D 391-81	Cup		-	
D 391-82	Ball pin		131	
D 391-83	Clip		-	
DS 391-84a	Pipe		159	
DS 391-84b	Pipe		159-164	
DS 391-84c	Pipe		164	
DS 391-85	Stay		131	
DS 391-85a	Stay		-	
DS 391-86	Plate		-	

NUMBER	DESIGNATION	Section	PAGE No.	REMARKS
D 391-88	Plug		131-163	
DS 391-88	Plate		76	
D 391-90a	Distance piece		131	
DS 391-92	Nut		-	
D 391-93	Gasket		135	
DS 391-94	Clip		-	
DM 391-96	Screw		-	
D 391-98	Cup		131	
D 391-99	Circlip		-	
D 391-100	Pipe		159	
DS 391-100	Pipe		164	
D 391-102	Pipe		152	
DS 391-102	Pipe		164	
D 391-103	Sleeve		159	
DS 391-104	Sleeve		159-164	
D 391-105	Bush		75-76-159-164	
D 391-108	Bush		159-164	
D 391-109	Lining	VI	- -	
D 391-110	Sheath		159	
D 391-111	Plug	VI	163	
D 391-112a	Union		159	
DM 391-112	Union		164	
D 391-113	Bush		159-164	
D 391-116	Sheath		159	
D 391-118	Ring		-	
D 391-119	Grommet		152-159	
DS 391-126	Pipe		159-164	
D 391-127	Sheath		76-159	
DS 391-127	Clip		159	
D 391-128	Sheath		159-164	
D 391-129	Sheath		- -	
D 391-130	Buffer	VI	159	
DS 391-131a	Screw		131	
DS 391-132a	Screw		-	
DS 391-133a	Nut		-	
DS 391-136	Sleeve		159-164	
DS 391-140	Clip		- -	
DS 391-141	Clip		- -	
DS 391-144	Piping	VI	- -	
DS 391-145	Piping	VI	- -	
DS 391-146	T. Pipe	VI	163	
DS 391-148	T. Pipe	VI	-	
DS 391-149	Y. Pipe	VI	-	
DS 391-150	T. Pipe	VI	-	
DS 391-151	Pipe	VI	-	
DS 391-152	Pipe	VI	-	
DS 391-161	Bush	VI	-	
D 391-512 to D 391-529	Rod		132	

NUMBER	DESIGNATION	Section	PAGE No.	REMARKS
D 392-01	Accumulator		135	
D 392-02	Accumulator		-	
DF 392-04	Accumulator		-	
D 392-3	Spring		-	
DF 392-76	Pipe		156	
DF 392-78	Pipe		-	
DF 392-81	Tie-rod		135	
DF 392-82	Tie-rod		-	
DF 392-85	Pipe		156	
D 392-86	Pipe		152	
D 392-88	Washer		135	
D 392-90	Lining		152-156-164	
D 392-91	Flange		135	
DF 392-91	Flange		-	
D 392-97	Screw		-	
DM 393-02c	Reservoir		-	
DS 393-02c	Reservoir		-	
DS 393-02g	Reservoir		-	
DS 393-02h	Reservoir		-	
DS 393-02i	Reservoir		136	
D 393-03	Block		-	
DS 393-03	Block		-	
DS 393-05a	Reservoir		-	
D 393-2	Pipe	VI	-	
D 393-3	Filter		-	
DS 393-3	Filter	VI	-	
D 393-4	Filter	VI	-	
DS 393-4	Filter		-	
D 393-22	Pipe	VI	-	
DS 393-22	Pipe	VI	-	
DM 393-23	Plug	VI	-	
DS 393-61	Spring	VI	-	
DS 393-66	Distance piece		76-152	
D 393-69	Plunger		136	
D 393-73	Lining		75-159	
D 393-75	Strap		136	
D 393-85	Washer	VI	-	
DS 393-85	Washer	VI	-	
D 393-87	Distance piece		-	
DM 393-87	Distance piece		-	
D 393-90	Gasket		-	
D 393-91	Spring		-	
D 393-92	Spring		-	
D 393-94	Pipe		152	
D 393-97	Packing		136	
D 412-03	Arm		96	
D 412-03a	Arm		-	
D 412-3d	Bracket		-	
D 412-3e	Bracket		-	

NUMBER	DESIGNATION	Section	PAGE No.	REMARKS
DS 412-3	Bracket		96	
DS 412-3a	Bracket		-	
D 412-4	Nut		-	
D 412-4a	Nut		-	
DS 412-4	Nut		-	
D 412-8	Arm		-	
D 412-8a	Arm		-	
DS 412-8	Arm		-	
DS 412-8a	Arm		-	
DS 412-62	Washer	VI	-	
D 412-81 to D 412-81p	Washer		-	
D 412-83	Plug		-	
D 412-84 to D 412-84m	Washer		-	
D 412-85	Washer		-	
D 412-86a	Screw		99	
DS 412-86	Screw		-	
D 412-88a	Screw		-	
D 413-03	Assembly		-	
DS 413-03	Assembly		-	
DS 413-03a	Assembly		-	
D 413-04	Assembly		-	
DS 413-04	Assembly		-	
D 413-07b	Swivel		-	
D 413-07c	Swivel		-	
DS 413-07	Swivel		-	
DS 413-07a	Swivel		-	
D 413-4	Lever		-	
DS 413-4	Lever		-	
D 413-11	Nut	VI	-	
D 413-81	Spring		99-140	
D 413-85	Gasket		99	
DS 413-85	Gasket		-	
DS 413-87a	Cup		-	
DS 413-87b	Cup	VI	-	
DS 413-300 to DS 413-327	Washer		-	
DS 413-80a	Weight	VI	246	
DS 416-80b	Weight	VI	-	
DS 416-80c	Weight	VI	-	
DS 416-80e	Weight	VI	-	
D 416-81	Washer	VI	100-103	
D 416-83	Cone	VI	- -	
D 416-88	Screw	VI	- -	
DS 416-89	Washer	VI	- -	

NUMBER	DESIGNATION	Section	PAGE No.	REMARKS
D 416-93	Spring		100-103	
D 416-94a	Pillar		100	
D 416-96	Deflector		-	
D 416-97	Gasket	VI	-	
D 422-01b	Arm		103	
D 422-01c	Arm		-	
DS 422-01	Arm		-	
DS 422-01a	Arm		-	
DS 422-01f	Arm		-	
DS 422-01g	Arm		-	
DS 422-01h	Arm		-	
DS 422-01i	Arm		-	
DS 422-01r	Arm		-	
DS 422-01s	Arm		-	
DS 422-1b	Arm		-	
DS 422-1c	Arm		-	
DS 422-1d	Arm		-	
DS 422-1e	Arm		-	
DS 422-1f	Arm		-	
DS 422-1g	Arm		-	
D 422-2	Nut		-	
D 422-6	Nut		-	
D 422-79	Screw		-	
D 422-80b	Cup		100-103	
D 422-91	Gasket		103	
D 422-95c	Bush	VI	100-103	
D 422-96	Body		103	
D 422-98	Cap		-	
DS 422-98	Cap		-	
D 426-3	Nut		-	
D 426-5	Stub		104	
D 426-15	Distance piece		-	
D 426-89	Bush		-	
D 426-92	Stud	VI	100-104	
D 426-93a	Washer		104	
D 426-99	Lockwasher		-	
D 426-300 to D 426-342	Washer	VI	-	
DS 433-01c	Unit		140	
DS 433-02c	Unit		144	
D 433-82	Plug		163	
D 433-85	Sleeve		140	
D 433-90	Gasket		136-140-144	
D 433-92	Gasket		80	
D 434-02	Cylinder		140	
D 434-02b	Cylinder		144	
D 434-02d	Cylinder		140	
DS 434-02	Cylinder		-	

NUMBER	DESIGNATION	Section	PAGE No.	REMARKS
DS 434-02a	Cylinder		140	
DS 434-02d	Cylinder		144	
DS 434-04	Nut		140-144	
D 434-3	Rod		140	
D 434-3b	Rod		144	
DS 434-3	Rod		-	
DS 434-4d	Lever		100	
DS 434-4e	Lever		-	
DS 434-4f	Lever		-	
DS 434-4g	Lever		-	
D 434-5	Shield		140	
D 434-5a	Shield		-	
DS 434-57	Washer		-	
D 434-62a	Ring		75-140-144	
D 434-63	Ring		140-144	
D 434-65	Ring		- -	
D 434-67	Plate		144	
D 434-68	Pin		140	
D 434-70	Plug		163	
D 434-71	Distance piece	VI	100	
DS 434-71	Distance piece		-	
D 434-74a	Dust cover		144	
D 434-76a	Washer		140-144	
D 434-79a	Cup		- -	
D 434-80	Pin		144	
D 434-81	Dust cover		-	
D 434-86	Dust cover		140	
D 434-94a	Gasket		140-144	
D 434-95	Plug		163	
D 434-106	Shield		140	
D 434-107	Shield		-	
DS 435-02c	Corrector		140-144	
D 435-05a	Rod		144	
DM 435-05	Rod		-	
DS 435-05a	Rod		-	
D 435-11	Bar		104	
DS 435-11	Bar		-	
D 435-20	Diaphragm		140	
DF 435-21	Pipe		164	
D 435-22	Pipe assembly		159	
DS 435-22	Pipe assembly		-	
D 435-23a	Bar		140	
DS 435-23	Bar		-	
D 435-24	Pipe assembly		159	
DS 435-24a	Pipe assembly		-	
DF 435-25	Pipe		164	
DM 435-28	Pipe		-	
DF 435-30	Pipe assembly		-	
DS 435-30a	Pipe assembly		160	

NUMBER	DESIGNATION	Section	PAGE No.	REMARKS
DM 435-33	Plug	VI	164	
DM 435-34	Plug	VI	-	
DS 435-35	Pipe		160	
DS 435-36	Pipe		-	
DS 435-39a	Spring		140	
DS 435-40a	Spring		-	
DF 435-41	Pipe assembly		164	
DM 435-41	Pipe assembly		167	
DF 435-42	Pipe		-	
DF 435-43	Pipe		-	
DM 435-43	Pipe		-	
DF 435-44	Pipe		-	
D 435-51a	Rod		140	
DM 435-51b	Rod		-	
D 435-55	Bracket		-	
DS 435-55	Bracket		-	
DM 435-57	Plate		167	
D 435-58	Yoke		140	
D 435-58a	Yoke		-	
D 435-64	Cover		140-144	
DS 435-70	Collar		-	
D 435-80a	Cup		143	
D 435-82	Cup		-	
D 435-91	Plug	VI	163	
D 435-96	Cup		143	
D 435-99	Flange		104	
DS 435-110	Plate	VI	80	
DS 435-110a	Plate	VI	-	
D 435-111	Bearing	VI	143	
D 435-111a	Bearing	VI	-	
DS 435-112a	Bearing cap		-	
DS 435-112b	Bearing cap		-	
D 435-122	Bracket		144	
DS 435-125	Pipe assembly		160-167	
D 435-130a	Pipe		160	
DF 435-130	Pipe		167	
DS 435-136	Plate	VI	160	
DS 435-136a	Plate	VI	-	
D 435-139	Panel		252	
D 435-142a	Panel		144	
DM 435-142	Panel		-	
D 435-146	Panel		160	
DF 435-146a	Panel		167	
DS 435-146	Panel		160	
DS 435-147	Cup		143	
DS 435-148	Nut		-	
D 435-149	Sleeve		144-168-171	
D 435-150	Sheath		88-152-156-160-167	
D 435-151	Grommet		160	
D 435-153 to D 435-153g	Packing		143	
D 435-155	Lining	VI	144	
DM 435-165	Lining		167	
DS 435-167	Bush		143	
DS 435-168	Cup		-	
DS 435-169	Cup		-	
DS 435-172	Buffer		-	
DS 435-174	Bearing	VI	-	
DS 435-175	Sleeve		-	
D 436-06a	Damper		-	
D 436-06c	Damper		144	
DS 436-06c	Damper		-	
DS 436-07	Assembly	VI	-	
DS 436-07a	Assembly	VI	143	
D 436-95	Stud		143-144	
D 436-98	Nut		- -	
D 437-1	Buffer		104	
D 437-3	Buffer		100	
D 437-4	Bracket		168	
D 437-5	Cable	VI	-	
DM 437-5	Rod		171	
D 437-6	Lever		168	
DM 437-6	Lever		171	
D 437-7	Lever		168	
D 437-8	Rod		-	
DM 437-8a	Rod		171	
D 437-9	Rod		168	
DM 437-9	Rod		171	
D 437-54	End piece		168	
D 437-55	Rod		-	
DM 437-55	Rod		171	
D 437-56	Distance piece		168	
D 437-57	Pin		-	
D 437-67	End piece		-	
DM 437-73	Quadrant		171	
DM 437-80	Lever		-	
D 437-87	Bracket		168	
D 437-100	End piece		-	
D 437-101	Rod		-	
DM 437-101	Rod		171	
D 437-102	Plate		168	
DM 437-109	Bearing	VI	171	
D 437-110	Rod		168	
DM 437-110	Rod		171	
D 437-112	Nut		168	
DM 437-112	Nut	VI	171	
D 437-113	Pin		168	

NUMBER	DESIGNATION	Section	PAGE No.	REMARKS
DM 437-113	Pin		171	
DM 437-118a	Collar		-	
DM 437-119	Locknut	VI	-	
DM 437-123	Yoke		-	
D 441-01a	Bracket		107	
DS 441-01	Bracket		-	
DS 441-01a	Bracket		-	
D 441-1a	Wheel		-	
DS 441-1	Wheel		-	
DS 441-1a	Wheel		-	
DW 441-1	Wheel		-	
D 441-8	Bush		-	
D 441-9	Bush		-	
D 441-10	Spring		-	
D 441-12	Circlip	VI	-	
DS 441-12	Circlip	VI	-	
D 441-67	Bush		-	
DS 441-67	Bush		-	
DS 441-69	Collar		-	
D 441-76	Bracket		-	
DS 441-76	Bracket		-	
DS 441-76a	Bracket		-	
D 441-78	Washer		-	
D 441-80	Distance piece		-	
DS 441-83	Bush		-	
D 441-85	Washer		-	
D 441-85a	Washer		-	
D 441-87	Bush		-	
DS 441-87	Bush		-	
D 441-95	Sheath		-	
DM 441-100	Screw		-	
DS 442-01a	Pinion		115	
D 442-04	Casing		111	
D 442-04a	Casing		-	
DS 442-05b	Housing		-	
DS 442-014	Pinion		115	
DS 442-014a	Pinion		-	
D 442-1	Guide		111	
DS 442-2	Spring		-	
DS 442-3	Nut		-	
D 442-4	Rock		-	
D 442-8	Ball pin		-	
D 442-20	Sheath		-	
D 442-21	Nut	VI	-	
D 442-52	Cap		-	
DS 442-52	Cap		-	
D 442-58	Nut		-	
DM 442-58	Nut		-	
D 442-59	Locknut		-	

NUMBER	DESIGNATION	Section	PAGE No.	REMARKS
D 442-60	Washer		111	
D 442-68	Lockwasher	VI		
D 442-76	Guide		-	
D 442-79	Slide		-	
D 442-79a	Slide		-	
DS 442-89	Bush		-	
D 442-91	End piece		115	
D 442-93	Cap		111	
D 442-101	Distance piece		-	
D 442-120	Spring		116	
DS 442-300 to DS 442-364	Washer		111	
D 443-01	Rod		116	
D 443-01a	Rod		-	
D 443-03	Housing		-	
D 443-03a	Housing		-	
D 443-04	End piece		-	
DS 443-05	Housing		-	
D 443-06	Lever		-	
DS 443-06	Lever		-	
D 443-7	Bush	VI	-	
D 443-9	Lever		-	
D 443-9a	Lever		-	
DS 443-10	Sleeve		116-143	
D 443-11	Nut		112-116	
D 443-12	Shield		116	
D 443-12a	Shield		-	
DM 443-12	Shield		-	
DM 443-12a	Shield		-	
D 443-66	Nut		-	
DS 433-66	Nut		-	
D 443-67	Nut		-	
D 443-70	Clip		116-143	
DS 443-71	Washer		-	
D 443-73a	Shackle		-	
DS 443-73	Shackle		-	
D 443-74	Screw		116-132	
D 443-78	Bush		116	
DS 443-78	Protector		-	
D 443-83	Cap		-	
D 443-87	Nut		-	
D 443-88	Pin		-	
DS 443-88	Pin		-	
D 443-89	Washer		-	
D 443-89a	Washer		-	
DS 443-94	Cup	VI	-	
D 443-95	Gasket		-	
D 443-96	Pin		-	

NUMBER	DESIGNATION	Section	PAGE No.	REMARKS
DM 443-96	Pin		116	
D 444-01b	Control	N/Ls	115	
DS 444-02	Cap		-	
DS 444-02a	Cap		-	
D 444-3a	Cylinder		-	
DS 444-3	Cylinder		-	
DS 444-4	Rod		-	
D 444-6	Rod		112	
D 444-9	Fork		115	
D 444-12	Sheath		-	
DS 444-12	Sheath		-	
D 444-13	Gasket		112	
DS 444-18c	Piping		160-167	
DS 444-19	Pipe		167	
DS 444-62	Nut	VI	115	
DS 444-63	Gasket	VI	115-132	
DS 444-64	Gasket		76-115	
DS 444-64a	Gasket		115	
DS 444-65	Gasket		115-132	
DS 444-72	Washer		115	
DS 444-73	Plate	VI	-	
DS 444-75	Gasket		-	
D 444-76	Union		-	
D 444-78	Washer	VI	-	
D 444-80	Rod		112	
D 444-81	Circlip		-	
D 444-82	Piping		160	
DS 444-82a	Piping		167	
DS 444-85	Plate	VI	115	
DS 444-89	Screw		-	
D 444-90	Bush		-	
D 444-91	Needle	VI	-	
D 444-92	Gasket		-	
D 444-97a	Pin		112	
D 444-98a	Circlip		115	
D 444-99b to D 444-99h	Washer		-	
D 444-100	Bush		112	
DS 444-105	Washer		115	
DS 444-106	Gasket	VI	-	
DS 444-108	Gasket	VI	-	
DS 444-110	Gasket	VI	-	
D 445-1a	Cam		107	
DS 445-1	Cam		-	
D 445-2	Spring		-	
DS 445-2	Spring		-	
D 445-91	Collar		-	
D 445-94	Screw		108	

NUMBER	DESIGNATION	Section	PAGE No.	REMARKS
D 445-95	Washer	VI	108	
D 445-96	Washer		-	
D 445-97	Bush		-	
D 445-98	Bracket		-	
DS 451-03	Plate		128	
D 451-04b	Unit		119	
D 451-04c	Unit		-	
DM 451-04b	Unit		123	
DM 451-04c	Unit		-	
DM 451-04d	Unit		-	
DM 451-04e	Unit		-	
DS 451-2	Pin		128	
D 451-5a	Drum		104	
DS 451-5	Drum		-	
DS 451-15	Eccentric		128	
D 451-19b	Shoe		127	
D 451-19c	Shoe		-	
DS 451-19	Shoe		128	
D 451-20b	Shoe		127	
D 451-20c	Shoe		-	
DS 451-20	Shoe		128	
D 451-21a	Spring		127-128	
D 451-24	Cradle		119	
D 451-24a	Cradle		-	
DM 451-24b	Cradle		123	
DM 451-24c	Cradle		-	
D 451-26a	Backplate		127	
DS 451-31	Casing		119-123	
DS 451-31a	Casing		-	
DM 451-32a	Plate		-	
D 451-33	Bracket		-	
D 451-33a	Bracket		-	
D 451-37	Bracket		-	
D 451-38	Bracket		-	
D 451-39	Spring		119	
DS 451-43	Shoe		128	
DS 451-44	Shoe		-	
D 451-52	Pin		119-123	
D 451-55	Sheath		-	
D 451-58	Screw		-	
D 451-59	Ball pin		-	
DS 451-61	Plate		127-128	
D 451-65	Lockplate		119-123	
D 451-65a	Lockplate		-	
D 451-67	Bush	VI	-	
D 451-79	Spring		-	
DS 451-87	Pin		128	
DS 451-90	Lockplate		-	
D 451-91a	Drain ring		127-128	

NUMBER	DESIGNATION	Section	PAGE No.	REMARKS
D 451-102	Pin		119-123	
DS 451-103	Screw		- -	
DS 451-103a	Screw		- -	
DS 451-103b	Screw		- -	
D 451-105	Pad		- -	
D 451-106	Bracket	VI	- -	
D 451-110	Screw		127-128	
DM 452-1	Duct		119-123	
D 452-92	Crossmember		248	
DS 453-05	Cylinder		127-128	
D 453-08a	Piping		152	
DS 453-08	Piping		152-156	
D 453-010	Piping		152	
D 453-010a	Piping		-	
D 453-015	Piping		152-156	
DS 453-021d	Body		148	
DM 453-030	Carrier		123	
DM 453-030a	Carrier		-	
DM 453-030b	Carrier		119	
D 453-1a	Pedal		148	
DS 453-1a	Pedal		-	
D 453-9	Pipe assembly		-	
D 453-9a	Pipe assembly		-	
DF 453-9	Pipe assembly		-	
DS 453-9a	Pipe assembly		-	
D 453-15	Circlip		84-148	
D 453-16	Pipe assembly		152	
DF 453-16	Pipe assembly		156	
DF 453-16a	Pipe assembly		-	
DS 453-16	Pipe assembly		152	
DS 453-20	Cylinder		127-128	
D 453-21b	Piston		127	
DS 453-21a	Piston		128	
D 453-22	Spring		119	
D 453-24	Cap		127-128	
DM 453-24	Cap		128	
D 453-26	Screw		84-127	
D 453-36a	Bush		148	
DS 453-36	Bush		-	
DS 453-39	Plate		152	
DS 453-39a	Plate	VI	-	
DF 453-41	Piping	VI	156	
DS 453-44	Plate		152	
D 453-46	Piston	VI	119-123	
DM 453-46	Piston		123	
D 453-47	Rod		119-123	
D 453-48a	Piping		152	
DS 453-48	Piping		-	
DS 453-48a	Piping		-	

NUMBER	DESIGNATION	Section	PAGE No.	REMARKS
D 453-49	Piping		152	
DF 453-49	Piping		156	
DS 453-49a	Piping		152	
D 453-50	Piping		152-156	
D 453-51	Spring		148	
D 453-52	Gasket		-	
D 453-53	Washer		-	
DS 453-54	Plate	VI	-	
DS 453-54a	Plate		-	
DM 453-55a	Pipe		152-156	
DS 453-55	Pipe		152	
D 453-58	Screw		152-156	
D 453-60	Lining		152-156-160-167	
D 453-63	Cup		148	
D 453-69	Gasket		84-148	
DS 453-69	Gasket		148	
D 453-70	Cap		-	
D 453-72	Gasket	VI	84-127	
D 453-82	Lining		26-75-76-152-156-160-167	
DM 453-82	Bush	VI	156-167	
DM 453-82a	Bush	VI	53	
D 453-91c	Washer		148	
D 453-91d	Washer		-	
DS 453-94	Plate		152-156	
DS 453-95	Collar		- -	
D 453-97	Lining		148	
DS 453-97	Lining		-	
D 453-98	Carrier		-	
DS 453-98	Carrier		-	
D 453-104	Pin		119	
D 453-108	Plate		119-123	
DM 453-108	Plate		123	
D 453-115	Pin		148	
D 453-118	Circlip		127-128	
DS 453-119	Gasket		115-119-123-136	
DS 453-119a	Gasket		123	
D 453-120	Packing		119-123	
D 453-120a	Packing		- -	
DM 453-120	Packing		123	
DM 453-120a	Packing		-	
DM 453-120b	Packing		-	
DM 453-121	Protector	VI	156	
D 453-123	Circlip	VI	119-123	
D 453-127	Bush		119	
D 453-128	Screw		-	
D 453-130	Sleeve		155	
D 453-131	Plug	VI	163	
D 453-132	Plug	VI	-	

NUMBER	DESIGNATION	Section	PAGE No.	REMARKS
D 453-135	Plug		155-156	
D 453-136	Yoke		- -	
D 453-138	Grommet		155	
D 453-139	Plate		-	
D 453-141a	Plate		-	
D 453-141b	Plate		155-156	
D 453-144	Screw		-	
D 453-144a	Screw		26-53-155-156	
D 453-149	Sheath		155	
D 453-149a	Sheath		168	
D 453-150	Bush		155-156	
DF 453-152	Union		156	
DS 453-153	Plate		155	
D 453-154	Plate		-	
D 453-158	Screw		148	
D 453-159	Sheath		155	
DS 453-163	Pipe		156	
DS 453-168	Shield		155-156	
DS 453-170	Shield		- -	
D 453-173	Lining		- -	
D 453-177	Plate		155-156	
D 453-199	Pipe		155	
DM 453-199	Pipe		155-156	
DS 453-211	Ring		84-148	
DS 453-216a	Plate	VI	155-156	
D 454-07	Control		147	
DS 454-07	Control		-	
D 454-1a	Cable		-	
DM 454-11b	Push-rod		119-123	
DM 454-11c	Push-rod		- -	
D 454-12	Push-rod		119	
D 454-12a	Push-rod		-	
DM 454-12	Push-rod		124	
DM 454-12a	Push-rod		-	
D 454-13	Lever		119	
DM 454-13a	Lever		124	
DM 454-14	Lever		119-124	
DM 454-15a	Lever		- -	
D 454-16a	Cable	VI	147	
DS 454-18	Buffer		-	
D 454-22	Wheel		119-124	
D 454-22a	Wheel		- -	
DM 454-22	Wheel		120-124	
DM 454-22a	Wheel		- -	
D 454-25	Lock		147	
D 454-28	Spring		-	
DS 454-31	Grille	VI	-	
D 454-32	Buffer		-	
D 454-32a	Buffer		-	

NUMBER	DESIGNATION	Section	PAGE No.	REMARKS
D 454-33	Pawl	VI	120	
D 454-33a	Pawl	VI	-	
DM 454-33	Pawl	VI	120-124	
DM 454-33a	Pawl	VI	120 -	
DS 454-33	Pawl	VI	124	
DS 454-33a	Pawl	VI	-	
D 454-35	Pin		120-124	
DM 454-35	Pin		- -	
D 454-63	Lining		147	
D 454-66	Buffer		-	
D 454-71	Spindle		120-124	
D 454-72	Spring		- -	
D 454-74	Screw	VI	- -	
D 454-76	End piece		147	
D 454-77	Spring		120-124	
D 454-78	Spring		- -	
D 454-79	Plunger	VI	- -	
DM 454-89a	Circlip		124	
D 454-93	Disc		120-124	
D 454-94	Bush	VI	- -	
DS 454-95	Grommet	VI	147	
D 454-103	Link		-	
D 454-113	Grommet		-	
D 454-115	Spindle		-	
D 454-117	Lining		-	
D 454-118	Nut	VI	120-124	
D 454-127	Spring	VI	147	
D 454-142	Buffer		120	
DM 454-142	Buffer		124	
D 454-160	Cup		120-124	
D 456-0	Distributor		148	
DF 456-0	Distributor		-	
D 456-1	Body		-	
D 456-2	Cap		-	
D 456-3	Slide valve		151	
DF 456-3	Slide valve		-	
DS 456-3	Slide valve		-	
D 456-4	Trolley		-	
DS 456-50	Washer		-	
D 456-92	Plate		-	
D 456-93	Plate		-	
D 456-96	Spindle		-	
D 456-98	Spring		-	
DF 456-98	Spring		-	
DS 456-98	Spring		-	
D 456-99	Gasket		-	
DS 511-3	Wiring		241	
DS 511-3a	Wiring		-	
DS 511-3c	Wiring		242	

NUMBER	DESIGNATION	Section	PAGE No.	REMARKS
DS 511-5	Cabling		241	
DM 511-6	Cabling		-	
DM 511-6a	Cabling		-	
DS 511-6	Cabling		-	
DS 511-6a	Cabling		-	
DS 511-6b	Cabling		-	
DS 511-6c	Cabling		-	
DM 511-6f	Cabling		242	
DM 511-6g	Cabling		-	
DM 511-8	Cable		241	
DM 511-8a	Cable		-	
DM 511-8c	Cable		-	
DS 511-8	Cable		-	
DS 511-9	Cable		-	
DS 511-9a	Cabling		-	
DS 511-9b	Cabling		-	
DS 511-9c	Cabling		-	
DS 511-9f	Cabling		-	
DS 511-9g	Cabling		242	
DS 511-9h	Cabling		242	
DS 511-17	Cable		241	
DF 511-19	Wire		42-241-242	
DS 511-19	Cabling		241	
DS 511-23	Cabling		242	
DS 511-23a	Cabling		-	
DS 511-23b	Cabling		-	
DS 511-23g	Cabling		-	
DW 511-23	Cabling		-	
DS 511-24	Cabling		-	
DS 511-24a	Cabling		-	
DM 511-24m	Cabling		-	
DW 511-24	Cabling		-	
DW 511-24a	Cabling		-	
DM 511-25	Cabling		-	
DM 511-25a	Cabling		-	
DS 511-29	Cabling		-	
DS 511-29a	Cabling		-	
DM 511-63	Cabling		241-242	
D 511-66	Pipe		243	
D 511-76	Gutter	VI	-	
D 511-82	Pipe	VI	-	
D 511-83	Pipe		-	
DS 511-95	Bush		243	
D 511-97	Bush		243	
D 511-98	Bush		-	
D 511-7a	Holder	VI	-	
DM 511-14	Connector	VI	236	
DS 511-02a	Panel	VI	172	
DS 521-02c	Panel	VI	-	
DS 521-02d	Panel		-	

NUMBER	DESIGNATION	Section	PAGE No.	REMARKS
DS 521-02e	Panel	VI	176	
DW 521-02a	Panel	VI	180	
DW 521-02c	Panel	VI	-	
DW 521-02e	Panel	VI	-	
DW 521-02g	Panel	VI	-	
DS 521-03	Panel	VI	176	
DS 521-08	Panel	VI	172	
DS 521-08c	Panel	VI	-	
DS 521-1	Gauge	VI	-	
DS 521-1b	Gauge	VI	-	
DS 521-1c	Gauge	VI	-	
DW 521-1	Gauge	VI	180	
DS 521-2	Clock	VI	172-176	
D 521-3b	Cable	VI	-	
DS 521-3a	Cable	VI	-	
DS 521-3c	Cable	VI	-	
DW 521-4	Speedometer	VI	180	
DW 521-4a	Speedometer	VI	-	
DS 521-6	Ammeter	VI	172	
DS 521-6a	Ammeter	VI	-	
DS 521-6b	Ammeter	VI	-	
D 521-8	Plate		-	
DS 521-8	Plate	VI	176	
DS 521-10a	Ammeter	VI	-	
DS 521-11	Gauge	VI	172	
DS 521-12a	Gauge	VI	176	
DS 521-13a	Clock	VI	172	
DW 521-13	Clock	VI	176-180	
DW 521-15	Gauge	VI	180	
D 521-16	Clock	VI	179-183	
DM 521-83b	Cable	VI	172-176	
DW 521-83a	Cable	VI	180	
DS 521-84b	Cable	VI	172-176	
DW 521-84a	Cable	VI	180	
DS 521-85	Plate	VI	172-176	
DW 521-85	Plate	VI	180	
D 521-88	Spring	VI	172-176	
DW 521-93	Knob	VI	180	
D 521-94	Plate		172-176	
[illegible] 521-96	Bush	VI	170-176-180	
D 521-97	Washer		108-176-264	
D 521-98	Spring		172-176	
D 522-02	Switch	VI	-	
DW 522-02	Switch	VI	180	
DS 522-05	Switch	VI	172	
DS 522-05b	Switch	VI	176	
DS 522-05c	Switch	VI	-	
DW 522-05	Switch	VI	180	
D 522-6	Switch	VI	91-172-176-180	

NUMBER	DESIGNATION	Section	PAGE No.	REMARKS
D 522-7a	Switch	VI	172-176-232-236	
DM 522-7a	Switch	VI	172-232-236	
D 522-9a	Switch	VI	172-176	
DW 522-9	Switch	VI	180	
D 522-10a	Switch	VI	172-176-203-228	
DW 522-10	Switch	VI	180-228	
D 522-11	Switch	VI	172-176	
D 522-12a	Switch	VI	172	
DM 522-12	Switch	VI	176-180	
D 522-13a	Switch	VI	172-219	
D 522-13b	Switch	VI	179-183	
DS 522-13	Switch	VI	176-219	
D 522-18	Potentiometer	VI	179-183	
D 522-20	Knob	VI	179-183	
D 522-21	Switch	VI	-	
DM 523-1	Bracket	VI	243	
DM 523-4	Fuse	VI	-	
DM 523-6	Bracket	VI	-	
DW 523-6	Bracket	VI	-	
DM 523-99	Rubber	VI	-	
DS 523-98	Bracket	VI	-	
D 524-01a	Relay	VI	195-196	
DM 524-01a	Relay	VI	-	
DM 524-01b	Relay	VI	195-196-241	
DM 524-01c	Relay	VI	199-200-241	
DM 524-93	Clamp		-	
DM 524 98	Clamp		195-196	
DM 524-98a	Clamp		-	
DM 524-98b	Clamp		199-200	
DS 525-2	Control	VI	172	
DS 525-2b	Control	VI	172-176	
DS 525-c	Control	VI	176	
DS 525-2e	Control	VI	-	
DS 525-2f	Control	VI	-	
DW 525-2	Control	VI	180	
DS 525-99	Rubber		172-176	
D 531-2	Bracket		175	
DM 531-2	Bracket		-	
DM 531-a	Bracket		-	
DS 531-2d	Bracket		183	
D 531-3	Tray	VI	175	
DM 531-3	Tray	VI	-	
DM 531-7	Bracket		179	
DM 531-7a	Bracket		-	
DM 531-8	Tray	VI	183	
DS 531-8	Tray		179	
DM 531-72	Spring	VI	175-179	
DW 531-72	Spring		183	
DW 531-75	Tie-rod		-	

NUMBER	DESIGNATION	Section	PAGE No.	REMARKS
DS 531-76	Plate	VI	175	
D 531-83	Pipe	VI	175-183	
D 531-87	Tie-rod		175	
DM 531-87	Tie-rod		175-179	
DM 531-87a	Tie-rod		175-179-183	
D 531-89	Buffer		175	
D 531-92	Flange		-	
DS 531-92	Frame	VI	-	
DS 531-92b	Flange		-	
DS 531-92d	Frame	VI	179	
DS 531-92f	Frame		-	
DS 531-92g	Frame		-	
DS 531-92h	Frame		183	
D 532-0b	Dynamo	VI	187	
D 532-0c	Dynamo	VI	191	
DF 532-0	Dynamo	VI	187	
DF 532-0a	Dynamo	VI	191	
DS 532-0b	Dynamo	VI	187	
DS 532-0c	Dynamo	VI	191	
DS 532-0e	Dynamo	VI	-	
DS 532-0f	Dynamo	VI	187	
DS 532-0k	Dynamo	VI	-	
DS 532-0p	Dynamo	VI	-	
DS 532-0u	Dynamo	VI	188	
DF 532-03	Bearing	VI	191	
DS 532-0v	Dynamo	VI	192	
DS 532-03	End plate	VI	187	
DS 532-03b	End plate	VI	192	
DM 532-07	End plate	VI	191	
DS 532-07a	End plate	VI	188	
DS 532-07b	End plate		192	
DS 532-1	Casing	VI	187	
DS 532-1a	Casing	VI	191	
DS 532-1b	Casing	VI	-	
DF 532-4	Coils	VI	-	
DS 532-4	Coil	VI	187	
DS 532-4a	Coil	VI	191	
DS 532-4b	Coil	VI	187	
DS 532-4c	Coils	VI	188	
DS 532-4d	Coils	VI	192	
DW 532-10	Light	VI	180	
DS 532-11	Brush holder	VI	187	
DS 532-13	Bush	VI	188	
DF 532-15	Spring	VI	191	
DF 532-28	Armature	VI	-	
DM 532-28	Armature	VI	187	
DS 532-28	Armature	VI	-	
DS 532-28a	Armature	VI	191	
DS 532-28c	Armature	VI	188	

NUMBER	DESIGNATION	Section	PAGE No.	REMARKS
DS 532-28d	Armature	VI	192	
D 532-32a	Stay		187-191	
DS 532-32	Stay		187 -	
DS 532-32a	Stay		188-192	
DM 532-34	Pulley	VI	187	
DM 532-34a	Pulley	VI	191	
DS 532-34	Pulley	VI	187	
DS 532-34a	Pulley	VI	191	
DS 532-34b	Pulley	VI	187	
DS 532-34c	Pulley	VI	191	
DS 532-34d	Pulley	VI	188	
DS 532-34e	Pulley	VI	192	
DS 532-36a	Plate	VI	191	
DS 532-40	Bearing	VI	192	
DS 532-85	Washer		187-188-191	
DS 532-85a	Washer		-	
DS 532-85b	Washer		192	
DS 532-85c	Washer		-	
DS 532-87	Plate	VI	187	
DS 532-87a	Plate	VI	191	
DS 532-88	Bracket	VI	187	
DS 532-88a	Bracket	VI	191	
DS 532-89	Cabling	VI	187	
DS 532-89a	Cabling	VI	191	
DF 532-94	Rod	VI	-	
DS 532-94	Rod	VI	187	
DS 532-94a	Rod	VI	191	
DS 532-94c	Rod	VI	192	
D 533-01a	Starter	VI	195	
D 533-01b	Starter	VI	196	
DF 533-01	Starter	VI	200	
DM 533-01	Starter	VI	199	
DM 533-01a	Starter	VI	200	
D 533-1	Ring		17-195-196-199-200	
DM 533-2	Bush	VI	199	
DF 533-3	Housing	VI	200	
DM 533-3	Housing	VI	199	
DS 533-3	Housing	VI	195	
DS 533-3a	Housing	VI	196	
DS 533-6	Spring	VI	195-196-199-200	
DF 533-9	Coil	VI	200	
DM 533-9	Coil	VI	199	
DM 533-9a	Coil	VI	200	
DS 533-9	Coil	VI	195	
DS 533-9a	Coil	VI	196	
DF 533-11	Armature	VI	200	
DM 533-11	Armature	VI	199	
DM 533-11a	Armature	VI	200	
DS 533-11	Armature	VI	195	

NUMBER	DESIGNATION	Section	PAGE No.	REMARKS
DS 533-11a	Armature	VI	196	
DM 533-12	Bush	VI	199	
DF 533-13	Bearing	VI	200	
DM 533-13	Bearing	VI	199	
DS 533-13	Bearing	VI	195	
DS 533-13a	Bearing	VI	196	
DM 533-14	Bush Holder	VI	199	
DF 533-15	Brush	VI	200	
DF 533-15a	Brush	VI	-	
DM 533-15	Brush	VI	199	
DM 533-15a	Brush	VI	-	
DS 533-15	Brush	VI	195	
DS 533-15a	Brush	VI	-	
DS 533-15b	Brush	VI	196	
DS 533-15c	Brush	VI	-	
DM 533-16	Spring	VI	199	
DM 533-20	Terminal	VI	-	
DS 533-20	Terminal	VI	195	
DS 533-20a	Terminal	VI	196-200	
D 533-21b	Bendix	VI	195-196-199-200	
DF 533-22	Bearing	VI	200	
DM 533-22	Bearing	VI	199	
DS 533-22	Bearing	VI	196	
DS 533-23	Plate	VI	-	
DS 533-24	Sleeve	VI	195-196-199-200	
DS 533-25	Spring	VI	-	
DS 533-26	Pinion	VI	-	
DS 533-28	Sleeve	VI	-	
DF 533-40	Bush	VI	200	
DS 533-85	Washer	VI	195-196-199-200	
DS 533-88	Nut	VI	-	
DS 533-89	Washer	VI	-	
DS 533-90	Lockplate	VI	-	
DS 533-91	Bush	VI	-	
DF 533-97	Rod	VI	200	
DM 533-97	Rod	VI	199	
DM 535-1d	Regulator	VI	187-188-191-192	
DS 535-1a	Regulator	VI	187-191	
DS 535-1b	Regulator	VI	-	
DS 535-83	Bracket		187	
DM 535-89	Buffer		187-191-192	
D 535-98	Bracket		-	
DS 541-03	Bracket	VI	231	
DS 541-03a	Bracket	VI	-	
DS 541-03c	Bracket	VI	-	
DM 541-1c	Headlamp	VI	236	
DS 541-1a	Headlamp	VI	231	
DS 541-1b	Headlamp	VI	-	
DS 541-1g	Headlamp	VI	-	

NUMBER	DESIGNATION	Section	PAGE No.	REMARKS
DS 541-1i	Headlamp	VI	231	
DM 541-4	Glass	VI	236	
DS 541-4	Glass	VI	231	
DS 541-4a	Glass	VI	-	
DS 541-4b	Glass	VI	-	
DS 541-4c	Glass	VI	-	
DS 541-11	Cover	VI	-	
DS 541-11a	Cover	VI	-	
DS 541-11b	Cover	VI	-	
DS 541-12	Rim	VI	-	
DS 541-12a	Rim	VI	-	
DS 541-12b	Rim	VI	-	
DS 541-13	Bulb Holder	VI	231-236	
DS 541-13a	Bulb Holder	VI	231	
DS 541-13b	Connector	VI	-	
DS 541-13c	Rim	VI	-	
DS 541-97	Clip	VI	-	
D 541-99	Light	VI	172-176	
DM 544-02a	Lamp	VI	235	
DS 544-02	Lamp	VI	235A-239	
DW 544-02b	Lamp	VI	235	
DS 544-03	Lamp	VI	235A-239	
D 544-04a	Lamp	VI	232	
DM 544-011	Lamp	VI	235A-239	
DM 544-4	Cover	VI	235	
DS 544-5	Globe	VI	235A-239	
D 544-10	Light	VI	231-236	
D 544-11	Joint		-	
DS 544-12	Joint	VI	239	
DM 544-14	Plate	VI	235A-239	
D 545-2b	Interior Light	VI	235A	
D 545-2c	Interior Light	VI	-	
DS 545-3	Plate	VI	232-236	
D 545-4	Glass	VI	235A	
D 545-4a	Glass	VI	-	
DS 545-4a	Glass	VI	232-236	
DS 545-5	Pipe	VI	-	
DS 545-6	Plate	VI	-	
DS 545-6a	Plate	VI	-	
DS 545-7b	Housing	VI	-	
DS 545-8	Hook	VI	-	
DS 545-9	Unit	VI	-	
DS 545-10	Housing	VI	-	
DS 545-84	Bracket		-	
DS 545-87	Bracket		-	
DS 545-92	Plate	VI	-	
DS 545-93	Plate	VI	-	
D 551-1	Housing	VI	240	
DW 551-1	Housing	VI	-	
D 551-1	Bracket		-	

NUMBER	DESIGNATION	Section	PAGE No.	REMARKS
DW 551-2	Bracket	VI	240	
DW 551-2a	Bracket	VI	-	
D 551-3	Mirror	VI	-	
DW 551-3	Mirror	VI	-	
DW 551-3b	Mirror	VI	-	
D 551-4	Mirror	VI	-	
D 551-5	Housing	VI	-	
DW 551-5	Housing	VI	-	
D 551-6	Glass	VI	-	
D 551-7	Frame	VI	-	
D 551-86	Joint	VI	-	
D 551-87	Spring	VI	-	
D 551-88	Spindle	VI	-	
DW 551-92	Buffer		-	
DW 551-92a	Buffer		-	
DS 554-01	Sun visor		-	
DS 554-01d	Sun visor		-	
DS 554-01i	Sun visor		-	
DS 554-01k	Sun visor		-	
D 554-1	Screen		-	
D 554-1a	Screen		-	
DS 554-1a	Screen		-	
DS 554-1c	Screen		-	
DS 554-83	Spindle		-	
D 554-90	Plug	VI	-	
D 554-90a	Plug	VI	-	
D 554-91	Bearing	VI	-	
D 554-96	Sleeve	VI	-	
DS 554-97	Bracket		-	
DS 554-97a	Bracket		-	
D 561-01a	Motor	VI	203	
DS 561-01b	Motor	VI	208	
DS 561-01c	Motor	VI	-	
DS 561-01d	Motor	VI	-	
D 561-2	Motor	VI	203	
DS 561-2	Motor	VI	207	
DS 561-2a	Motor	VI	-	
DS 561-3	Pipe	VI	203	
D 561-6	Plate	VI	-	
DS 561-6	Plate	VI	207	
DS 561-7	Bracket	VI	-	
DS 561-8	Block	VI	-	
DS 561-51	Drive	VI	-	
DS 561-63	Lockplate	VI	208	
DW 561-63	Lockplate	VI	-	
DS 561-55	Joint	VI	207	
DS 561-66	Stud	VI	-	
DS 561-67	Plate	VI	-	
DS 561-68	Plate	VI	-	

NUMBER	DESIGNATION	Section	PAGE No.	REMARKS
DS 561-68a	Handle	VI	208	
DS 561-69	Washer	VI	207	
DS 561-70	Screw	VI	-	
DS 561-70a	Screw	VI	208	
DS 561-71	Locknut	VI	207	
DS 561-76	Nut	VI	-	
D 561-77	Screw	VI	203	
DS 561-77	Screw	VI	207	
DS 561-80	Washer	VI	-	
DS 561-81	Washer	VI	208	
DS 564-03a	Reservoir	VI	184	
DS 564-03b	Reservoir	VI	-	
DS 564-03c	Reservoir	VI	183	
DS 564-04	Cover	VI	184	
DM 564-07	Windscreen washer	VI	-	
DS 564-07b	Windscreen washer	VI	-	
D 564-1	Casing	VI	219	
D 564-2	Cover	VI	-	
D 564-3	Fan	VI	-	
D 564-5	Nozzle		-	
DW 564-5	Nozzle	VI	224	
D 564-6	Nozzle		219	
DW 564-6	Nozzle	VI	224	
DW 564-6a	Nozzle	VI	-	
D 564-7b	Motor	VI	219	
DS 564-7	Motor	VI	-	
DS 564-8	Jet	VI	184	
DS 564-8a	Jet	VI	-	
DS 564-8c	Jet	VI	183-184	
DS 564-8d	Jet	VI	-	
DM 564-9	Pump	VI	184	
DS 564-9	Pump	VI	-	
DW 564-9a	Pump	VI	183	
DM 564-46	Nozzle	VI	228	
DS 564-54	Joint	VI	184	
DS 564-54a	Joint	VI	183-184	
DS 564-55	Pipe	VI	184	
DS 564-55a	Pipe	VI	-	
DS 564-55b	Pipe	VI	183-184	
DS 564-56	Pipe	VI	184	
DS 564-57	Control	VI	-	
DS 564-58	Strainer	VI	-	
DS 564-59	Bracket	VI	-	
DW 564-60	Lining		224	
DW 564-65	Pipe	VI	-	
DW 564-65a	Pipe	VI	-	
DS 564-67a	Cover	VI	184	
DS 564-67b	Cover	VI	183	
DS 564-69	Screw	VI	184	
DS 564-70	Bracket	VI	-	

NUMBER	DESIGNATION	Section	PAGE No.	REMARKS
DS 564-71	Plug	VI	184	
DW 564-71	Union	VI	224	
DW 564-71a	Union	VI	-	
DS 564-72	Reservoir	VI	184	
DS 564-72a	Reservoir	VI	-	
DS 564-72b	Reservoir	VI	183	
D 564-74	Joint		219	
D 564-75	Plate		-	
D 564-76	Plate		-	
D 564-77	Screw		-	
D 564-78	Screw		-	
DM 564-78	Duct	VI	228	
D 564-79	Bush		219	
D 564-80	Plate		219-220	
DM 564-80	Finisher	VI	228	
DW 564-80	Finisher		224	
DW 564-80a	Finisher		-	
D 564-84	Duct	VI	219	
DW 564-84	Duct	VI	224	
D 564-85	Duct	VI	219	
DM 564-85	Joint	VI	228	
DM 564-87	Reinforcement	VI	-	
DS 564-101	Washer	VI	219	
DS 564-102	Washer	VI	-	
DM 564-103	Pipe	VI	183-184	
DM 564-105	Protector	VI	-	
DS 564-105	Protector	VI	184	
DW 564-114	Union		224	
D 565-0	Wiper	VI	203	
DS 565-0	Wiper	VI	207	
DS 565-0a	Wiper	VI	-	
DS 565-0c	Wiper	VI	208	
DW 565-0	Wiper	VI	-	
D 565-03	Control	VI	203	
DS 565-04a	Linkage	VI	208	
DW 565-04	Linkage	VI	-	
DS 565-06	Spindle	VI	203	
DS 565-07	Link	VI	-	
DS 565-2b	Arm	VI	203-207	
DS 565-2c	Arm	VI	-	
DS 565-2d	Arm	VI	208	
DS 565-2e	Arm	VI	-	
D 565-4	Link	VI	203	
D 565-4a	Link	VI	-	
D 565-5	Bracket	VI	-	
D 565-5a	Bracket	VI	-	
D 565-5	Bracket	VI	207	
DS 565-5a	Bracket	VI	-	
DS 565-5b	Bracket	VI	208	

NUMBER	DESIGNATION	Section	PAGE No.	REMARKS
DS 565-5c	Bracket	VI	208	
DW 565-5	Bracket	VI	-	
DW 565-5a	Bracket	VI	-	
DS 565-7a	Link	VI	-	
DW 565-7	Link	VI	-	
DS 565-10b	Wiper arm	VI	203-207	
DS 565-10c	Wiper arm	VI	-	
DS 565-10d	Wiper arm	VI	208	
DS 565-10e	Wiper arm	VI	-	
DS 565-12	Blade	VI	203-207	
DS 565-12a	Blade	VI	208	
D 565-13	Bracket	VI	203	
D 565-14	Plate	VI	-	
D 565-16	Plate	VI	-	
D 565-18	Link	VI	-	
DS 565-18	Link	VI	207	
D 565-21	Cap	VI	203	
DS 565-23	Link	VI	207	
D 565-51	Spring	VI	203	
D 565-52	Rod	VI	-	
D 565-57	Buffer	VI	-	
D 565-58	Bush	VI	203-224-228	
D 565-59	Stud	VI	203	
D 565-60	Spring	VI	-	
D 565-61	Pin	VI	-	
DS 565-65	Link	VI	208	
DW 565-65	Link	VI	-	
DS 565-66	Link	VI	207	
DS 565-66a	Link	VI	-	
DS 565-67	Yoke	VI	-	
D 565-68	Pin	VI	203	
D 565-70	Clip	VI	-	
DS 565-70	Clip	VI	203-207	
DS 565-70a	Clip	VI	208	
D 565-73	Washer		203	
D 565-76	Plate	VI	-	
DS 565-80	Stud	VI	-	
DS 565-89	Lockplate	VI	207	
DS 565-93	Bush	VI	208	
DS 565-94	Nut	VI	-	
D 565-95	Washer	VI	203	
D 565-96	Cap	VI	203-207	
DS 565-96	Cap	VI	208	
DS 565-97	Circlip	VI	-	
D 565-101	Bearing	VI	203	
D 565-102	Buffer		-	
DS 565-102	Buffer		208	
D 565-103a	Body	VI	203	
D 565-104	Bush		203-224-228	

NUMBER	DESIGNATION	Section	PAGE No.	REMARKS
D 565-105	Pipe	VI	203	
DS 565-113	Handle	VI	207	
D 565-115	Washer	VI	203-224-228	
DS 565-117	Buffer		204-297	
DS 565-117a	Buffer		204-207-208-297	
D 565-118	Buffer	VI	-	
D 571-1	Horn	VI	243	
DM 571-1	Horn	VI	244	
D 571-2	Horn	VI	243	
DM 571-2	Horn	VI	244	
DM 571-3	Horn	VI	-	
DM 571-4	Horn	VI	-	
DM 571-98	Blade		-	
D 571-99	Bracket		243	
D 571-99a	Bracket		-	
DM 571-99	Bracket		244	
D 575-1	Light	VI	232	
D 575-1a	Light	VI	-	
DS 575-1j	Light	VI	-	
DS 575-1k	Light	VI	-	
DS 575-1p	Light	VI	-	
DS 575-1q	Light	VI	-	
DS 575-2	Light	VI	-	
DS 575-2a	Light	VI	-	
DS 575-2h	Light	VI	235A	
DS 575-2i	Light	VI	-	
DM 575-3f	Light	VI	239	
DS 575-6	Housing	VI	232	
DS 575-6a	Housing	VI	-	
D 575-8b	Joint		-	
D 575-8c	Joint		-	
DM 575-8	Joint	VI	239	
DS 575-8	Joint		232	
DS 575-8f	Joint		-	
D 575-11	Spring	VI	235	
DM 575-13	Glass	VI	239	
DS 575-15b	Housing		235	
DS 575-15c	Housing		-	
DS 575-15f	Housing		239	
DS 575-15g	Housing		-	
DS 575-20	Cover	VI	235A	
DS 575-20a	Cover	VI	-	
DM 575-24	Light		239	
DM 575-26	Collar		-	
DS 575-28b	Reflector	VI	235	
DM 575-66	Housing		239	
DM 575-66a	Housing		-	
DS 575-68	Plate		235-289	
DS 575-68a	Plate		-	

NUMBER	DESIGNATION	Section	PAGE No.
DS 575-69	Plate		235-289
DS 575-69a	Plate		-
DS 575-73a	Joint	VI	239
D 575-91	Spring	VI	235
DS 575-92b	Hood		-
DS 575-92c	Hood		-
DS 575-92d	Hood		-
DS 575-92e	Hood		-
D 575-98	Light	VI	172-176
DS 575-103	Bracket		-
DS 575-103a	Bracket		-
DM 576-02a	Switch	VI	235-239
DS 576-02	Switch	VI	-
D 578-2a	Plate		212-216
D 578-93	Lining		-
DS 579-04	Reflector	VI	235 A
DS 579-04a	Reflector	VI	-
D 579-1	Reflector	VI	212
DS 579-1	Reflector	VI	212-235-239
DS 579-1a	Reflector	VI	-
D 579-2	Reflector	VI	212
DS 579-3	Joint	VI	212-239
D 579-98	Cup		212
DS 579-99b	Bracket		-
DS 579-99c	Bracket		-
DS 611-79	Spring	VI	91
DS 611-80	Plate	VI	-
DS 611-82	Dowel	VI	-
DS 611-90	Barrel	VI	-
DS 611-91	Bolt	VI	-
D 614-02b	Switch	VI	172-176
DF 614-02	Switch	VI	176
DF 614-02a	Switch	VI	176-183
DF 614-02b	Switch	VI	183
DS 614-09	Gauge	VI	176
DS 614-09a	Gauge	VI	-
D 614-89	Light	VI	172
DS 615-01a	Bumper		211
DS 615-01b	Bumper		215
DS 615-02a	Bumper		212
DS 615-02c	Bumper		-
DS 615-02d	Bumper		216
DS 615-011	Bumper		-
D 615-1	Bracket		211
D 615-1a	Bracket		-
D 615-7	Buffer		211-212-216
D 615-8b	Bracket		212
D 615-8c	Bracket		-
DS 615-8	Bracket		212-216

NUMBER	DESIGNATION	Section	PAGE No.
DS 615-8a	Bracket		212-216
DS 615-9a	Bumper		212
DS 615-9b	Bumper		216
DS 615-10a	Bumper		212
DS 615-10c	Bumper		216
DS 615-12	End piece		212
DS 615-12a	End piece		-
DS 615-12d	End piece	VI	216
DS 615-12e	End piece	VI	-
DS 615-13a	Bumper		211
DS 615-13b	Bumper		215
DS 615-14b	Half bumper		211
DS 615-14c	Half bumper		-
DS 615-14d	Half bumper		215
DS 612-14e	Half bumper		-
D 615-16	Plate		211-215
D 615-17	Bracket		211
D 615-17a	Bracket		-
DM 615-17	Bracket		-
DM 615-17a	Bracket		-
DS 615-17b	Bracket		215
DS 615-17c	Bracket		-
DS 615-18	End piece		211
DS 615-18a	End piece		-
DS 615-18d	End piece		215
DS 615-18e	End piece		-
D 615-19	Lining		212
D 615-19a	Lining		-
DS 615-26	Bumper		216
D 615-55	Case		211
D 615-55a	Case		-
DM 615-55	Bracket		-
DM 615-55a	Bracket		-
DS 615-55	Bracket		215
DS 615-55a	Bracket		-
DM 615-57	Reinforcement		211-215
D 615-61	Distance piece		211
D 615-62	Block		-
D 615-62a	Block		-
D 615-68	Circlip		211-215
D 615-73	Washer		211-212
D 615-75	Washer		211-212-216
DM 615-98	Bracket		211-215
DM 615-98a	Bracket		-
DS 621-1	Spanner	VI	246
DS 621-3	Tool		-
D 622-4	Strap		-
D 622-6	Strap		-
DS 622-7	Stand		-

NUMBER	DESIGNATION	Section	PAGE No.	REMARKS
D 622-8	Bolt		252	
DS 622-55	Spanner		246	
DS 622-99	Bracket		53-246	
D 622-100	Panel		248	
D 622-102a	Lining	VI	-	
D 622-106	Disc	VI	246	
D 623-0a	Jack	VI	-	
DS 623-0	Jack	VI	-	
D 623-61	Gusset		252	
D 623-61a	Gusset		-	
DS 625-96a	Strap		246-255-256	
DM 642-01	Valve	VI	223	
DS 642-01a	Valve	VI	219	
DW 642-01	Valve	VI	224	
DM 642-02	Unit	VI	224-228	
DM 642-04	Bulb	VI	223-228	
DM 642-011	Radiator	VI	224-228	
DM 642-012	Motor	VI	224-228	
DS 642-4	Diaphragm		219	
D 642-5	Bracket	VI	-	
DS 642-5	Bracket	VI	-	
D 642-6	Screw	VI	-	
DS 642-6	Screw	VI	-	
DS 642-7a	Pipe		224	
D 642-8	Plate		-	
DS 642-8	Plate		-	
DW 642-8	Plate	VI	224	
DM 642-9c	Plate		9-223	
DS 642-9	Pipe		219	
DS 642-9a	Pipe		224	
D 642-10	Plate	VI	-	
D 642-11	Radiator	VI	-	
D 642-12	Radiator	VI	-	
DS 642-12	Radiator	VI	223	
DM 642-14	Plate	VI	-	
DM 642-14a	Plate	VI	-	
DW 642-14	Plate	VI	224	
DW 642-15	Disc	VI	-	
D 642-17	Resistance	VI	223-227	
D 642-17a	Resistance	VI	223	
D 642-18	Casing	VI	223	
DM 642-19	Impellor	VI	224-228	
DM 642-20	Bracket	VI	-	
DM 642-21	Housing	VI	-	
DM 642-22	Volute	VI	-	
DM 642-30	Plate	VI	-	
DM 642-31	Joint	VI	-	
DS 642-32a	Pipe		220-224	
D 642-52	Support	VI	223-227	

NUMBER	DESIGNATION	Section	PAGE No.	REMARKS
DW 642-53	Buffer	VI	224	
DM 642-54	Pipe		228	
DM 642-55	Pipe		-	
DM 642-58	Protector	VI	-	
DM 642-60	Pipe	VI	-	
DS 642-61	Pipe		223	
DM 642-63	Bracket		224	
DS 642-66	Collar		220	
DM 642-68	Bracket		224	
DS 642-70	Pipe		223	
DS 642-71a	Plate		220	
DS 642-73a	Bracket		220-224	
DS 642-75	Joint	VI	220	
DS 642-75a	Joint	VI	220-224	
D 642-78	Plate		-	
DM 642-78	Plate	VI	224-228	
D 642-79	Lockplate		220	
D 642-80	Plate		-	
D 642-81	Plate		-	
D 642-82	Lockplate		-	
DS 642-82	Pipe		223	
DS 642-83	Joint		220	
DA 642-84	Pipe		224	
DS 642-84b	Pipe		53-220	
D 642-85	Pipe		-	
DM 642-85	Pipe		224	
DS 642-86	Pipe		220	
DS 642-87	Pipe		-	
D 642-88	Pipe		-	
DS 642-88a	Pipe		-	
DM 642-93	Body	VI	224	
DM 642-97	Pipe		228	
DM 642-98	Pipe		-	
D 643-02a	Grille		220	
DW 643-02	Grille	VI	224	
D 643-03a	Grille		220	
D 643-2	Duct		-	
D 643-2a	Duct		-	
DW 643-2	Duct		224	
D 643-5	Duct		220	
D 643-5a	Duct		-	
DW 643-5	Duct	VI	224	
DW 643-5a	Duct	VI	-	
DS 643-8	Duct		220	
DS 643-8c	Duct		223	
DW 643-11	Grille		224	
DW 643-17	Duct		-	
DW 643-17a	Duct		-	
DM 643-19	Grille	VI	-	
DM 643-52a	Duct		-	

NUMBER	DESIGNATION	Section	PAGE No.	REMARKS
D 643-66	Plate		220	
D 643-67	Plate		-	
DS 643-68	Surround		-	
D 643-80	Stay		-	
DM 643-82a	Duct	VI	224	
DM 643-88	Grille		-	
D 643-89	Lining	VI	220	
D 643-90	Duct		-	
DM 643-91a	Duct		224	
D 643-96	Duct		220	
D 643-112	Collar	VI	223-227	
DM 643-112	Collar	VI	224	
D 643-113	Collar	VI	223-227	
D 643-115	Duct	VI	-	
DW 643-115	Drive		224	
DM 643-116	Duct	VI	227	
DM 643-117	Plate		-	
DW 643-119	Plate		-	
D 643-135	Nozzle	VI	223-227	
D 643-137	Duct	VI	-	
DM 643-137	Duct		228	
D 643-138	Union	VI	223-227	
DM 643-138	Duct		228	
D 643-139	Duct	VI	223-227	
D 643-139a	Duct	VI	-	
DM 643-145	Duct	VI	228	
DM 643-146	Nozzle	VI	-	
D 643-149	Duct	VI	223-227	
DM 643-150	Protector	VI	228	
DM 643-150a	Protector	VI	-	
D 644-02	Shutter		220	
D 644-02a	Shutter		-	
DW 644-02	Shutter		227	
DW 644-2	Shutter		-	
DS 644-8	Shutter		220	
DW 644-17	Control		227	
DW 644-18	Control		-	
D 644-55	Spring		220	
D 644-55a	Spring		-	
DW 644-55	Spring		227	
D 644-56	Pin		220	
DM 644-61a	Shutter		227	
D 644-69	Spring		220	
DM 644-70	Distance piece		227-228	
DW 644-72	Cable	VI	227	
D 644-77	Spring		220	
D 644-84	Knob	VI	-	
DM 644-84	Cable	VI	227	
DW 644-84	Knob	VI	-	

NUMBER	DESIGNATION	Section	PAGE No.	REMARKS
D 644-86	Lever		220	
D 644-87	Lever		-	
DW 644-87	Lever		227	
DW 644-92	Knob	VI	-	
D 644-93	Cover	VI	223-227	
DM 644-94	Cable	VI	227	
DS 644-97	Knob	VI	220	
DW 644-119	Plunger	VI	227	
DS 651-2b	Housing		175-179	
DW 651-2	Housing		183	
DS 651-3a	Cover		179	
DW 651-3	Cover		183	
DW 651-4	Map pocket		-	
DS 651-8	Mirror	VI	175	
DW 651-57	Lining	VI	183	
D 651-59	Bracket		175-179	
DW 651-59	Clip		183	
D 651-52	Clip	VI	175	
DS 651-62	Clip	VI	179	
D 651-64a	Cover		175-179	
D 651-66	Hinge		-	
D 651-68	Hinge		-	
D 651-74	Bracket		-	
DW 651-74	Strap		183	
D 651-76	Spring		175-179	
DS 651-87	Panel		-	
DS 651-87a	Panel		-	
DW 651-88	Body	VI	183	
D 651-89	Spring		175-179	
DW 651-91	Buffer		183	
D 651-93	Pin		175-179	
DS 651-99	Hinge		179	
DS 651-100	Reinforcement		-	
D 651-101	Housing	VI	179-183	
D 652-2	Ash-tray	VI	175-179-183	
DW 652-2	Ash-tray	VI	183	
DW 652-72	Buffer	VI	-	
D 652-74	Cigar lighter	VI	179-183	
DW 652-74a	Cigar lighter	VI	183	
D 652-75	Ash-tray	VI	179-183	
D 652-75a	Ash-tray	VI	-	
D 652-78	Plate	VI	175-179-183	
D 652-90	Plate		172-176	
D 652-90a	Plate	VI	-	
D 652-92	Finisher	VI	175-176	
D 652-92a	Finisher	VI	-	
D 652-93	Ash-tray		175-176	
D 652-102	Escutcheon	VI	179-183	
DW 653-0a	Telephone	VI	245	

NUMBER	DESIGNATION	Section	PAGE No.	REMARKS
DW 653-01	Aerial	VI	245	
DW 653-05	Assembly	VI	-	
DW 653-1	Condenser	VI	-	
DW 653-10	Loud Speaker	VI	-	
DW 653-47	Surround	VI	-	
D 653-49	Microphone	VI	179-183	
DW 653-55	Grille	VI	245	
DW 653-56	Joint	VI	-	
DW 653-57	Protector	VI	-	
DW 653-58	Distance piece	VI	-	
DW 653-59	Protector	VI	-	
DW 653-60	Lead	VI	-	
DW 653-69	Staple	VI	-	
D 653-80	Grille	VI	179-183	
D 653-80a	Grille	VI	- -	
D 741-04a	Front unit		248	
DS 741-04	Front unit		-	
DS 741-04c	Front unit		-	
D 741-3	Front unit		-	
DS 741-3	Front unit		-	
D 741-5	Sidemember		-	
D 741-5a	Sidemember		-	
D 741-7	Crossmember		-	
D 741-58	Panel		-	
D 741-58a	Panel		-	
D 741-59	Panel		-	
D 741-59a	Panel		-	
D 741-77	Crossmember		-	
D 741-99	Panel		-	
D 741-100a	Sidemember		-	
DM 741-100	Sidemember		-	
D 741-106	Panel		-	
D 741-108	Felt		-	
D 741-109	Felt		-	
D 742-01	Rear unit		252	
D 742-97	Panel		-	
DM 743-1	Sidemember		-	
DM 743-1a	Sidemember		-	
D 743-2	Crossmember		-	
D 743-87	Lining		-	
D 743-87a	Lining		-	
D 743-91	Rubber	VI	223	
DM 744-3	Panel		252	
DS 744-128	Plug		-	
DS 744-129	Plug		-	
D 811-2a	Side rail		248-252	
DM 811-2	Side rail		- -	
D 811-67	Side rail		268	
D 811-75	Extension		-	
D 811-75a	Extension		-	

NUMBER	DESIGNATION	Section	PAGE No.	REMARKS
D 811-94	Side rail		268	
D 811-99	Side rail		-	
D 812-1	Pillar		252	
D 812-1a	Pillar		-	
D 812-2	Pillar		-	
D 812-2a	Pillar		-	
DS 812-2	Pillar		-	
DS 812-2a	Pillar		-	
D 812-72	Panel		248	
D 812-72a	Panel		-	
D 812-73	Panel		-	
D 812-73a	Panel		-	
D 812-79	Panel		252	
D 812-79a	Panel		-	
D 812-88	Pillar		248	
D 812-88a	Pillar		-	
D 812-90	Pillar		-	
D 812-90a	Pillar		-	
D 813-3	Crossmember		252	
D 813-9	Crossmember		-	
D 813-66	Panel		-	
D 813-67	Crossmember		-	
D 813-92	Crossmember	VI	277	
D 813-96	Crossmember	VI	-	
DM 814-64	Gusset		248	
D 814-88a	Gusset		-	
D 814-95	Gusset		252	
D 814-95a	Gusset		-	
D 814-97	Reinforcement		-	
D 814-97a	Reinforcement		-	
DS 821-9f	Panel		268	
DS 821-9g	Panel		-	
DS 921-10b	Panel		-	
DS 821-10c	Panel		-	
D 821-55	Lining		252	
D 821-55a	Lining		-	
D 821-73	Panel		-	
D 821-73a	Panel		-	
D 821-74	Wheelarch		-	
D 821-74a	Wheelarch		-	
D 821-91	Gusset		-	
D 821-91a	Gusset		-	
D 821-94	Panel		-	
D 821-94a	Panel		-	
DM 821-104b	Panel		268	
DM 821-104c	Panel		-	
D 822-03	Panel		293	
DS 822-04	Cover		294	
D 822-2	Panel		251	

NUMBER	DESIGNATION	Section	PAGE No.	REMARKS
D 822-2a	Panel		251	
DS 822-2	Panel		-	
DS 822-2a	Panel		-	
D 822-3	Panel		-	
DW 822-3	Panel		-	
D 822-5a	Cover		293	
DW 822-5	Panel		294	
D 822-6a	Dashboard		293	
DS 822-6	Panel		-	
DS 822-6a	Panel		-	
DW 822-6	Panel		294	
D 822-8	Surround	VI	293	
DW 822-8	Surround	VI	294	
D 822-9	Bracket		293	
DS 822-9	Bracket		-	
DW 822-41a	Lining		294	
DW 822-52	Packing	VI	-	
DW 822-52a	Packing	VI	-	
D 822-54	Plate		293	
DS 822-54	Panel		294	
DS 822-54a	Panel		-	
DS 822-59	Panel		-	
D 822-60	Reinforcement		293	
DW 822-60	Bracket		294	
DW 822-62	Packing		-	
D 822-63	Finisher		293	
DS 822-63f	Finisher	VI	294	
D 822-67	Rubber		293	
D 822-71	Plate	VI	-	
D 822-76	Bracket		-	
DS 822-76	Bracket		294	
DS 822-76a	Bracket		-	
DS 822-78	Washer		293	
DW 822-80	Packing		294	
DW 822-83	Spanner		-	
D 822-90	Plate	VI	293	
DW 822-99	Lining	VI	294	
D 822-103	Bracket		293	
D 822-131	Lining		-	
D 822-132	Lining		-	
D 822-135	Plate		-	
D 822-136	Plate		-	
DS 823-1a	Panel		252	
DS 823-1b	Panel		-	
DS 823-73	Panel		290	
D 825-3b	Roof		268	
DS 825-67	Rubber		268	
D 825-90	Washer		268	
D 825-91a	Lining		-	
DS 825-91	Rubber		-	

NUMBER	DESIGNATION	Section	PAGE No.	REMARKS
D 825-92	Screw	VI	211-212-268-272	
D 825-92a	Screw		268	
D 826-52	Nut	VI	277	
DM 826-53	Lining		289	
D 826-94	Frame	VI	277	
D 826-95	Plate	VI	-	
D 826-95a	Plate	VI	-	
D 831-01a	Panel		151	
DF 831-01	Panel		-	
DF 831-01b	Panel		-	
DS 831-01b	Panel		-	
D 831-1a	Panel		251	
DF 831-1a	Panel		-	
DS 841-02	Door		272	
DS 841-02a	Door		-	
D 841-8	Buffer		-	
DS 841-11	Hinge	VI	276	
DS 841-11a	Hinge	VI	-	
DS 841-13	Door	VI	-	
DS 841-13a	Door	VI	-	
D 841-15	Rubber		272	
DM 841-16	Lining	VI	-	
D 841-17	Panel		303	
D 841-18	Panel		-	
D 841-53	Plate		272	
D 841-53a	Plate		-	
D 841-55	Plate		-	
D 841-55a	Plate		-	
DS 841-56	Packing		-	
DS 841-56a	Packing		-	
DS 841-56b	Packing		-	
D 841-57	Edging		303	
D 841-57a	Edging		-	
D 841-58	Plate		272	
D 841-60	Packing		-	
D 841-60a	Packing		-	
D 841-66	Clamp		-	
D 841-66a	Clamp		-	
D 841-67	Lining		-	
D 841-67a	Lining		-	
D 841-68	Reinforcement		-	
D 841-68a	Reinforcement		-	
DS 841-68	Strip	VI	276	
D 841-74	Reinforcement		272	
D 841-74a	Reinforcement		-	
D 841-79	Clamp		-	
D 841-79a	Clamp		-	
D 841-81	Lining		-	
D 841-81a	Lining		-	

NUMBER	DESIGNATION	Section	PAGE No.	REMARKS
D 841-82	Flange		272	
D 841-83	Spring		-	
D 841-87	Stop	VI	-	
DS 841-90	Bracket		-	
DS 841-90a	Bracket		-	
D 841-91	Lining		-	
D 841-91a	Lining		-	
D 841-92	Bracket		-	
D 841-93	Screw		-	
DS 842-04	Door		-	
DS 842-04a	Door		-	
D 842-3	Rie-rod		-	
D 842-5	Spring		-	
D 842-15	Rubber		275	
DM 842-16	Lining	VI	-	
DS 842-17	Buffer		268	
DS 842-17a	Buffer		-	
D 842-18	Panel		303	
D 842-19	Panel		-	
D 842-56	Edging		303	
D 842-56a	Edging		-	
D 842-60	Plate		275	
D 842-61	Lining		-	
D 842-61a	Lining		-	
D 842-66	Pin		-	
D 842-67	Washer		-	
D 842-68	Roller	VI	-	
D 842-71	Pin		-	
D 842-73	Clamp		-	
D 842-73a	Clamp		-	
D 842-74	Clamp		-	
D 842-74a	Clamp		-	
D 842-78	Link		-	
D 842-79	Clamp			
D 842-88	Lining			
D 842-88a	Lining			
D 842-100	Plate			
D 842-100a	Plate			
DM 844-07	Hinge		289	
DM 844-07a	Hinge		-	
DS 844-013	Hinge	VI	290	
DS 844-013a	Hinge	VI	-	
DM 844-19	Door		289	
D 844-23	Joint		-	
D 844-23a	Joint		-	
DS 844-31	Door	VI	290	
D 844-52	Clamp		252	
D 844-56b	Stay		289	
D 844-56c	Stay		-	

NUMBER	DESIGNATION	Section	PAGE No.	REMARKS
DS 844-59	Spring		289	
DS 844-59a	Spring	VI	290	
D 844-61a	Stay		289	
D 844-72	Rubber		-	
DS 844-72	Lining	VI	290	
D 844-87	Rubber		289	
D 844-89	Rubber		-	
DS 851-03	Wing		263	
DS 851-03a	Wing		-	
D 851-4	Mudflap		255-256	
D 851-6	Bracket		260	
D 851-9	Mudflap		260-263	
D 851-9a	Mudflap		- -	
D 851-11	Mudflap		- -	
D 851-11a	Mudflap		- -	
DS 851-43	End piece	VI	263	
DS 851-43a	End piece	VI	-	
D 851-51	Rubber		250-263	
D 851-52	Bracket		255-256	
D 851-52a	Bracket		- -	
D 851-58	Washer		- -	
DM 851-60d	Wing		255	
DS 851-60a	Wing		-	
DS 851-60b	Wing		256	
DS 851-60c	Wing		-	
DS 851-60d	Wing		-	
DS 851-60e	Wing		-	
DW 851-60	Wing		-	
D 851-61	Washer		255-256	
D 851-62	Plate		255	
DS 851-62	Bracket		255-256	
DS 851-63	Spring		- -	
D 851-64	Bracket		255	
DM 851-67	Wing		260	
DM 851-67a	Wing		-	
DS 851-67b	Wing		263	
DS 851-67c	Wing		-	
D 851-68	Rubber		260-263-268	
D 851-70	Bracket		260-263	
D 851-72	Buffer		256-263	
DS 851-72	Circlip	VI	256	
D 851-77	Screw		260	
DS 851-77	Screw		263	
D 851-78	Peg		260-263	
D 851-79	Washer		-	
DS 851-79	Lining		256	
D 851-81	Rubber		260-263	
D 851-81a	Rubber		- -	
D 851-83	Rubber		255-256	

NUMBER	DESIGNATION	Section	PAGE No.	REMARKS
DS 851-85	Plate		212-216-263	
DS 851-86	Screw		255-256	
D 851-89	Rubber		- -	
DS 851-89	Shield		256	
D 851-91	Bracket		255-256	
D 851-95	Rubber		255-256	
DS 851-95	Strap		256	
D 851-100	Plate		260	
DS 851-100a	Plate		263	
DS 851-107	Distance piece	VI	256	
D 851-110	Reinforcement		260-263	
D 851-112	Plate		263	
D 851-113	Plate		255-256	
D 851-122	Plate		260-263	
D 851-124	Clamp		252	
D 851-124a	Clamp		-	
D 851-126	Rubber	VI	260-263	
D 851-131	Tie-rod		- -	
D 851-132	Rubber		255-256	
D 851-133	Bracket		- -	
D 851-133a	Bracket		- -	
D 851-134	Lockplate		- -	
D 851-135	Lockplate		- -	
DS 851-136	Plate		256	
D 851-138	Plate		255-256	
D 851-138a	Plate		- -	
D 851-142	Lining	VI	- -	
D 851-142a	Lining	VI	- -	
DS 851-149	Bracket		- -	
DS 851-151	Washer		- -	
DS 851-152	Grille		256	
DS 851-152a	Grille		-	
DS 851-152b	Grille		-	
DS 851-152c	Grille		-	
DS 851-157	Plate		263	
DS 851-159	Bracket		-	
DS 851-160	Socket		212-235-239-263	
DS 851-160a	Socket		- - - -	
D 852-05	Hinge		261	
D 852-05a	Hinge		-	
DS 852-07	Hinge		-	
DS 852-07a	Hinge		-	
DS 852-2b	Bonnet		-	
D 852-52	Plate		-	
DS 852-52	Plate		-	
D 852-64	Bracket		-	
D 852-64a	Bracket		-	
D 852-69	Buffer		-	
D 852-106	Stay		-	

NUMBER	DESIGNATION	Section	PAGE No.	REMARKS
DS 852-106	Stay		264	
D 852-116	Rubber		-	
DS 852-122	Catch		-	
DS 852-122a	Catch		-	
DS 852-123	Hook		-	
D 852-124	Lining		-	
DS 852-126	Strap		-	
DS 852-128	Pin		-	
D 853-1a	Panel		251	
D 853-56	Lining	VI	277	
D 853-59	Lining	VI	-	
D 853-60	Lining	VI	277	
DS 853-60	Rubber		251	
D 853-62	Lining	VI	277	
DS 853-62	Panel		252	
DS 853-62a	Panel		-	
DS 853-62b	Panel		-	
DS 853-62c	Panel		-	
D 853-63	Beading	VI	277	
DS 853-63	Panel		251	
DS 853-63a	Panel		-	
DS 853-63b	Panel		-	
DS 853-63c	Panel		-	
D 853-66	Rubber		289	
D 853-67	Rubber		293	
DS 853-69	Panel		-	
DW 853-69	Panel		294	
D 853-70	Plate		293	
DS 853-70	Plate		-	
D 853-71	Plate		-	
DM 853-75	Plate		294	
DS 853-76	Panel		293	
D 853-77	Panel		-	
DS 853-77	Panel		-	
DW 853-78	Panel		294	
DS 853-81	Rubber		260-263-275	
D 853-81	Rubber		260-275	
DS 853-90	Cover		251	
D 853-105	Band	VI	277	
D 853-106	Band	VI	-	
D 853-107	Lining	VI	-	
D 853-108	Lining	VI	-	
D 853-110	Panel	VI	277	
DS 853-111	Plate		293	
DS 854-3c	Embellisher		246	
D 854-4	Chevron		289	
DS 854-30	Beading	VI	276	
DS 854-31	Arm	VI	276	
DS 854-31a	Arm	VI	-	

NUMBER	DESIGNATION	Section	PAGE No.	REMARKS
DS 854-32	Panel	VI	276	
DS 854-32a	Panel	VI	-	
DS 854-33	Beading	VI	-	
DS 854-33a	Beading	VI	-	
DS 854-34	Lining	VI	-	
DS 854-34a	Lining	VI	-	
DS 854-35	Block	VI	263	
DS 854-35a	Block	VI	-	
DS 854-38	Cover joint	VI	304	
DS 854-39	Finisher	VI	304	
DS 854-39a	Finisher	VI	-	
DS 854-40	Beading	VI	276	
DS 854-40a	Beading	VI	-	
DS 854-41	Beading	VI	-	
DS 854-41a	Beading	VI	-	
DS 854-43	Beading	VI	263	
DS 854-43a	Beading	VI	-	
DS 854-44	Beading	VI	276	
DS 854-44a	Beading	VI	-	
DS 854-46	Finisher	VI	268	
DS 854-46a	Finisher	VI	-	
DS 854-47	Finisher	VI	-	
DS 854-47a	Finisher	VI	-	
DS 854-56	Rod	VI	277	
D 854-57	Rod	VI	-	
DS 854-72	Buffer		246	
DS 854-73	Plate		268	
DS 854-77	Washer		289	
DS 854-78	Buffer		246	
D 854-81	Grille	VI	277	
DS 854-81	Finisher		251	
DS 854-81a	Finisher		-	
DS 854-82	Finisher		268	
DS 854-82a	Finisher		-	
D 854-83	Finisher		-	
D 854-83a	Finisher		-	
D 854-83b	Finisher		-	
D 854-83c	Finisher		-	
DM 854-83	Finisher		-	
DM 854-83a	Finisher		271	
DS 854-83	Finisher		-	
DS 854-83a	Finisher		-	
DS 854-84	Finisher		-	
DS 854-84a	Finisher		-	
DS 854-84d	Finisher		-	
DS 854-84e	Finisher		-	
DS 854-85b	Edging		-	
DS 854-90a	Spring		246	
DS 854-91a	Cover joint		271	

NUMBER	DESIGNATION	Section	PAGE No.	REMARKS
DS 854-93b	Edging		271	
DS 854-93c	Edging		-	
DS 854-94	Edging		-	
DS 854-94a	Edging		-	
DS 854-94b	Edging		-	
DS 854-94c	Edging		-	
D 854-95	Beading	VI	276-277	
D 854-96	Beading	VI	- -	
D 861-05	Lock catch		264	
D 861-5	Lock	VI	278	
D 861-7	Lock	VI	-	
D 861-7a	Lock	VI	-	
DS 861-8	Handle		-	
DS 861-8a	Handle		-	
D 861-9	Lock	VI	-	
D 861-13	Set of barrels	VI	37	
DS 861-13	Set of barrels	VI	37-42-175-176-180-278-289	
D 861-16	Spring	VI	278	
DS 861-18	Button	VI	278-289	
DS 861-19a	Button		278	
DS 861-21	Spring		278-289	
D 861-22	Bolt		289	
D 861-23	Lockwasher		278	
D 861-24	Handle		-	
D 861-24a	Handle		-	
DS 861-33	Circlip	VI	278-289	
D 861-34	Spring		289	
D 861-36	Bolt		264	
D 861-37	Lock		-	
D 861-37a	Lock		-	
D 861-38	Control		-	
D 861-51	Washer		289	
D 861-53	Pin		-	
D 861-57	Plate		-	
DS 861-59b	Guide		-	
D 861-62	Pin		278	
D 861-63	Spring		-	
D 861-70	Rod		-	
D 861-74	Washer		-	
DS 861-76	Handle	VI	-	
DS 861-76a	Handle	VI	-	
D 861-79b	Plate	VI	-	
D 861-79c	Plate	VI	-	
D 861-84	Washer	VI	-	
D 861-98	Screw		-	
D 861-98a	Screw		-	
D 861-98b	Screw		289	
D 861-100	Spring	VI	278	

NUMBER	DESIGNATION	Section	PAGE No.	REMARKS
D 861-101	Nut		228-278-289	
D 861-102	Pin	VI	278-289	
D 861-104	Lockwasher		289	
D 861-105	Nut		-	
D 861-107	Housing		-	
D 861-109	Plate		-	
D 861-110	Buffer		-	
DS 861-112	Grommet		-	
D 861-116	Plate	VI	278	
D 861-117a	Pin		-	
D 861-118	Washer	VI	-	
D 861-119	Screw		-	
D 861-120	Washer	VI	-	
D 861-121	Escutcheon		-	
D 861-122	Cup		264	
D 861-123	Spring		-	
DS 861-129	Pipe	VI	289	
DS 861-132	Cup	VI	278-289	
D 861-136	Spring		264	
D 861-149	Plate		278	
D 861-150	Lever		264	
D 861-151	Cable	VI	-	
D 861-154	Plate		-	
D 861-155	Plate		-	
D 861-157	Sheath	VI	175-179-183	
D 861-158	Packing	VI	278	
D 861-158a	Packing	VI	-	
D 861-159	Sheath	VI	264	
D 861-162	Spring		-	
DS 861-165	Control		-	
DS 861-166	Bush		-	
DM 861-167	Trunnion	VI	-	
D 912-4	Lever		301	
D 912-4a	Lever		-	
D 912-10	Knob	VI	-	
DS 912-62	Spring case	VI	-	
D 912-66	Lining	VI	-	
D 912-78	Bracket		-	
D 912-79	Bracket		-	
D 912-80	Buffer		-	
D 912-85	Spring		-	
DM 922-118	Bracket		-	
DM 922-118a	Bracket		-	
DM 922-119	Buffer		-	
DS 923-2	Lining		302	
DS 923-2a	Lining		-	
DS 923-5	Lining		-	
DS 923-10	Lining		-	
DS 923-11	Lining		-	

NUMBER	DESIGNATION	Section	PAGE No.	REMARKS
D 923-21	Squab	VI	302	
D 923-22	Cushion	VI	-	
D 923-90a	Bush	VI	302	
D 923-91	Distance piece		-	
D 923-92	Cup		-	
D 923-100	Plate	VI	-	
D 923-107	Lug	VI	-	
D 923-107a	Lug	VI	-	
D 923-120	Yoke	VI	-	
D 923-121	Stud	VI	-	
DS 932-011	Seat		301	
DS 932-011a	Seat		-	
DS 932-3	Lining		302	
DS 932-3a	Lining		-	
DS 932-7	Lining		-	
DS 932-7a	Lining		302	
DS 932-9a	Knob	VI	301	
DS 932-21	Panel		301	
DS 932-24	Control	VI	-	
DS 932-24a	Control	VI	-	
DS 932-76	Lining		-	
DS 932-76a	Lining		-	
DS 932-76b	Lining		-	
DS 932-79a	Panel		-	
DS 932-81a	Pin		-	
DS 932-81b	Pin	VI	-	
DS 932-82	Pad	VI	-	
DS 932-82a	Pad	VI	-	
DS 932-84	Case		-	
DS 932-84a	Case		-	
DS 932-84c	Case		-	
DS 932-90	Case		-	
DS 932-90a	Case		-	
DS 932-99b	Casing	VI	-	
DS 932-99c	Casing	VI	-	
DS 932-118	Packing		-	
DS 932-119	Spring		-	
DS 932-119a	Spring		-	
DS 932-130	Ball pin	VI	-	
DS 932-140	Knob	VI	-	
D 941-1	Arm-rest	VI	303	
D 941-1a	Arm-rest	VI	-	
D 941-78	Lining		302	
D 941-2	Padding		303	
D 941-2a	Padding		-	
DS 941-82a	Arm-rest		302	
DS 941-91	Panel		-	
DS 942-73	Blade	VI	301	
DS 942-78	Head-rest		-	

NUMBER	DESIGNATION	Section	PAGE No.	REMARKS
DS 942-94	Head-rest		304	
DS 942-94a	Head-rest		304	
D 944-1	Handle	VI	277	
D 944-1a	Handle	VI	-	
D 944-98	Escutcheon	VI	-	
D 944-99	Escutcheon	VI	-	
D 961-08	Winder	VI	281-282-285-286	
D 961-08a	Winder	VI	- - - -	
D 961-016	Winder	VI	277	
D 961-2	Glass	VI	-	
D 961-3a	Glass	VI	297	
DS 961-3a	Glass	VI	-	
DS 961-4	Glass	VI	282	
DS 961-4a	Glass	VI	281	
DS 961-4b	Glass	VI	285	
DS 961-4c	Glass	VI	286	
DS 961-4d	Glass	VI	277	
DS 961-6	Glass	VI	282	
DS 961-6a	Glass	VI	281	
DS 961-6b	Glass	VI	285	
DS 961-6c	Glass	VI	286	
DS 961-7	Glass		297	
DS 961-7b	Glass	VI	-	
D 961-8	Channel		281	
D 961-8a	Channel		-	
DS 961-8	Channel		282	
DS 961-8a	Channel		-	
DS 961-8b	Channel		285-286	
DS 961-8c	Channel		- -	
D 961-9	Channel		281	
DS 961-9	Channel		282	
DS 961-9a	Channel		-	
DS 961-9b	Channel		285-286	
DS 961-9c	Channel		- -	
DM 961-17	Rubber		297	
DW 961-17	Rubber		-	
D 961-19	Lining	VI	281	
D 961-19a	Lining	VI	-	
DS 961-19	Lining	VI	282-285-286	
DS 961-19a	Lining	VI	- - -	
DS 961-23	Handle		281-282-285	
DW 961-23	Handle		282-285-286	
D 961-26	Escutcheon		281-282-285-286	
D 961-27	Rubber		297	
D 961-29	Rubber		-	
DS 961-30b	Lining		281-282-285-286	
DS 961-30c	Lining	VI	277	
DS 961-31c	Lining		281-282-285-286	
D. 961-36	Handle	VI	277	

NUMBER	DESIGNATION	Section	PAGE No.	REMARKS
D 961-48	Wiper	VI	277	
DS 961-48	Lining	VI	277	
DS 961-48a	Lining	VI	-	
D 961-49	Channel	VI	-	
D 961-53	Surround		271	
DS 961-56	Pressure pad		297	
DS 961-57	Guide		282-286	
DS 961-57a	Guide		- -	
DS 961-57b	Guide		285	
DS 961-57c	Guide		-	
D 961-59	Bracket		297	
DS 961-59	Bracket		-	
DS 961-59a	Bracket		-	
D 961-63	Reinforcement		297	
D 961-67	Washer	VI	281-282-285-286	
D 961-70	Buffer		281	
D 961-71	Buffer		-	
D 961-74	Rubber		281-282	
DS 961-74	Rubber		285	
D 961-74b	Rubber		286	
D 961-75	Surround		251-271	
D 961-75a	Surround		- -	
DS 961-79	Channel	VI	277	
DS 961-79a	Channel	VI	-	
D 961-80	Plug		251-275	
D 961-81	Guide		281	
D 961-81a	Guide		-	
DS 961-81	Guide		282-286	
DS 961-81a	Guide		- -	
DS 961-81b	Guide		285	
DS 961-81c	Guide		-	
D 961-83	Sealing	VI	277	
D 961-95	Plug		275	
D 961-98	Rubber	VI	297	
D 961-100	Eschutcheon	VI	277	
D 961-112	Lockwasher	VI	281-282-285-286	
D 961-113	Slide	VI	277	
D 961-115	Reinforcement		271	
DS 961-118	Packing		281-285	
DS 961-118a	Packing		- -	
D 961-123	Cup		281-282-285-286	
D 961-124	Spring		- - - -	
D 961-133	Pressure pad		297	
D 961-133a	Pressure pad		-	
DS 961-133	Pressure pad		-	
DS 961-133a	Pressure pad		-	
DS 961-134	Rubber		-	
DS 961-136	Lining		297	
D 961-137	Pressure pad	VI	281	

NUMBER	DESIGNATION	Section	PAGE No.	REMARKS
D 961-137a	Pressure pad		281	
DS 961-146	Rubber		297	
D 961-147	Reinforcement		271	
D 961-150	Pressure pad		297	
DS 961-150	Pressure pad		-	
DS 961-151	Rubber		-	
DS 961-161b	Surround		297	
DS 961-163	Pressure pad	VI	297	
DS 961-175	Slide	VI	282	
DS 961-175a	Slide	VI	-	
DS 961-175b	Slide	VI	285	
DS 961-175c	Slide	VI	-	
DS 961-175d	Slide	VI	286	
DS 961-175c	Slide	VI	-	
D 961-179	Spring	VI	277	
DS 961-180	Protector	VI	282-285-286	
DS 961-184	Screw		297	
DS 961-185	Washer	VI	-	
DS 961-189	Reinforcement		251-297	
DS 971-38	Handle	VI	304	
DS 971-39	Clip	VI	304	
DS 971-39a	Clip	VI	-	
DS 971-49	Pin	VI	-	
DS 971-50	Spring	VI	-	
DS 971-54	Spring	VI	-	
DS 971-56	Screw	VI	-	
DS 971-81	Beading	VI	304	
DS 971-81a	Beading	VI	-	
DS 971-01	Hood	VI	304	
DS 971-3	Cover	VI	-	
D 981-1a	Carpet		-	
DS 981-1b	Carpet		-	
DS 981-1c	Carpet		-	
DS 981-2a	Carpet		-	
D 981-7	Carpet	VI	-	
DS 981-7	Carpet	VI	-	
D 981-8	Carpet	VI	-	
DS 981-8	Carpet	VI	-	
DS 981-49	Lining	VI	276	
DS 981-67	Lining		298	
DS 981-67a	Lining		-	
D 981-70	Lining		-	
DF 981-70	Lining		-	
DS 981-78	Lining		-	
DS 981-78a	Lining		-	
DM 981-81	Lining		-	
DM 981-83	Lining		-	
DM 981-83a	Lining		-	
D 981-90	Plate		304	

NUMBER	DESIGNATION	Section	PAGE No.	REMARKS
DS 981-90	Plate		304	
DS 981-115	Clip		-	
DM 981-117	Frame		275	
DM 981-118	Frame		-	
DS 981-123	Plate		304	
D 981-133	Lining	VI	298	
D 981-133a	Lining	VI	-	
D 981-134	Lining	VI	-	
D 981-134a	Lining	VI	-	
DS 981-138	Clip	VI	304	
DS 981-44	Lining	VI	-	
DM 982-58	Lining		298-304	
DS 982-64	Lining		264	
DS 982-68b	Lining	VI	255-256	
DS 982-68c	Lining	VI	255-259	
DS 982-69b	Lining	VI	- -	
DS 982-69c	Lining	VI	- -	
DF 982-81	Lining		298-304	
DS 982-109	Lining		259	
DS 982-109a	Lining		-	
DW 982-109	Lining		-	
DS 983-10	Beading	VI	303	
DS 983-10a	Beading	VI	-	
DS 983-11	Beading	VI	-	
DS 983-11a	Beading	VI	-	
D 983-59	Panel		-	
D 983-71	Panel		-	
D 983-71a	Panel		-	
D 983-75	Panel		-	
DS 983-75	Panel		-	
DS 983-81	Plug	VI	303	
DS 984-3	Spanner	VI	293-294	
D 984-100	Set of covers		302	
D 981-100a	Set of covers		-	
DS 985-81	Panel	VI	298	
DM 985-86	Lining		-	
DF 985-98	Lining		298	
DS 985-98b	Lining		-	
DS 985-99	Lining		-	
D 986-95	Lining	VI	303	
D 986-95a	Lining	VI	-	
D 986-95d	Lining	VI	-	
D 986-95e	Lining	VI	-	
DM 987-1a	Lining		298	
D 987-2	Lining	VI	-	
DS 988-1	Rubber		271-298	
DS 988-1a	Rubber	VI	- -	
DS 988-2b	Lining		- -	
DS 988-2c	Lining		- -	

NUMBER	DESIGNATION	Section	PAGE No.	REMARKS
DS 988-3a	Lining		298	
DS 988-3b	Lining		-	
DM 989-1	Lining		-	
DS 989-93	Lining		-	
DS 989-93a	Lining		-	
DS 989-98	Lining		-	
DS 989-99	Lining		-	

SUPPLEMENTARY INDEX

NUMBER	DESIGNATION	Section	PAGE No.
4-S	Screw	R. III	239
62-S	Screw	R. III	37-60-147-204
63-S	Screw	R. III	13-26-37
64-S	Screw	R. III	88-155-156-264-293
65-S	Screw	R. III	26-37-42-219
76-S 30	Screw	R. III	30
79-S	Screw	R. VI	37
80-S	Screw	R. VI	37
83-S	Screw	R. III	136
104-S 30	Screw	R. III	204
122-S	Screw	R. III	168 - 219 - 293
123-S	Screw	R. III	26-53-168-260-263-264-293
124-S 30	Screw	R. III	30-95-108-171-219-228-232-236-255-259-275
125-S	Screw	R. III	37-42-120-124-271-297
125-S 30	Screw	R. III	108-120-124-143-144-155-260-263-293
126-S 30	Screw	R. III	168-187-188-191-192
127-S	Screw	R. III	168-171
129-S	Screw	R. III	80-108-143
131-S	Screw	R. III	42-195-196-199-200
134-S 30	Screw	R. III	168
135-S	Screw	R. III	30-42-136-302
155-S 30	Screw	R. III	151-212
156-S	Screw	R. III	215-216
183-S	Screw	R. III	104
185-S	Screw	R. III	228-239-293
189-S	Screw	R. III	30
190-S	Screw	R. III	30
297-S	Screw	R. III	42
299-S	Screw	R. III	88
304-S	Screw	R. III	251
305-S	Screw	R. III	84-88
306-S 30	Screw	R. III	208
308-S	Screw	R. III	160
308-S 30	Screw	R. III	63-204
321-S	Screw	R. III	88-151
362-S	Circlip	R. III	120-124
480-S	Screw	R. III	120-124-136-151
481-S	Screw	R. III	13-53-278-297
482-S	Screw	R. III	2-9-13-21-91-127-128-136-143-144-187-191-243-264
483-S	Screw	R. III	2-9-13-14-18-21-26-38-42-45-54-132-143-144-211-212-216-244-246-255-259
483-S 30	Screw	R. III	33-34-53-212
484-S	Screw	R. III	33-34-49-54-132-136
485-S	Screw	R. III	45-80-112-136
485-S 30	Screw	R. III	108-175-183-244-297
486-S	Screw	R. II	2-14-33-63
486-S 30	Screw	R. III	2-34-63-211-215-216
487-S	Screw	R. III	34-49-50-84-116-124-143
487-S 30	Screw	R. III	211-271-275
488-S	Screw	R. III	116
489-S	Screw	R. III	2-14-116-136-143-144
491-S	Screw	R. III	33-49
493-S	Screw	R. III	63
494-S	Screw	R. III	63-227
495-S	Screw	R. III	13-33
497-S	Screw	R. III	2-34
518-S 30	Screw	R. III	21-22
520-S	Screw	R. III	104
521-S	Screw	R. III	21-255-259
522-S	Screw	R. III	100
530-S 30	Screw	R. III	18-21-33-34-175-179
532-S	Screw	R. III	100-211
533-S 30	Screw	R. III	34
535-S	Screw	R. III	104
538-S	Screw	R. III	187-188-191-192-255-259
538-S 30	Screw	R. III	215
580-S	Screw	R. III	63
588-S	Screw	R. III	88
589-S	Screw	R. III	45-63
590-S	Screw	R. III	63
596-S	Screw	R. III	53
600-S	Screw	R. III	95
610-S 30	Screw	R. III	183
635-S	Stud	R. III	13-49-50

NUMBER	DESIGNATION	Section	PAGE No.
637-S	Stud	R.III	13
638-S	Stud		49
651-S	Stud	R.III	76
665-S	Screw	R.III	22
667-S	Screw	R.III	63
669-S	Screw	R.III	63
671-S	Screw	R.III	63
764-S	Screw	R.III	45
769-S	Screw	R.III	63
844-S	Screw	R.III	22
945-S	Screw	R.III	63
1.020-S	Screw	R.III	211-215
1.061-S	Grommet	R.III	232-236
1.062-S	Grommet	R.III	30-259
1.064-S	Grommet	R.III	60
1.065-S	Grommet	R.III	30-160
1.066-S	Grommet	R.III	160
1.381-S	Union	R.III	13
1.561-S	Union	R.III	13
1.797-S	Washer	R.VI	30
2.217-S	Washer	R.III	53-95-275
2.221-S	Nut	R.III	223
2.236-S	Nut	R.VI	38
2.262-S	Washer	R.III	245
2.269-S	Nut	R.III	26-38-42-88-155-156-168-184-245
2.270-S	Screw	R.VI	223-227-259
2.271-S	Nut	R.III	219
2.281-S	Screw	R.VI	245
2.284-S	Washer	R.VI	38
2.300-S	Nut	R.III	104
2.301-S	Nut	R.III	22-120-124
2.312-S	Washer	R.III	2-30-53-54-108-175-176-215-216-255-259-263-282-285-286-289-294-297
2.317-S	Nut	R.III	100
2.319-S	Nut	R.III	30-34-38-42-75-80-84-88-115-136-143-155-167-168-171-175-176-195-196-199-200-204-228-260-289
2.320-S	Nut	R.III	54-108-245-294

NUMBER	DESIGNATION	Section	PAGE No.
2.322-S	Nut	R.III	76
2.323-S	Nut	R.III	2-108-120-124-144-155-156-211-212-215-216
2.324-S	Nut	R.III	42
2.334-S	Washer	R.VI	30-38-204-255-259-264-281-290-293
2.335-S	Washer	R.VI	278
2.363-S	Washer	R.III	127-251
2.368-S	Nut	R.III	116
2.370-S	Nut	R.III	49-50-104
2.371-S	Nut	R.III	26-75-80-84-88-155-156-187-188-192-195-199
2.372-S	Nut	R.III	128-132
2.388-S	Washer	R.VI	278
2.389-S	Washer	R.VI	187-188-191-192
2.406-S	Screw	R.III	267
2.433-S	Nut	R.III	208
2.462-S	Washer	R.VI	30
2.466-S	Washer	R.VI	228
2.470-S	Washer	R.VI	2
2.475-S	Washer	R.VI	63
2.476-S	Joint	R.VI	13
2.478-S	Joint	R.VI	5-63
2.482-S	Washer	R.III	21-38-53-175-179-183-211-212-215-216-267-271-281-282-285-286
2.491-S	Nut	R.III	13-22-26-33-34-63-76-84-91-108-112-116-120-124-132-136-143-144-147-175-179-183-187-188-191-192-195-196-199-200-211-239-263-267-271-290-297
2.493-S	Nut	R.III	5-9-13-14-49-50-71-80-112-143-144-267-271-281-282-285-286-290

NUMBER	DESIGNATION	Section	PAGE No.
2.494-S	Nut	R.III	240
2.499-S	Screw	R.VI	224-227-271-303
2.502-S 30	Screw	R.VI	223-227-294
2.503-S	Nut	R.III	14-45-212-215-216-244
2.508-S	Screw	R.VI	293
2.514-S	Washer	R.VI	42-187-188-191-192-267-271-281-282-285-286
2.516-S 30	Screw	R.VI	215-216-278
2.524-S	Clip	R.III	30
2.548-S 30	Screw	R.VI	281-294
2.551-S	Nut	R.III	88-196-200
2.552-S	Nut	R.III	127
2.553-S	Nut	R.III	45
2.557-S	Clip	R.VI	53
2.559-S	Clip	R.VI	53
2.581-S	Screw	R.VI	275
2.582-S	Screw	R.VI	251-252-293
2.610-S	Screw	R.VI	223-243-282 285-286
2.611-S	Nut	R.III	76
2.613-S	Nut		50
2.652-S	Screw	R.VI	235-290
2.653-S	Screw	R.VI	293
2.654-S	Screw	R.VI	293-297
2.664-S	Screw	R.VI	228-293
2.665-S	Screw	R.VI	251-260-263
2.668-S	Screw	R.VI	143-175-176-212-216-219-223-227-232-235-236
2.669-S	Nut	R.III	211-215
2.673-S	Nut	R.III	181-191
2.694-S	Washer	R.VI	187-191-195-196-199-200
2.707-S	Ball	R.VI	108-112-136
2.709-S	Ball	R.VI	80-95
2.713-S	Ball	R.VI	80
2.714-S	Ball	R.VI	136
2.741-S	Screw	R.VI	120-124-147-255-259-260-263
2.746-S	Screw	R.VI	14-211-215-235-240-275
2.756-S	Screw	R.VI	227-245-267
2.813-S	Washer	R.VI	22-188-192

NUMBER	DESIGNATION	Section	PAGE No.
2.868-S	Clip	R.VI	228
2.985-S	Clip	R.VI	227-228
2.989-S	Clip	R.VI	13-53-76-136-223-227
2.994-S	Clip	R.VI	227
3.230-S	Washer	R.VI	275
3.232-S	Washer	R.III	293
3.234-S	Washer	R.III	281-282-285-286-290-293-297
3.298-S	Bush	R.VI	49-50
4.102-S	Ball	R.VI	116
4.104-S	Bearing	R.VI	136
4.106-S	Ball	R.VI	143-144
4.108-S	Ball	R.VI	144
4.112-S	Ball	R.VI	147
4.113-S	Bearing	R.VI	136
4.114-S	Ball	R.VI	80
4.151-S	Key	R.III	132
4.153-S	Key	R.VI	49-50
4.154-S	Key	R.III	187-188-191-195-196-199-200
4.737-S	Nipple	R.VI	18-49-95-100-143
4.902-S	Ring Seal	R.VI	75
4.903-S	Ring	R.VI	80-139
4.905-S	Ring	R.VI	80-84-132
4.907-S	Seal	R.VI	18-80
4.912-S	Ring Seal	R.VI	151-155
4.918-S	Ring Seal	R.VI	84
4.922-S	Ring	R.VI	76-80-84-88-115-151-155-156
4.924-S	Ring Seal	R.VI	63
4.925-S	Seal	R.VI	63
4.929-S	Ring	R.VI	26-84-132
4.930-S	Ring Seal	R.VI	132
4.938-S	Ring Seal	R.VI	80
4.960-S	Ring Seal	R.III	139
5.400-S	Nut	R.III	116

NUMBER	DESIGNATION	Section	PAGE No.
242	Packet	R.VI	1
1.352	Washer	R.I	211-212-216
2.338	Screw	R.III	34-120-263
2.659	Screw	R.III	38-80-84-91-144-155-215-216-223-227-255-259-260-263-267-275-290
3.732	Cable		241
3.733	Cable		241
3.736	Cable		241
6.278	Washer	R.IV	263-281-282-285-286
10.378	Key	R.I	45
10.530	Bearing	R.VI	95
12.685	Screw	R.I	45
18.372	Screw	R.III	260-263
39.827	Washer	R.IV	143-271
70.029	Button	R.VI	304
88.105	Key	R.II	17-18
88.294	Nut	R.II	195-196-199-200
88.523	Circlip	R.I	5
88.613	Washer	R.III	240-290
88.625	Washer	R.I	9
88.642	Washer	R.I	63
88.795	Plate	R.I	5-18
88.931	Plug	R.I	5
88.940	Dowel	R.I	5
88.963	Screw	R.I	45
89.114	Screw	R.III	227-228-267
89.149	Screw	R.III	38-167-267
89.156	Screw	R.III	139-167
89.274	Screw	R.III	53
89.475	Bearing	R.VI	18
89.500	Bearing	R.II	187-191
89.591	Screw	R.III	38-42-80-91-267
89.951	Bearing	R.VI	49
117.290	Plug	R.I	5
133.035	Stop	R.IV	290
232.932	Grommet	R.IV	251
233.400	Link	R.IV	227-255-259-290
295.502	Buffer	R.IV	275
302.771	Clip	R.VI	53
355.288	Cap	R.VI	139
355.297	Clip	R.II	139

NUMBER	DESIGNATION	Section	PAGE No.
355.874	Joint	R.VI	139
355.876	Cap	R.VI	139
392.629	Weight	R.VI	246
392.630	Weight	R.VI	246
392.631	Weight	R.VI	246
392.632	Spring	R.VI	246
408.451	Bearing	R.VI	72
431.442	Clamp	R.II	104
438.157	Cap	R.II	128
438.307	Nut	R.II	127
438.314	Bush	R.VI	127
438.320	Washer	R.II	208
438.508	Pin	R.II	127
438.510	Bush	R.II	127
438.511	Plate	R.II	127
438.516	Cam	R.II	127
438.586	Pin	R.II	127
438.606	Washer	R.II	127
438.607	Washer	R.II	127
438.608	Washer	R.II	127
438.630	Washer	R.II	127
441.332	Spring	R.II	127
441.333	Guide Pin	R.II	127
450.234	Locknut	R.I	45
451.343	Nut	R.I	18
451.374	Gasket	R.VI	5
451.379	Lubricator	R.I	5
451.397/02	Cotter	R.I	9
451.415	Nut	R.I	49
451.434	Screw	R.I	45
451.504	Plug	R.I	9
451.513	Tappet	R.I	18
451.672	Union	R.I	45
451.786	Nut	R.I	45
452.684	Housing	R.I	45
452.685	Cover	R.III	45
452.686	Filter	R.I	45
452.719	Filter	R.I	45
452.722	Distance Piece	R.I	45
452.723	Plate	R.I	45
453.117	Gasket	R.VI	45
453.173	Housing	R.III	38-42
456.399	Ring	R.VI	50
456.944	Dipstick	R.VI	5
456.998	Ring	R.I	9
457.159	Element	R.VI	5
457.160	Cap	R.VI	5
457.182	Cup	R.I	9
457.184/02	Cotter	R.I	9

NUMBER	DESIGNATION	Section	PAGE No.
457.208	Screw	R.III	38-42
457.220	Gasket	R.VI	45
457.281	Cap	R.VI	9
457.287	Cap	R.VI	9
457.295	Element	R.VI	9
457.298	Joint	R.VI	9
457.301	Nut	R.II	9
457.318	Deflector	R.I	18
457.347	Pinion	R.I	18
457.371	Spindle		45
457.372/02	Cotter	R.I	45
457.373	Pinion	R.I	45
457.374	Pinion	R.I	45
457.375	Shaft	R.I	45
457.376	Base	R.III	45
457.380	Bush	R.I	45
457.381	Piston	R.I	45
457.383	Housing	R.I	45
457.386	Pinion	R.I	45
457.456	Ring	R.I	17
457.468	Plate	R.I	9
457.469	Joint	R.VI	9
457.973	Casing	R.I	45
460.644	Circlip	R.I	17
461.113	Screw	R.I	9
461.125	Washer	R.I	17
461.143	Plate	R.I	5-18
461.178	Pinion	R.I	17
461.256	Chain	R.VI	18
461.492	Washer	R.I	18
461.493	Nut	R.I	18
461.494	Nut	R.VI	17
461.495	Washer	R.I	17
461.698	Nut	R.I	9
461.751	Washer	R.I	17
470.424	Gasket	R.VI	5
470.705	Washer	R.I	45
472.394/02	Ring	R.I	49-50
481.618	Clip	R.VI	13
490.708	Screw	R.I	63-143
491.041	Washer	R.VI	54
491.056	Nut	R.VI	54
493.081	Toggle	R.VI	54
493.108	Screw	R.I	63
493.114	Plate	R.VI	54
493.115	Screw	R.VI	54
500.367	Bearing	R.VI	71-72
500.614	Plunger	R.I	64
500.837	Bracket	R.I	63

NUMBER	DESIGNATION	Section	PAGE No.
501.002	Cap	R.I	71
508.093	Circlip	R.I	17-54
508.173	Dowel	R.VI	71
508.425	Spindle	R.I	72
508.426	Spindle	R.I	72
508.440	Screw	R.I	95
550.886	Joint	R.VI	139
585.698	Clip	R.III	227
586.877	Diaphragm	R.VI	30
595.022	Gasket	R.VI	30
595.157	Pipe	R.VI	30
595.386	Washer	R.VI	30
611.008	Plate	R.I	72
611.014	Washer	R.I	49-50
611.018	Washer	R.III	21
612.620	Seal	R.VI	100
612.621	Seal	R.VI	104
612.623	Sealing Ring	R.VI	104
613.006	Plug	R.I	71
613.007	Washer	R.I	63
613.158	Cap	R.VI	304
613.159	Catch	R.VI	304
614.000	Clip	R.VI	115-143-144
614.001	Clip	R.VI	75-143-144
614.002	Clip	R.VI	95-168-212-216-223
614.003	Clip	R.VI	112
614.004	Clip	R.VI	95
614.007	Clip	R.VI	30-75-76-144-155-160-223
614.009	Clip	R.VI	155
614.011	Clip	R.VI	143-144-223
614.012	Clip	R.VI	14
614.014	Clip	R.VI	53
614.015	Clip	R.VI	30
614.020	Clip	R.VI	223-227-228
614.029	Clip	R.VI	227
614.201	Nut	R.II	147
614.203	Nut	R.III	212-216
615.015	Nut	R.III	22
615.016	Nut	R.I	54
615.018	Nut	R.II	147
615.019	Nut	R.III	22
615.020	Nut	R.II	168
615.024	Nut	R.IV	275
615.025	Nut	R.III	22-188
615.028	Nut	R.VI	76
615.708	Nut	R.VI	293
615.710	Clip	R.VI	120-124-235-251-260-263

NUMBER	DESIGNATION	Section	PAGE No.
615.711	Nut	R.VI	180-187-191-231-236-294
615.712	Nut	R.VI	235
615.713	Nut	R.VI	212-215-240-293-294
615.714	Nut	R.VI	143-232-236
615.715	Nut	R.VI	232-236-267-282-285-286
615.720	Nut	R.VI	267
615.725	Nut	R.VI	294
615.730	Nut	R.VI	259
615.732	Nut	R.VI	251
615.747	Nut	R.VI	245
615.748	Nut	R.VI	224
616.000	Stud	R.I	13
616.011	Stud	R.I	49
616.013	Stud	R.I	84-88
616.014	Stud	R.I	49-50
616.023	Stud	R.I	63
616.026	Stud	R.I	88
616.028	Stud	R.I	80-84-88
616.036	Stud		9
616.037	Stud	R.I	9
616.038	Stud	R.I	9
616.039	Stud	R.I	9
616.040	Stud	R.I	9
616.051	Stud	R.I	9
616.053	Stud	R.I	9
616.057	Stud	R.I	9
616.058	Stud	R.I	26
617.004	Pin	R.VI	281-282-285-286
617.005	Pin	R.VI	5-17
617.254	Greaser	R.VI	54
617.800	Joint	R.I	84
618.700	Rivet	R.III	91-175-176-180
619.013	Washer	R.VI	204
619.022	Washer	R.III	215-216-251-260-263
619.024	Washer	R.II	21-132-215
619.037	Washer	R.III	240
619.047	Joint	R.VI	13-50
619.051	Washer	R.VI	128
619.052	Washer	R.VI	127
619.056	Washer	R.VI	240
619.066	Washer	R.IV	281-282-285-286
619.067	Washer	R.VI	255-259-281-282-285-286
619.068	Washer	R.IV	281-282-285-286

NUMBER	DESIGNATION	Section	PAGE No.
619.069	Washer	R.II	139-281-282-285-286
619.079	Washer	R.IV	260-290
619.083	Washer	R.IV	267
619.089	Washer	R.III	227-228
619.092	Washer	R.I	26
619.096	Washer	R.II	120-124
619.097	Washer	R.II	120-124
619.102	Washer	R.III	53
619.105	Washer	R.III	33-34
619.106	Washer	R.III	21-175-179
619.109	Washer	R.II	168
619.110	Washer	R.II	168
619.111	Washer	R.VI	168
619.122	Washer	R.III	212
619.133	Washer	R.IV	294
619.503	Washer	R.VI	294
619.754	Clip	R.VI	271
619.755	Clip	R.VI	255-259-267
619.756	Clip	R.VI	293
619.758	Clip	R.VI	160
619.760	Clip	R.VI	290
619.762	Clip	R.VI	303
619.763	Clip	R.VI	281-282-285-286
619.764	Clip	R.VI	259
619.766	Clip	R.VI	303
619.770	Circlip	R.VI	204
619.775	Clip	R.VI	275
619.778	Clip	R.VI	303
619.779	Clip	R.IV	275
619.784	Clip	R.VI	282-285-286
619.785	Clip	R.VI	271
619.793	Clip	R.VI	259
619.799	Clip	R.VI	53
619.809	Clip	R.VI	245
619.811	Clip	R.VI	227
620.047	Bearing	R.VI	71
620.049	Bearing	R.VI	100
620.050	Bearing	R.VI	100
620.052	Ring	R.VI	100
620.053	Bearing	R.VI	104
620.061	Race	R.III	116
620.066	Bearing	R.VI	120-124
620.067	Bearing	R.VI	112
620.068	Race	R.II	112
620.070	Bearing	R.II	104
620.072	Bearing	R.I	71
620.073	Bearing	R.VI	132

NUMBER	DESIGNATION	Section	PAGE No.
620.077	Bearing	R.VI	108
620.079	Bearing	R.II	104
620.080	Bearing		71
620.081	Cage	R.VI	71
620.082	Cage	R.VI	71
620.083	Cage	R.VI	71
620.087	Cage	R.VI	71
620.088	Bearing	R.I	71
620.110	Bearing	R.VI	18
620.111	Bearing	R.VI	17-50
620.115	Bearing	R.VI	100
620.125	Cage	R.VI	71
620.126	Bearing	R.VI	71
620.501	Ring	R.VI	17
620.502	Circlip	R.VI	80
620.503	Circlip	R.VI	71-124
621.027	Screw	R.III	21-33-34-53
621.029	Screw	R.I	49-50
621.035	Screw	R.IV	167
621.037	Screw	R.VI	100
621.042	Screw	R.II	139
621.043	Screw	R.I	5
621.045	Screw	R.II	143
621.048	Screw	R.II	120-124-301
621.049	Screw	R.III	223
621.050	Screw	R.IV	219-255-267-290
621.051	Screw	R.II	95
621.052	Screw	R.III	54
621.053	Screw	R.VI	26
621.054	Screw	R.II	120-124
621.055	Screw	R.I	84-91-151
621.058	Screw	R.IV	282-285-286
621.061	Screw	R.II	219
621.062	Screw	R.III	30-42-156-212-215-227-239-251-255-259
621.070	Screw	R.I	76
621.071	Screw	R.I	5
621.076	Screw	R.II	95
621.077	Screw	R.III	208
621.500	Screw	R.VI	281-282-285-290
621.505	Screw	R.VI	278
621.506	Screw	R.VI	294
621.509	Screw	R.VI	224
621.511	Screw	R.VI	180-294
622.551	Screw	R.I	26
622.801	Screw	R.III	195-196-199-223

NUMBER	DESIGNATION	Section	PAGE No.
624.001	Washer	R.VI	175-179-223-290-293
648.522	Pliers	R.VI	246
650.137	Screwdriver	R.VI	246
650.139	Spanner	R.VI	246
650.147	Spanner	R.VI	246
650.148	Spanner	R.VI	246
650.232	Spanner	R.VI	246
700.175	Oiler	R.VI	50
701.226	Screw	R.VI	195-196-199-200
701.316	Distance Bush	R.VI	195-196
701.325	Screw	R.III	195-196-199-200
701.798	Sleeve	R.VI	195-196-199-200
701.799	Pinion	R.VI	195-196-199-200
701.800	Spring	R.VI	195-196-199-200
701.801	Ring	R.VI	195-196-199-200
701.802	Circlip	R.VI	195-196-199-200
701.804	Sleeve	R.VI	195-196-199-200
701.805	Spring	R.VI	195-196-199-200
701.806	Circlip	R.VI	195-196-199-200
701.828	Spring	R.VI	195-196
701.829	Screw	R.VI	195-196-199-200
701.830	Drive	R.VI	195-196-199-200
701.831	Screw	R.VI	195-196-199-200
701.836	Bearing Plate	R.VI	195
701.842	Spring	R.VI	195
701.843	Brush Holder	R.VI	195
701.845	Bush	R.VI	195
701.846	Bush	R.VI	195
701.848	Circlip	R.VI	195-199
701.849	Thrust Washer	R.VI	195
701.854	Bush	R.VI	196-200
701.858	Bolt	R.VI	196
701.861	Brush Holder	R.VI	196-200
702.281	Brush	R.VI	187
702.283	Spring	R.VI	187
702.285	Holder	R.VI	187
702.288	Plate	R.VI	187
702.293	End Plate Complete	R.VI	191
702.295	Spring	R.VI	191
702.301	Brush Holder	R.VI	191
702.320	Assembling Rod	R.VI	195
702.328	Brush	R.VI	191
706.570	Bulb	R.VI	232-239
706.604	Bulb	R.VI	235-235A-239-
706.609	Bulb	R.VI	235-235A-239-
706.616	Bulb	R.VI	175-235
706.620	Bulb	R.VI	235-239

NUMBER	DESIGNATION	Section	PAGE No.	REMARKS
706.639	Bulb	R.VI	180-235	
706.670	Bulb	R.VI	231-236	
706.699	Bulb	R.VI	239	
706.700	Bulb	R.VI	239	
706.701	Bulb	R.VI	239	
706.703	Bulb	R.VI	239	
706.704	Bulb	R.VI	235A-239	
706.714	Bulb	R.VI	176	
706.715	Bulb	R.VI	180	
706.717	Bulb	R.VI	232	
706.721	Bulb	R.VI	231-236	
706.722	Bulb	R.VI	176	
706.723	Bulb	R.VI	231	
706.724	Bulb	R.VI	231	
706.726	Bulb	R.VI	180-231	
706.727	Bulb	R.VI	231	
706.729	Bulb	R.VI	231-236	
706.730	Bulb	R.VI	239	
706.732	Bulb	R.VI	235	
706.734	Bulb	R.VI	231-236	
707.193	Bulb	R.VI	175-232-236	
707.194	Bulb	R.VI	175-176-236	
707.255	Bulb	R.VI	175	
709.398	Coil	R.VI	42	
709.400	Coil	R.VI	42	
709.707	Condenser	R.VI	42	
709.788	Rubber Protector	R.VI	42	
710.005	Ring.....	R.III	42	
710.022	Special Nut.....	R.VI	243	
711.472	Eyelet.....	R.III	243	
722.429	Washer.....	R.III	243	
722.458	Junction Box	R.III	243	
722.592	Clip.....	R.VI	243	
722.593	Clip.....	R.VI	243	
730.007	Dowel	R.I	5	
803.630	Collar.....	R.IV	30	
804.104	Cap	R.VI	223-227	
921.552	Cable.....		241	

NUMBER	DESIGNATION	Section	PAGE No.	REMARKS
A 121-80	Seal	R.VI	2	
A 132-1	Plug		2	
A 141-4	Nut		33-34	
A 174-84	Joint	R.VI	10-29	
A 175-14	Washer	R.VI	29	
A 212-01a	Coil	R.VI	37	
A 212-54	End Piece	R.VI	37	
A 212-73f	Bracket		37	
A 212-73g	Bracket		37	
A 212-77a	Protection Sleeve	R.VI	37-41	
A 225-86	Union		45	
A 225-87	Joint	R. VI	45	
A 331-5	Plug		60	
A 381-96	Locking Piece		60	
A 442-83	Guide Nut		111	
A 451-3	Pin		128	
A 451-16	Cam		128	
A 451-80	Tube		92	
A 451-83	Guide Pin		128	
A 451-85	Spring	R.VI	128	
A 451-86	Distance Piece		128	
A 453-26	Screw		25-76-127-128	
A 453-28	Cap	R.VI	25-76-83-127-128	
A 453-72	Joint		45	
A 512-3	Terminal		243	
A 512-3b	Socket	R.VI	243	
A 512-4a	Plug	R.VI	243	
A 512-5b	Sleeve	R.VI	243	
A 522-9	Switch	R.VI	183	
A 533-17b	Spring	R.VI	196-200	
A 565-97	Circlip	R.VI	203	
A 565-98	Washer	R.VI	203	
A 615-84	Buffer		53-212-216-263	
A 961-53	Catch		264	
AM 532-03	End Plate	R.VI	188	
AM 532-11	Brush Holder	R.VI	188	
AM 532-15	Spring	R.VI	188	
AM 532-15a	Spring	R.VI	192	
AM 532-19b	Brush	R.VI	192	
AM 532-19c	Brush	R.VI	188	
AM 532-41a	Nut	R.VI	192	
AM 532-84	Key	R.VI	192	
AM 532-94	Rod	R.VI	188	
H 426-94	Screw		281	

ENGINE-I

NUMBER	INLET MANIFOLD	CLUTCH CONTROL	DAMPER	CRANKCASE	REMARKS
DS 1-03	Exterior	Low pressure pump	without	DS 114-5d	Until July 1959. No longer supplied.
DS 1-03b	Integral	-	-	-	July 1959 - September 1960. No longer supplied.
DS 1-03c	-	Centrifugal regulator	-		September 1960 - March 1961. No longer supplied.
DS 1-03f	-	-	with	-	March 1961 - July 1961. No longer supplied.
DS 1-03e	-	-	-	DM 114-5a	Since July 1961.

Note - The engines are supplied :

WITH: clutch.

WITHOUT: manifold or inlet housing, exhaust manifold, water pump, lateral supports, oil dipstick, spark plugs, breather, distributor, starter motor, dynamo or petrol pump.

JOINTS FOR ENGINE

NUMBER	DESCRIPTION	REMARKS
242	Packet of joints for engine comprising: all the joints normally used in re-assembling an engine (except C/A, Hugo-Reinz and rubber) (R. VI).	

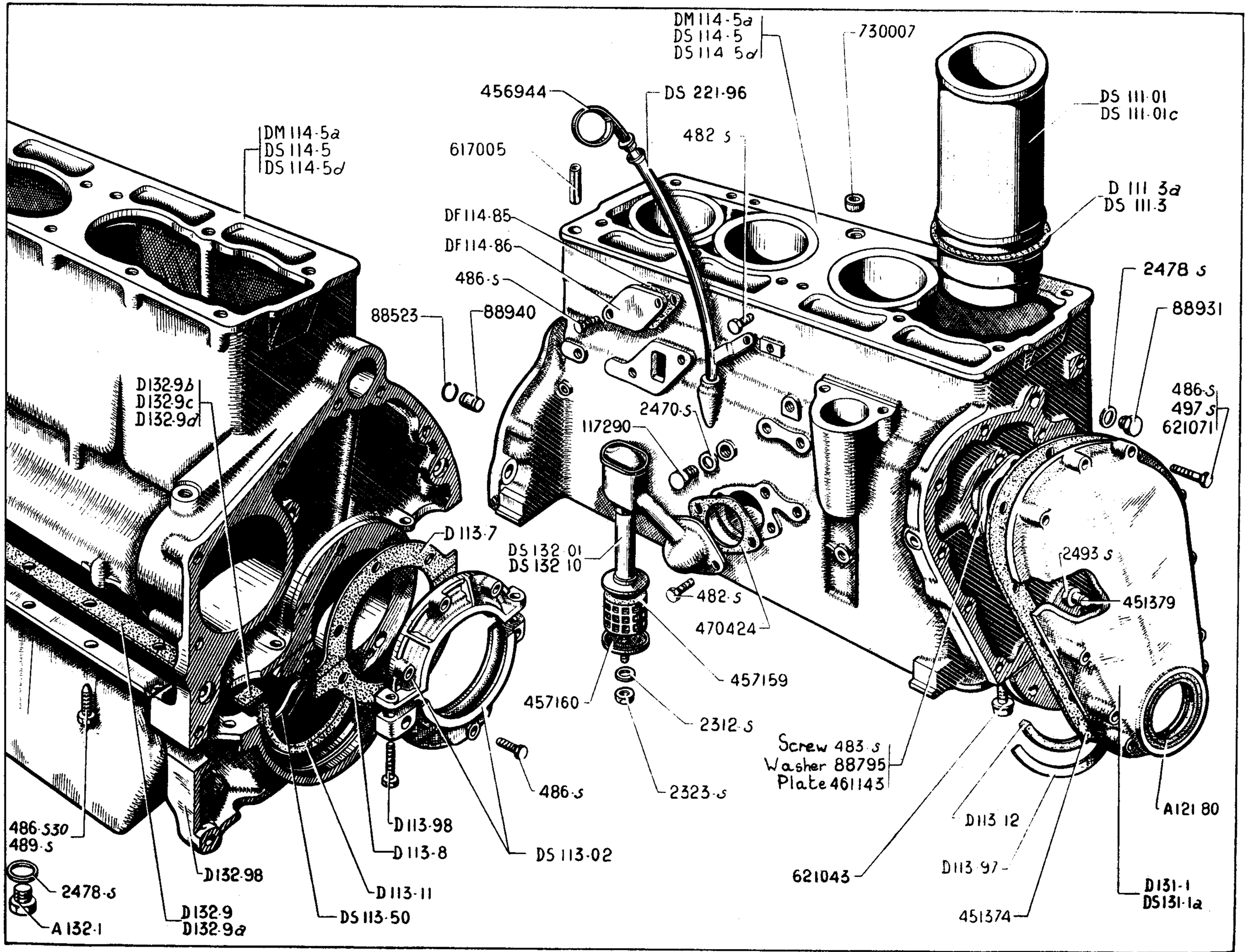
DM 114-5a
DS 114-5
DS 114 5d
730007
456944
DS 221-96
DS 111-01
DS 111-01c
482 s
617005
D 111 3a
DS 111-3
DM 114-5a
DS 114-5
DS 114-5d
DF 114-85
DF 114-86
486-s
2478 s
88931
88523
88940
D132-9b
D132-9c
D132-9d
486-s
497 s
621071
2470-s
117290
D 113-7
DS 132 01
DS 132 10
2493 s
482-s
451379
470424
457159
457160
2312-s
Screw 483 s
Washer 88795
Plate 461143
486-s
2323-s
A121 80
D113 12
486-S30
489-s
D113-98
D113-8
DS 113-02
D132-98
D113-11
2478-s
621043
D113 97
D131-1
DS131-1a
D132-9
D132-9a
DS 113-50
A 132-1
451374

NUMBER	DESCRIPTION	No. OFF
A 121-80	Sealing bush for damper on timing cover (48 x 65.2 x 10) (R. VI). Since March 1961.	1
A 132-1	Drain plug, hex. 16 diameter 150 pitch for sump.	1
DS 111-01	Set of four cylinder barrels with pistons, rings, gudgeon pins and joints (flat top pistons). Until March 1961.	1
DS 111-01c	Set of four cylinder barrels with pistons, rings, gudgeon pins and joints (convex pistons, damper assembly) Since March 1961.	1
D 111-3a	Paper joint between cylinder and cylinder barrel (light chestnut colour) (R. VI). Until October 1956.	4
DS 111-3	Paper joint between cylinder and cylinder barrel (light blue colour) (R. VI). Since October 1956.	4
DS 113-02	Oil baffle - upper and lower halves.	1
D 113-7	Gasket for oil baffle, upper (3 holes 8 mm diameter) (R. VI). Until February 1957.	1
D 113-8	Gasket for oil baffle, lower (3 holes 8 mm diameter, 2 holes 12 mm diameter) (R. VI). Until February 1957.	1
D 113-11	Joint for bearing cap - flywheel end (section 6.5 x 8) (R. VI).	1
D 113-12	Joint for bearing cap - timing case end (section 6.5 x 8) (R. VI).	1
DS 113-50	Oil return pipe from bearing cap, flywheel end.	1
D 113-97	Oil seal retaining plate, 0.5 mm thick 6.5 mm wide.	1

NUMBER	DESCRIPTION	No. OFF
D 113-98	Screw, Hex. head 5 diameter 25 long for assembling oil baffle.	2
DM 114-5a	Cylinder block, without cylinder barrels, distance between thrust faces of the bearing rings, timing gear side 37.7 mm. Since July 1961.	1
DS 114-5	*Cylinder block, without cylinder barrels, distance between thrust faces of the bearing rings, timing gear side 35·9 mm. Until January 1961. Replaced by DS 114-5d. See Technical Note No. 739.*	1
DS 114-5d	Cylinder block, without cylinder barrels, distance between thrust faces of the bearing rings, timing gear side 37.7 mm (supplied with 1 bearing ring DS 113-91c). January 1961 - July 1961.	1
DF 114-85	Joint for closing plate on cylinder block (R. VI). Since July 1961.	1
DF 114-86	Closing plate on cylinder block. Since July 1961.	1
D 131-1	Timing case. Until March 1961.	1
DS 131-1a	Timing case, 65 mm bore for damper. Since March 1961.	1
DS 132-01	Breather with filter element. All types. Until August 1956. Export. Since August 1956.	1
	Gasket for engine crankcase (paper and cork) (R. VI). Until February 1959.	
D 132-9	Left Hand.	1
D 132-9a	Right Hand.	1
	Gasket for engine crankcase (cork) (R. VI). Since February 1959.	
D 132-9b	Left-hand, timing gear end (22 x 26.5 x 3).	1

NUMBER	DESCRIPTION	No. OFF
D 132-9c	Right hand, timing gear end (14.5 x 22 x 3).	1
D 132-9d	Right and left-hand, flywheel end (15.5 x 22 x 3).	2
DS 132-10	Breather without filter element (R. VI). Since August 1956.	1
D 132-98	Engine sump, aluminium.	1
DS 221-96	Support tube for oil dipstick (R. VI).	1
482-S	Screw, hex. head, 7 diameter 12.5 long (R. III) securing:	
	- support tube for oil dipstick.	1
	- breather.	2
483-S	Screw, hex. head, 7 diameter 15 long, securing camshaft thrust plate (R. III).	2
486-S	Screw, hex. head, 7 diameter 22.5 long (R. III) securing:	
	- oil baffle.	6
	- timing case.	1
	- closing plate.	2
486-S 30	Screw, hex. head, pointed 7 diameter 22.5 long, securing engine sump (R. III).	10
489-S	Screw, hex. head, pointed, 7 diameter 30 long, securing engine sump (R. III).	4
497-S	Screw, hex. head, 7 diameter 50 long, securing timing case (R. III). Until March 1959.	11
2.312-S	Washer, 5.5 x 12. under nut securing filter element (R. III). All types. Until August 1956. Export. Since August 1956.	1
2.323-S	Nut, hex., 5 diameter 75 pitch, securing filter element (R. III). All types. Until August 1956. Export. Since August 1956.	1
2.470-S	C and A gasket 12.2 x 17 x 2 for water drain plug (R. VI).	1

NUMBER	DESCRIPTION	No. OFF
2.478-S	C and A joint 16.3 x 22 x 2 for plug (R. VI):	
	- for oil circulation	2
	- for draining sump	1
2.493-S	Nut, hex. 7 diameter 100 pitch, locking timing chain lubricator (R. III).	1
88.523	Circlip for dowel locating bellhousing (R. I).	2
88.795	Lockplate, single 8.5 diameter for screws securing camshaft thrust plate (R. I).	2
88.931	Plug for oil circulation 16 diameter 150 pitch (R. I).	2
88.940	Dowel for locating bellhousing (14 x 21.5) (R. I).	2

NUMBER	DESCRIPTION	No. OFF
117.290	Cylinder water drain plug, 12 diameter 175 pitch (R. I).	1
451.374	Joint for timing case (R. VI).	1
451.379	Lubricator for timing chain (R. I).	1
456.944	Flexible oil dipstick (R. VI).	1
457.159	Filter element for breather (20 x 44 x 40) (R. VI). All types. Until August 1956 Export. Since August 1956	1
457.160	Cap retaining filter element (R. VI) All types. Until August 1956 Export. Since August 1956	1

NUMBER	DESCRIPTION	No. OFF
461.143	Thrust plate for camshaft (R. I).	1
470.424	Joint for breather (R. VI)	1
617.005	"Mecanindus" pin 5 x 10 for centring cylinder head (R. VI). Since September 1957.	1
621.043	Screw, hex. head with shoulder 12 diameter 65 long securing bearing cap (R. I).	6
621.071	Screw, hex. head 7 diameter 55 long, securing timing case (R. I). Since March 1959.	11
730.007	Dowel pin, locating cylinder head (11.5 x 16 x 7.5) (R. I).	1

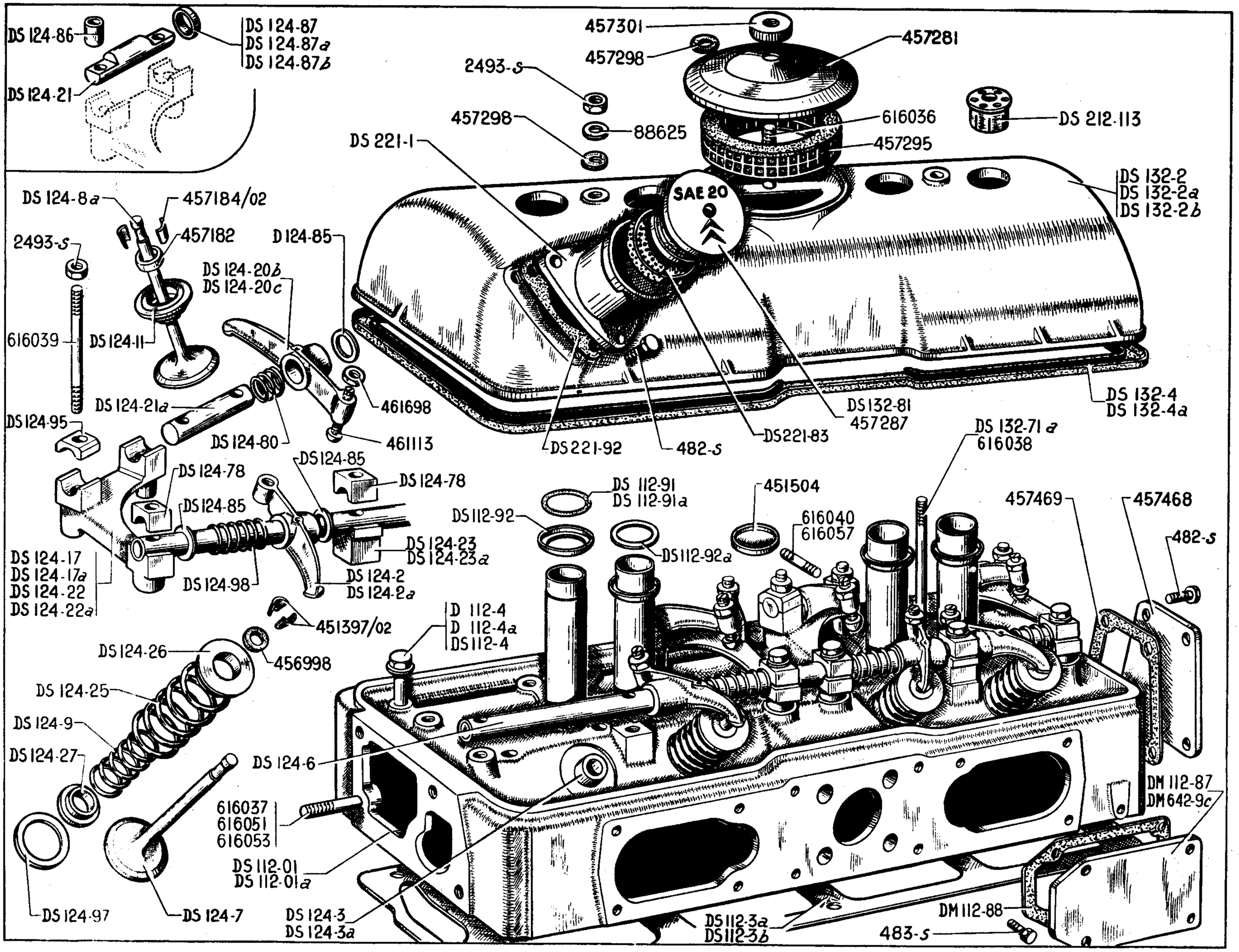
DS 124-86
DS 124-21
DS 124-87
DS 124-87a
DS 124-87b
457301
457298
457281
2493-s
457298
88625
616036
DS 212-113
DS 221-1
457295
SAE 20
DS 132-2
DS 132-2a
DS 132-2b
DS 124-8a
457184/02
457182
2493-s
D 124-85
DS 124-20b
DS 124-20c
616039
DS 124-11
DS 124-21a
461698
DS 124-95
DS 124-80
461113
DS 221-92
482-s
DS221-83
DS132-81
457287
DS 132-4
DS 132-4a
DS 132-71a
616038
DS 124-78
DS124-85
DS 124-78
DS 124-85
DS 112-91
DS 112-91a
451504
457469
457468
DS112-92
616040
616057
482-s
DS 124-23
DS 124-23a
DS112-92a
DS 124-17
DS 124-17a
DS 124-22
DS 124-22a
DS 124-98
DS 124-2
DS 124-2a
D 112-4
D 112-4a
DS112-4
451397/02
DS 124-26
456998
DS 124-25
DS 124-9
DS 124-27
DS 124-6
DM 112-87
DM 642-9c
616037
616051
616053
DS 112-01
DS 112-01a
DS 124-97
DS 124-7
DS 124-3
DS 124-3a
DS112-3a
DS112-3b
DM 112-88
483-s

NUMBER	DESCRIPTION	No. OFF
DS 112-01	Cylinder head only, with valve seats guides and sparking plug tubes (external inlet manifold) Until July 1959.	1
DS 112-01a	Cylinder head only, with valve seats, guides and sparking plug tubes (integral inlet manifold). Since July 1959.	1
DS 112-3a	Cylinder head gasket lined with asbestos (R. VI). Until March 1961.	1
DS 112-3b	Cylinder head gasket lined Hugo-Reinz (damper arrangement)(R. VI). Since March 1961.	
D 112-4	Screw, hex. head shouldered 10 x 102 x 25 securing cylinder head. Until September 1961.	7
D 112-4a	Screw, hex. head shouldered 10 x 105 x 28 securing cylinder head. Since September 1961.	7
DS 112-4	Screw, hex. head shouldered 10 x 149 x 25 securing cylinder head.	6
DM 112-87	Closing plate for cylinder head.	
	Except cold climates.	2
	Cold climates. Since July 1959.	1
DM 112-88	Joint for closing plate (R. VI). Since July 1959.	1
DS 112-91	Sealing ring for sparking plug tube (30.5 x 42.5 x 6) Until February 1961.	4
DS 112-91a	Sealing ring for sparking plug tube (rectangular section 31 x 39 x 6). Since February 1961.	4
DS 112-92	Retainer for sparking plug tube sealing ring (32 x 49 x 4) (R. VI). Until February 1961.	4
DS 112-92a	Thrust washer for sparking plug tube sealing ring (32 x 41 x 1.5) (R. VI). Since February 1961.	4
DS 124-2	Inlet rockers 2 and 4.	2
DS 124-2a	Inlet rockers 1 and 3.	2

NUMBER	DESCRIPTION	No. OFF
DS 124-3	Valve guide, external diameter 13 mm. 1st arrangement.	8
DS 124-3a	Valve guide, external diameter 13.25 mm. 2nd arrangement.	8
DS 124-6	Inlet rockershaft 18 diameter, 420 mm long.	1
DS 124-7	Inlet valve 42 mm diameter, 107.7 mm long.	4
DS 124-8a	Exhaust valve 37 mm diameter 105.5 mm long.	4
DS 124-9	Valve spring, inner (17.8 x 22.2 x 32.25).	8
DS 124.11	Upper cup for exhaust valve spring, height 8.5 mm, bore diameter, 15.3 mm depth 4.3 mm.	4
DS 124-17	Bracket No. 1 for rockershaft.	1
DS 124-17a	Bracket No. 4 for rockershaft.	1
DS 124-20b	Exhaust rockers 2 and 4.	2
DS 124-20c	Exhaust rockers 1 and 3.	2
DS 124-21	*Exhaust rockershaft 16 mm. diameter on 24 mm. long. Until April 1956. Replaced by DS 124-21a, order in addition 2-DS 124-95.*	4
DS 124-21a	Exhaust rockershaft 16 mm diameter, length 66 mm. Since April 1956.	4
DS 124-22	Bracket No. 3 for rockershaft.	1
DS 124-22a	Bracket No. 2 for rockershaft.	1

NUMBER	DESCRIPTION	No. OFF
DS 124-23	Bracket, intermediate, for inlet rockers (cast). Until May 1960.	2
DS 124-23a	Bracket, intermediate, for inlet rockers (steel). Since May 1960.	2
DS 124-25	Valve spring, outer (23.6 x 32 x 44.4).	8
DS 124-26	Cup upper for inlet valve spring, 10 mm deep, tapered bore (R. VI).	4
DS 124-27	Cup, lower, shouldered for valve spring (13.6 x 17 x 20 x 2.5) (R. VI).	8
DS 124-78	Cap for inlet valve rockershaft, central hole 10.5 mm diameter (R. VI).	6
DS 124-80	Spring for exhaust rockershaft (16.3 x 18.3 x 14.5). Since April 1956.	4
D 124-85	Washer 16.5 x 20 x 0.9 for spacing exhaust rockers.	4
DS 124-85	Washer 18.5 x 25 x 1 for spacing inlet rockers.	
	Until May 1960.	4
	Since May 1960.	8
DS 124-86	Distance piece for fitting exhaust rockershaft (7.25 x 12 x 10) Until April 1956.	8
	Washer for lateral adjustment of exhaust rocker, diameter 16 x 20. Until April 1956.	As nec.
DS 124-87	5.7 mm thick.	
DS 124.87a	6 mm thick.	
DS 124-87b	6.3 mm thick.	
DS 124-95	Cap securing exhaust rockershaft, central hole 7.75 diameter (R. VI). Since April 1956.	8

NUMBER	DESCRIPTION	No. OFF
DS 124-97	Thrust washer, lower for outer valve spring (22.1 x 32 x 0.5) (R. VI).	8
DS 124-98	Spring for inlet rockershaft (18.3 x 21.3 x 59).	4
DS 132-2	*Cylinder head cover only. Until February 1961. Replaced by DS 132-2a, order in addition: 4-DS 112-91a, 4-DS 112-92a, 1-DS 132-4a.*	1
DS 132-2a	Cylinder head cover, only (U section joint). All Types. February 1961 - March 1962. Export. Since March 1962.	1
DS 132-2b	Cylinder head cover, only, with filler tube. All Types except Export. Since March 1962.	1
DS 132-4	Joint for cylinder head cover (rectangular section). Until February 1961.	1
DS 132-4a	Joint for cylinder head cover (U section). Since February 1961.	1
DS 132-71a	Stud, 7 diameter, 146 long, (threaded 10 and 55), securing cylinder head and air filter. All Types except Export.	1
<u>DS 132-77</u>	Distance piece for filter element (8 x 10 x 24.5).	1
DS 132-81	Filler cap (R. VI). All Types except Export. Since March 1962.	1
DS 212-113	Cap for sparking plug hole (R. VI).	4
DS 221-1	Oil filler on cylinder head cover (R. VI). All Types. Until March 1962. Export. Since March 1962.	1
DS 221-83	Filter for oil filler (R. VI). All Types except Export. Since March 1962.	1
DS 221-92	Joint for oil filter (R. VI). All Types. Until March 1962. Export. Since March 1962.	1
DM 642-9c	Closing plate for cylinder head with temperature gauge bulb connection (welded nut). Cold Climate.	1

NUMBER	DESCRIPTION	No. OFF
482-S	Screw, hex. head 7 diameter 12.5 long (R. III). . securing: - rear closing plate. - oil filler. All types. Until March 1962. Export. Since March 1962.	 4 3
483-S	Screw, hex. head 7 diameter 15 long, securing lateral closing plates (R. III). Since July 1959.	8
2.493-S	Nut, hex., 7 diameter 100 pitch (R. III) securing: - cylinder head cover. - bracket for exhaust rockershaft.	 2 8
88.625	Washer, 7.5 x 20 x 1.5 under nut securing cylinder head cover (R. I).	2
451.397/02	Split cotter for inlet valve cup 8 mm high (2 parts) (R. I).	4
451.504	Core plug (30 mm diameter) (R. I).	3
456.998	Washer, 7 x 11 x 2.5 for sealing the stem of the inlet valve (R. I).	4
457.182	Cup for exhaust valve split cotters, tapered hole 4.5 mm thick (R. I).	4
457.184/02	Split cotter for exhaust valve 5.65 mm high (2 parts) (R. I).	4
457.281	Cap on filter element (R. VI).	1
457.287	Oil filler cap (R. VI). All types. Until March 1962. Export. Since March 1962.	1
457.295	Filter element on cylinder head cover (65 x 87 x 22) (R. VI).	1
457.298	Joint 7 x 20 x 2 (R. VI). - for filter cap nut. Until May 1957 - under nuts securing cylinder head cover.	 1 2

NUMBER	DESCRIPTION	No. OFF
457.301	Knurled nut 7 diameter 100 pitch, securing cap on filter element (R. I).	1
457.468	Closing plate, rear for cylinder head (R. I).	1
457.469	Joint for rear closing plate (R. VI).	1
461.113	Tappet adjusting screw (R. I).	8
461.698	Locknut, hex. 7 diameter 100 pitch, with collar, for tappet adjusting screw (R. I).	8
616.036	Stud, 7 diameter 50 long (threaded 10.5 and 17) securing filter element.	1
616.037	Stud, 10 diameter 90 long (threaded 15 and 20) securing water pump cover and air filter (R. I). Until September 1960.	2
616.038	Stud, 7 diameter 117 long (threaded 10 and 55) securing cylinder head cover (R. I). All types except Export Export	 1 2
616.039	Stud, 7 diameter 76.5 long (threaded 10 and 17) securing exhaust rocker bracket (R. I).	8
616.040	Stud, 7 diameter 42.5 (threaded 14 and 18) (R. I) securing: - inlet and exhaust manifolds Until July 1959. - exhaust manifold July 1959 - September 1960. Since September 1960.	 16 8 7
616.051	Stud 10 diameter 80 long (threaded 15 and 20) securing water pump cover (R. I). Since September 1960.	1
616.053	Stud 10 diameter 110 long (threaded 15 and 45) securing cover for pump and centrifugal regulator (R. I). Since September 1960.	1
616.057	Stud, 7 diameter 52 long (threaded 14 and 18) securing exhaust manifold, for plate retaining front screen and reinforcement for centrifugal regulator (R. I). Since September 1960.	1

The numbers underlined indicate new parts and do not appear on the illustrations.

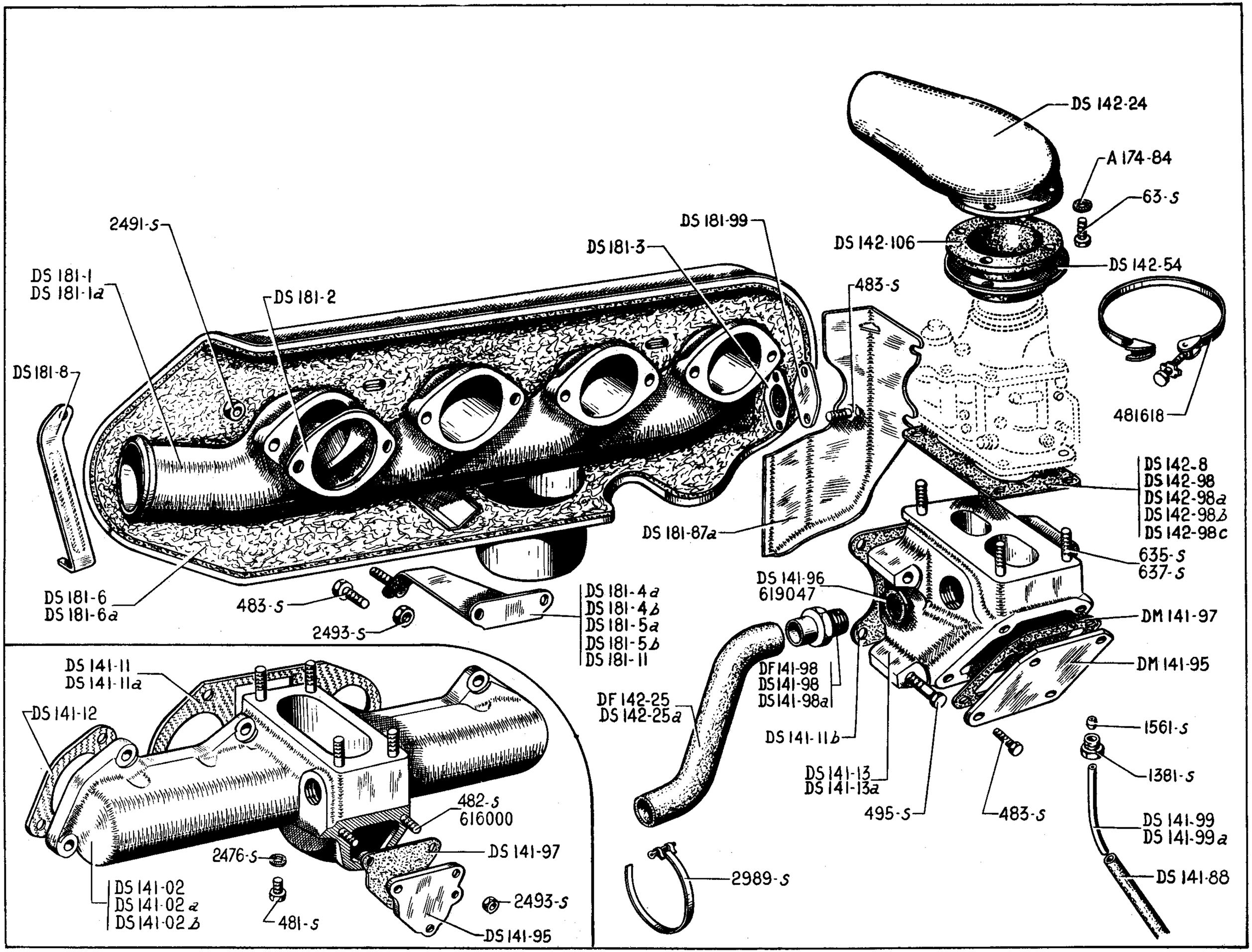
DS 142-24
A 174-84
63-S
DS 142-106
DS 142-54
481618
DS 181-99
DS 181-3
2491-S
DS 181-1
DS 181-1a
DS 181-2
483-S
DS 181-8
DS 142-8
DS 142-98
DS 142-98a
DS 142-98b
DS 142-98c
DS 181-87a
635-S
637-S
DS 181-6
DS 181-6a
483-S
2493-S
DS 181-4a
DS 181-4b
DS 181-5a
DS 181-5b
DS 181-11
DS 141-96
619047
DM 141-97
DM 141-95
DF 141-98
DS 141-98
DS 141-98a
DF 142-25
DS 142-25a
DS 141-11b
DS 141-11
DS 141-11a
DS 141-12
1561-S
1381-S
DS 141-13
DS 141-13a
495-S
483-S
482-S
616000
DS 141-97
2476-S
DS 141-99
DS 141-99a
2989-S
DS 141-88
DS 141-02
DS 141-02a
DS 141-02b
481-S
2493-S
DS 141-95

NUMBER	DESCRIPTION	No. OFF
	For the carburetter and spare parts apply direct to Messrs. WEBER or ZENITH.	
A 174-84	Fibre washer 4.5 x 8 x 0.5 under securing cup for shouldered connection (R. VI).	3
DS 141-02	*Inlet manifold with studs, water inlet 48 × 61. Until September 1956. Replaced by DS 141-02b, order in addition: 1-DS 141-11a (R. VI). 1-DS 142-98. (R. VI).*	1
DS 141-02a	*Inlet manifold with studs, water inlet 55 × 61, with studs 635-S. September 1956 - December 1956. Replaced by DS 141-02b; order in addition: 1-DS 142-98 (R. VI).*	1
DS 141-02b	Inlet manifold with studs, water inlet 55 x 61, with studs 637-S December 1956 - July 1959.	1
DS 141-11	Central gasket between inlet manifold and cylinder head, 2 holes 37 mm; 1 hole 48 x 61 (R. VI). Until September 1956.	1
DS 141-11a	Central gasket between inlet manifold and cylinder head, 2 holes 37 mm; 1 hole 55 x 61 (R. VI). September 1956 - July 1959.	1
DS 141-11b	Joint for inlet housing on cylinder head (central hole 41.5 to 42.5 max) (R. VI). Since July 1959.	1
DS 141-12	Outer gasket between inlet manifold and cylinder head, central hole 37 mm, 2 holes 8.25 mm 70 mm between centres (R. VI). Until July 1959.	2

NUMBER	DESCRIPTION	No. OFF
DS 141-13	Inlet housing with studs, closing plate, oval section ports. July 1959 - February 1961.	1
DS 141-13a	Inlet housing with studs, closing plate, round section ports. Since February 1961.	1
DS 141-88	Rubber petrol drain tube (4 x 11 x 250). Replaces type 400 long.	1
DM 141-95	Closing plate for inlet housing. Since July 1959.	1
DS 141-95	Closing plate (R. VI). Until July 1959.	1
DS 141-96	Fibre joint for water outlet union (24.5 x 30 x 1.5 to 2) (R. VI). Until July 1959.	1
DM 141-97	Joint, paper for closing plate (R. VI). Since July 1959.	1
DS 141-97	Joint, paper for closing plate (R. VI). Until July 1959.	1
DF 141-98	Union for water outlet, threaded 24 diameter 150 pitch, outside diameter 22. Since September 1960.	1
DS 141-98	Union for water outlet, threaded 20 diameter 150 pitch, outside diameter 19. Until July 1959.	1
DS 141-98a	Union for water outlet, threaded 20 diameter 150 pitch, outside diameter 22. July 1959 - September 1960.	1
DS 141-99	Petrol drain pipe (3 x 4.5 x 60) on inlet manifold. Until July 1959.	1
DS 141-99a	Petrol drain pipe (3.5 x 4.5 curved) on inlet housing. Since July 1959.	1

NUMBER	DESCRIPTION	No. OFF
DS -142-8	Gasket for carburettor (R. VI). Until December 1956.	1
DS 142-24	Air inlet pipe on carburettor.	1
DF 142-25	Flexible pipe for carburettor heating, internal diameter 18 mm. Since September 1960.	
DF 142-25a	Flexible pipe for carburettor heating, internal diameter 21 mm. Until September 1960.	1
DS 142-54	Cup connecting shouldered union on air inlet pipe (72 x 93 x 3).	1
DS 142-98	Distance piece under Weber carburettor, 2 holes 36 mm diameter 5 mm thick. (R. VI). December 1956 - July 1959.	1
DS 142-98a	Distance piece under Zenith carburettor 2 holes 31 mm diameter 5 mm thick (R. VI). December 1956 - July 1959.	1
DS 142-98b	Distance piece under carburettor, 2 oval holes, thickness 5 mm (R. VI). July 1959 - February 1961.	1
DS 142-98c	Distance piece under carburettor, 1 hole 33 mm diameter, 5 mm thick (R. VI). Since February 1961.	1
DS 142-106	Shouldered flexible connector for air inlet pipe (65 x 71 x 90 x 20)	1
DS 181-1	Exhaust manifold. Until February 1956.	1
DS 181-1a	Exhaust manifold. February 1956 - September 1962.	1
DS 181-1b	Exhaust manifold. Since September 1962.	1
DS 181-2	C/A gasket between exhaust manifold and cylinder head (R. VI).	4

The numbers underlined indicate new parts and do not appear on the illustrations.

NUMBER	DESCRIPTION	No. OFF
DS 181-3	C/A gasket for closing plate (2 holes, 7.5 mm, 1 hole 18 mm) (R. VI). Until April 1957.	1
DS 181-4a	*Bracket, front for exhaust shield (with welded nut). February 1956 – December 1957. Replaced by DS 181–4b; order in addition: 1–2493–S (R. III).*	1
DS 181-4b	Bracket, front, for exhaust shield (with welded screw). December 1957 - September 1962.	1
DS 181-4c	Support, front, for exahust shield (with welded nut). Since September 1962.	1
DS 181-5a	*Bracket, rear for exhaust shield (with welded nut). February 1956 – December 1957. Replaced by DS 181–5b; order in addition: 1–2493–S (R. III).*	1
DS 181-5b	Bracket, rear, for exhaust shield (with welded screw). December 1957 - September 1962.	1
DS 181-5d	Support, rear, for exhaust shield (with welded nut). Since September 1962.	1
DS 181-6	*Shield for exhaust manifold. Until February 1956. No longer supplied.*	1
DS 181-6a	Shield for exhaust manifold. February 1956 - September 1962.	1
DS 181-6c	Exhaust shield, lower part. Since September 1962.	1
DS 181-8	Front retaining plate for exhaust shield. Since July 1957.	1
DS 181-11	Plate with welded nut retaining heater outlet pipe. September 1960 - September 1962.	1
DS 181-14	Exhaust shield, upper part. Since September 1962.	1

NUMBER	DESCRIPTION	No. OFF
DS 181-77	Plate securing upper and lower shields on manifold. Since September 1962.	1
DS 181-87a	Rear closing panel for exhaust shield. Until September 1962.	1
DS 181-87b	Rear closing panel for exhaust shield. Since September 1962.	1
DS 181-99	Closing plate for exhaust manifold (2 holes 7.5 mm) (R. VI). Until April 1957.	1
63-S	Screw, hex. head, 4 diameter x 10 long, securing shouldered connecting cup for air inlet (R. III).	3
481-S	Drain plug, hex. head, 7 diameter x 10 long (R. III). Until July 1959.	1
482-S	Screw, hex. head, 7 diameter x 12.5 long, securing closing plate for exhaust manifold (R. III). December 1956 - July 1959.	3
483-S	Screw, hex. head, 7 diameter x 15 long (R. III) securing:	
	- plate on exhaust manifold. Until April 1957.	2
	- closing plate on inlet housing. Since July 1959.	3
	- shield on bracket.	2
483-S 30	Screw, hex. head, pointed, 7 diameter x 15 long, securing upper shield (R. III). Since September 1962.	4
495-S	Screw, hex. head, 7 diameter x 45 long, securing inlet housing (R. III). Since July 1959.	4
635-S	Stud, 7 diameter x 30.5 long, (threaded 17 and 10.5), securing carburettor (R. III). Until December 1956.	4
637-S	Stud, 7 diameter x 35.5 long, (threaded 17 and 10.5), securing carburettor (R. III). Since December 1956.	4

NUMBER	DESCRIPTION	No. OFF
1.381-S	Union screw, 10 diameter x 100 pitch, for petrol drain pipe (R. III).	1
1.561-S	Biconical union, 4.5 mm for petrol drain pipe (R. III).	1
2.319-S	Nut, hex., 5 diameter x 75 pitch, 5 mm high (R. III) securing:	
	- upper shield on plate DS 181-77.	1
	- plate DS 181-77 on lower shield.	1
2.476-S	Copper washer, 7.2 x 11 x 1 to 1.5 for water drain plug (R. VI). Until July 1959.	1
2.491-S	Nut, hex., 7 diameter x 100 pitch, (7 mm high) securing manifold (R. III).	
	Until July 1959.	16
	Since July 1959.	8
2.493-S	Nut, hex., 7 diameter x 100 pitch, (height 5 mm) (R. III) securing:	
	- closing plate. Until December 1956.	3
	- shield on bracket. December 1957 - September 1962.	2
	- Since September 1962.	1
2.989-S	Clip (5 mm wide, 245 mm long), securing heater tube on carburettor (R. VI).	2
481-618	Fixing clip for shouldered connection on carburettor air inlet pipe (R. VI).	1
616.000	*Stud 7 diameter 20·5 long (threaded 10·5 and 7·5) securing closing plate (R. I). Until December 1956. No longer supplied.*	3
619.047	Joint, 20.5 x 26 x 1.5 to 2 for water outlet union (R. VI). Since July 1959.	1
621.062	Screw, hex. head, 5 diameter x 14 long, securing upper shield on plate DS 181-77 (R. III).	1

The numbers underlined indicate new parts and do not appear on the illustrations.

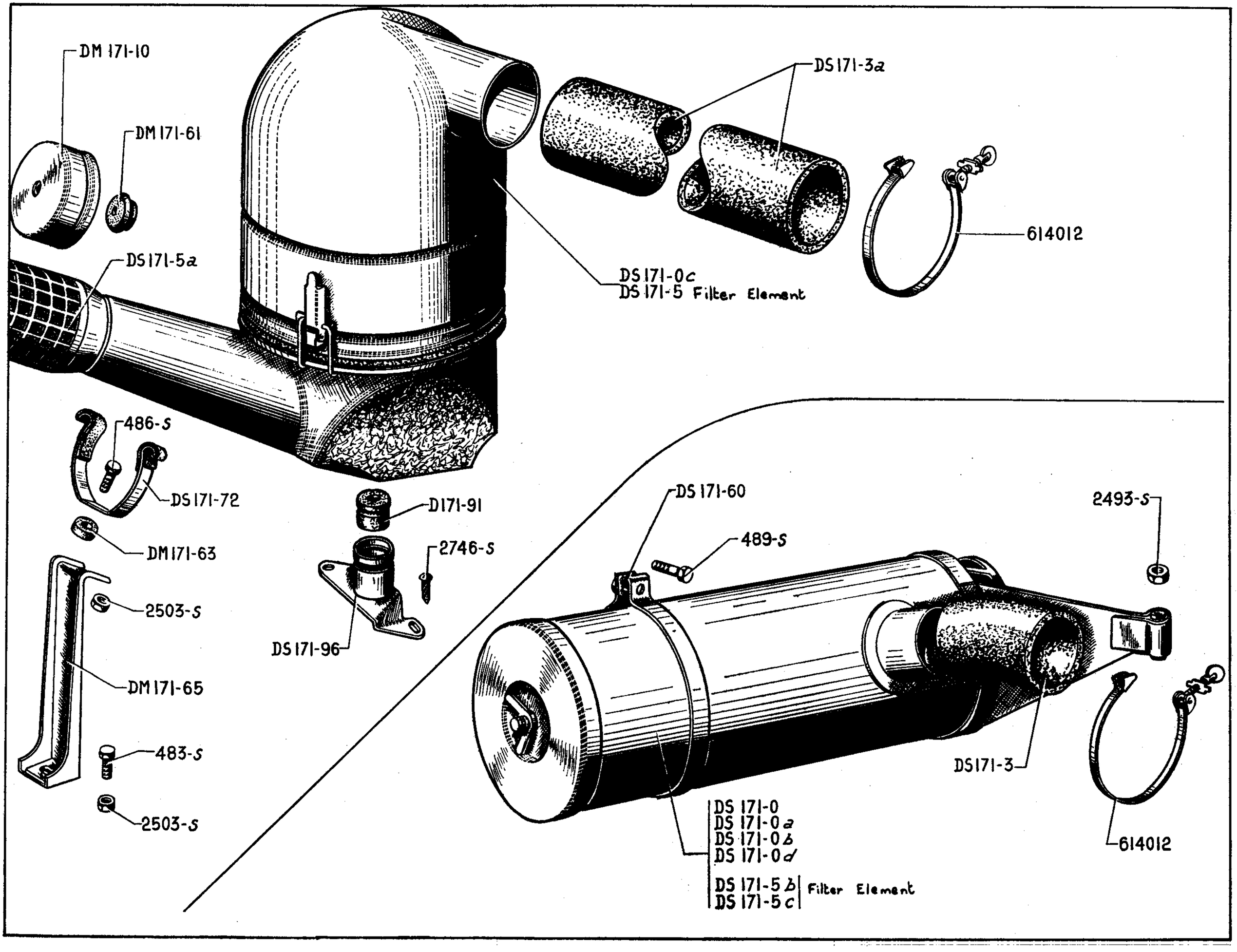
DM 171-10
DM 171-61
DS 171-5a
DS 171-3a
614012
DS 171-0c
DS 171-5 Filter Element
486-S
DS 171-72
DM 171-63
2503-S
DM 171-65
483-S
2503-S
D171-91
2746-S
DS 171-96
DS 171-60
489-S
2493-S
DS 171-3
614012
DS 171-0
DS 171-0a
DS 171-0b
DS 171-0d
DS 171-5b
DS 171-5c
Filter Element

NUMBER	DESCRIPTION	No. OFF
	AIR FILTER - DRY TYPE	
DS 171-0	*Air filter Vokes (fixing plate hole 12 mm. long) (R. VI). Until January 1957. Replaced by DS 171-0b; order in addition: 1-DS 132-71a.*	1
DS 171-0a	Air filter MIOM (R. VI). January 1957 - September 1960.	1
DS 171-0b	Air filter "Vokes" (fixing plate with eyelet, 24 mm long). January 1957 - September 1960.	1
DS 171-0d	Air filter MIOM (front fixing by clip (R. VI). Since September 1960.	1
DS 171-3	Flexible connection, elbowed between air filter and air inlet pipe.	1
DS 171-5b	MIOM air filter element (R. VI).	1
DS 171-5c	Vokes air filter element (R. VI). Since January 1957.	1
DS 171-60	Clip securing filter on heater pipe (R. VI). Since September 1960.	1

NUMBER	DESCRIPTION	No. OFF
489-S	Screw, hex. head 7 diameter 30 long for tightening clip securing air filter (R. III). Since September 1960.	1
2.493-S	Nut, hex. head 7 diameter 100 pitch securing air filter on cylinder head cover (R. III).	1
614.012	Clip securing union between air filter and pipe (R. VI).	2
	AIR FILTER OIL BATH TYPE EXPORT	
DS 171-0c	MIOM air filter.	1
DS 171-3a	Flexible connection between air filter and carburettor (R. VI).	1
DS 171-5	Filter element (R. VI).	1
DS 171-5a	Filter element for air inlet (R. VI).	1
DM 171-10	Oil measure cup (R. VI).	1
DM 171-61	Washer, rubber for oil measure cup (R. VI).	1

NUMBER	DESCRIPTION	No. OFF
DM 171-63	Packing piece rubber 7.5 x 25 x 8 for filter support.	1
DM 171-65	Bracket, front for air filter.	1
DS 171-72	Clip for air inlet.	1
D 171-91	Bush, rubber 9.8 x 30 x 22 for air filter support.	1
DS 171-96	Bracket, rear for air filter.	1
483-S	Screw, hex. head 7 diameter 15 long securing bracket for air inlet support (R.III).	1
486-S	Screw, hex. head 7 diameter 22.5 long securing clip for air inlet (R. III).	1
2.503-S	Nut, hex. 7 diameter 100 pitch (R. III) securing:	
	- clip of air inlet pipe on support.	1
	- for support.	2
2.746-S	Screw PK round head, cruciform slot 4.85 x 16 securing rear bracket (R. VI).	2
614.012	Clip securing union on air filter (R. VI).	2

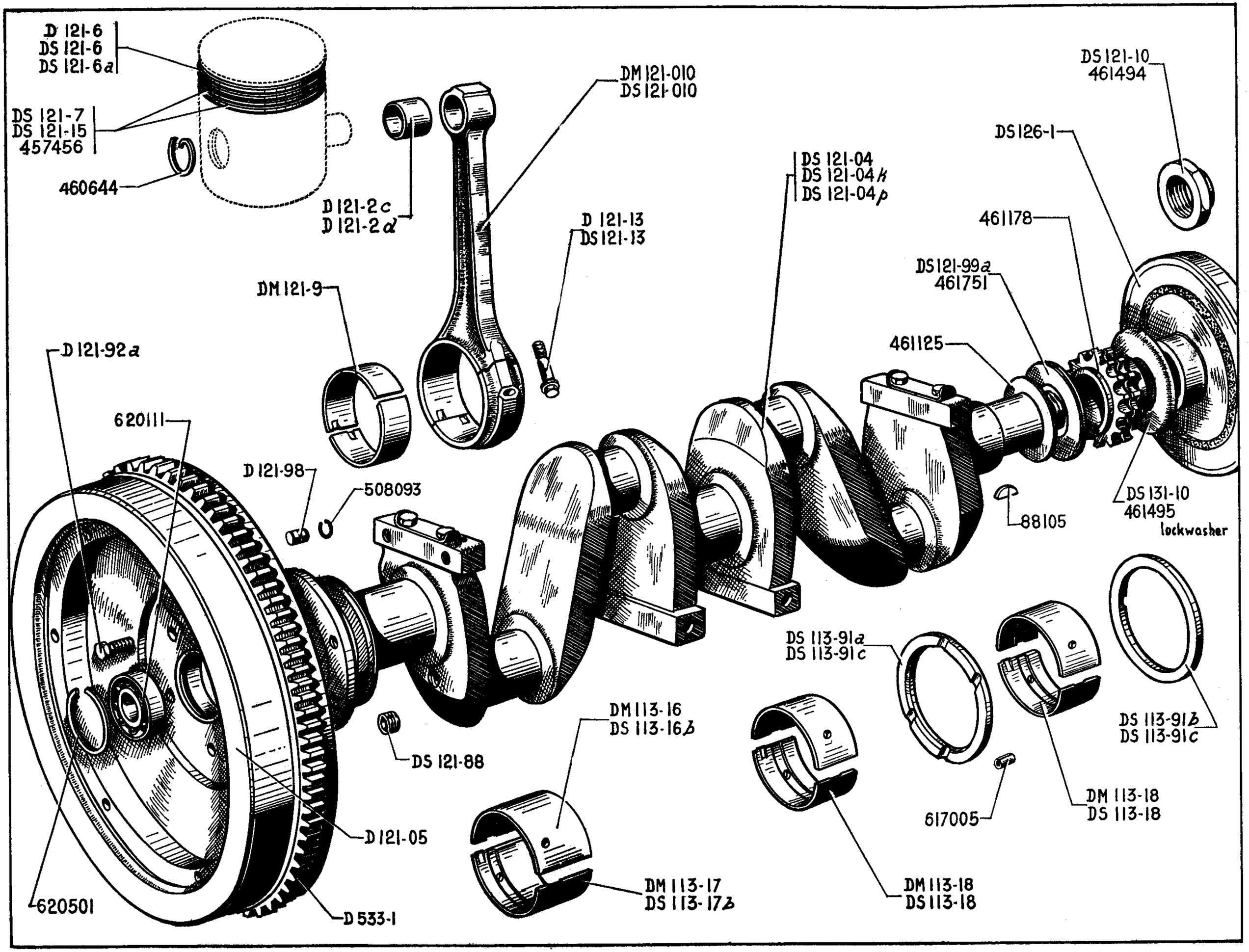
D 121-6
DS 121-6
DS 121-6a
DS 121-7
DS 121-15
457456
460644
D 121-2c
D 121-2d
DM 121-010
DS 121-010
D 121-13
DS 121-13
DM 121-9
DS 121-04
DS 121-04k
DS 121-04p
DS 121-10
461494
DS 126-1
461178
DS 121-99a
461751
461125
88105
DS 131-10
461495
lockwasher
D 121-92a
620111
D 121-98
508093
DS 113-91a
DS 113-91c
DS 113-91b
DS 113-91c
DM 113-16
DS 113-16b
DS 121-88
DM 113-18
DS 113-18
617005
D 121-05
DM 113-17
DS 113-17b
DM 113-18
DS 113-18
620501
D 533-1

NUMBER	DESCRIPTION	No. OFF
	NOTE - The pistons and gudgeon pins are not supplied separately. See piston and cylinder barrel assemblies (page 2).	
	Top half of front bearing, lubricating groove at 18.6 mm from positioning dowel, 54.3 mm long (R. VI). Replaces type 56.3 mm long.	1
DM 113-16	Bore 53.5 mm. 2nd possibility.	
DS 113-16b	Bore 54 mm. 1st possibility.	
	Bottom half of front bearing lubrication groove at 3 mm from positioning dowel, 54.3 mm (R. VI). Replaces type 56.3 mm long.	1
DM 113-17	Bore 53.5 mm. 2nd possibility.	
DS 113-17b	Bore 54 mm. 1st possibility.	
	Half bearing top and bottom, centre and rear, 37 mm long (R. VI).	4
DM 113-18	Bore 53.5 mm. 2nd possibility.	
DS 113-18	Bore 54 mm. 1st possibility.	
DS 113-91a	Inner ring for rear bearing (58.1 x 72 x 4.03 chamfer on internal diameter) (R. VI). Until January 1961.	1
DS 113-91b	Outer ring for rear bearing (58.1 x 72 x 4.03 without chamfer on internal diameter) (R. VI). Until January 1961.	1
DS 113-91c	Ring for rear bearing (58.1 x 72 x 2.3) (R. VI). Since January 1961.	2
DS 121-04	*Crankshaft, main bearing 54 mm. diameter connecting rod journal 48 mm. diameter, width of rear crankshaft bearing 44·1 mm. Until January 1961. Replaced by DS 121-04k. See Technical Note 739.*	1
DS 121-04k	*Crankshaft, main bearing 54 mm diameter connecting rod journal 48 mm diameter width of rear crankshaft bearing 42·3 mm; total length 563 mm. January 1961 March 1961. Replaced by DS 121-04v. (See Catalogue No. 470).*	1
DS 121-04p	Crankshaft main bearing, 54 mm diameter, connecting rod journal 48 mm diameter, total length 596 mm, holes for flywheel fixing tapped 9 diameter x 125 pitch, (arrangement with damper). March 1961 - June 1962.	1

NUMBER	DESCRIPTION	No. OFF
DS 121-04t	Crankshaft, main bearing 54 mm diameter, connecting rod journal (48 mm diameter holes for flywheel fixing tapped 10 diameter x 125 pitch. (Fitted with 6 screws DS 121-92). Since June 1962.	1
D 121-05	*Engine flywheel with starter gear ring, total thickness 84 mm, fixing holes 9·5 mm diameter. Until June 1962. Replaced by DS 121-05.*	1
DS 121-05	Flywheel with starter gear ring, fixing holes 11 mm diameter. Since June 1962.	1
DM 121-010	Connecting rod, 48 mm diameter, journal 27 mm wide (body of stamped DS 121-11, thickness of body 22 mm). Since June 1957.	4
DS 121-010	*Connecting rod, 48 mm. diameter, journal 27 mm. wide (body stamped D 121-11, thickness body 19 mm.). Until June 1957. Replaced by DM 121-010 per set of 4, see Technical Note No. 673.*	4
D 121-2c	Small end bush (20 x 21.5 x 25). 1st possibility (R. VI).	4
D 121-2d	Small end bush (20 x 21.7 x 25). 2nd possibility (R. VI).	4
D 121-6	Piston ring, tapered, 78 x 2.5. Until March 1961.	4
DS 121-6	Piston ring, cylindrical, chrome 78 x 2.5. Until October 1957.	4
DS 121-6a	Piston ring, cylindrical, chrome 78 x 2 (R. VI). Since October 1957.	4
DS 121-7	Oil scraper ring, chrome, 78 x 2.5 (damper arrangement). Since March 1961.	4
DM 121-9	Half shell bearing for connecting rod, 48 mm diameter, 27 mm wide (R. VI).	8
DS 121-10	Nut, hex., 36 diameter x 150 pitch, securing damper on crankshaft. Since March 1961.	1
D 121-13	Set screw, hex. head, 9 diameter x 32 long, securing big end cap. Until June 1957.	8
DS 121-13	Set screw, hex. head, 9 diameter x 29 long, securing big end cap (marked "1"). Since June 1957.	8
DS 121-15	Oil scraper ring, 78 x 5 (damper arrangement). Since March 1961.	4

NUMBER	DESCRIPTION	No. OFF
DS 121-88	Cap, sealing oilways on crankshaft (threaded 22 x 125) (R. VI).	4
D 121-92a	Screw, hex. head, 9 diameter x 17 long, securing engine flywheel (17 across flats). Until June 1962.	6
DS 121-92	Screw, hex. head, 10 diameter x 17 long, securing engine flywheel. Since June 1962.	6
D 121-98	Dowel, 10 diameter x 16 long, centring engine flywheel on crankshaft (R. VI).	1
DS 121-99a	Washer, 38 x 74 x 6.7, for crankshaft thrust. Since January 1961.	1
DS 126-1	Damper (R. VI). Since March 1961.	1
DS 131-10	Oil seal washer on crankshaft (38.5 x 73 x 3) (damper arrangement). Since March 1961.	1
D 533-1	Starter gear ring (93 teeth) internal diameter 272 mm.	1
88.105	Woodruff key, 18.5 x 4.6 x 7.9, for crankshaft pinion (R. II).	1
457.456	Scraper ring, 78 x 4 (R. I). Until March 1961.	8
460.644	Circlip for gudgeon pin (R. I).	8
461.125	Washer, 38.5 x 44.5 x 0.05, for crankshaft adjustment (R. I).	As nec.
461.178	Pinion for crankshaft (19 teeth) (R. I).	1
461.494	Nut, hex., 36 diameter x 150 pitch, securing crankshaft pinion (R. VI). Until March 1961.	1
461.495	Lockplate, round, 36.5 diameter for crankshaft nut (R. I). Until March 1961.	1
461.751	Washer, 38 x 73 x 5, for crankshaft thrust. (R. I). Until January 1961.	1
508.093	Circlip for dowel centring engine flywheel (R. I).	1
617.005	Pin "Mecanindus" 5 x 10, locking bearing ring (R. VI).	2
620.111	Ball bearing, 15 x 42 x 13, with double sealing flange (R. VI).	1
620.501	Circlip, 44.7 mm diameter retaining rear crankshaft spigot bearing (R. VI).	1

The numbers underlined indicate new parts and do not appear on the illustrations.

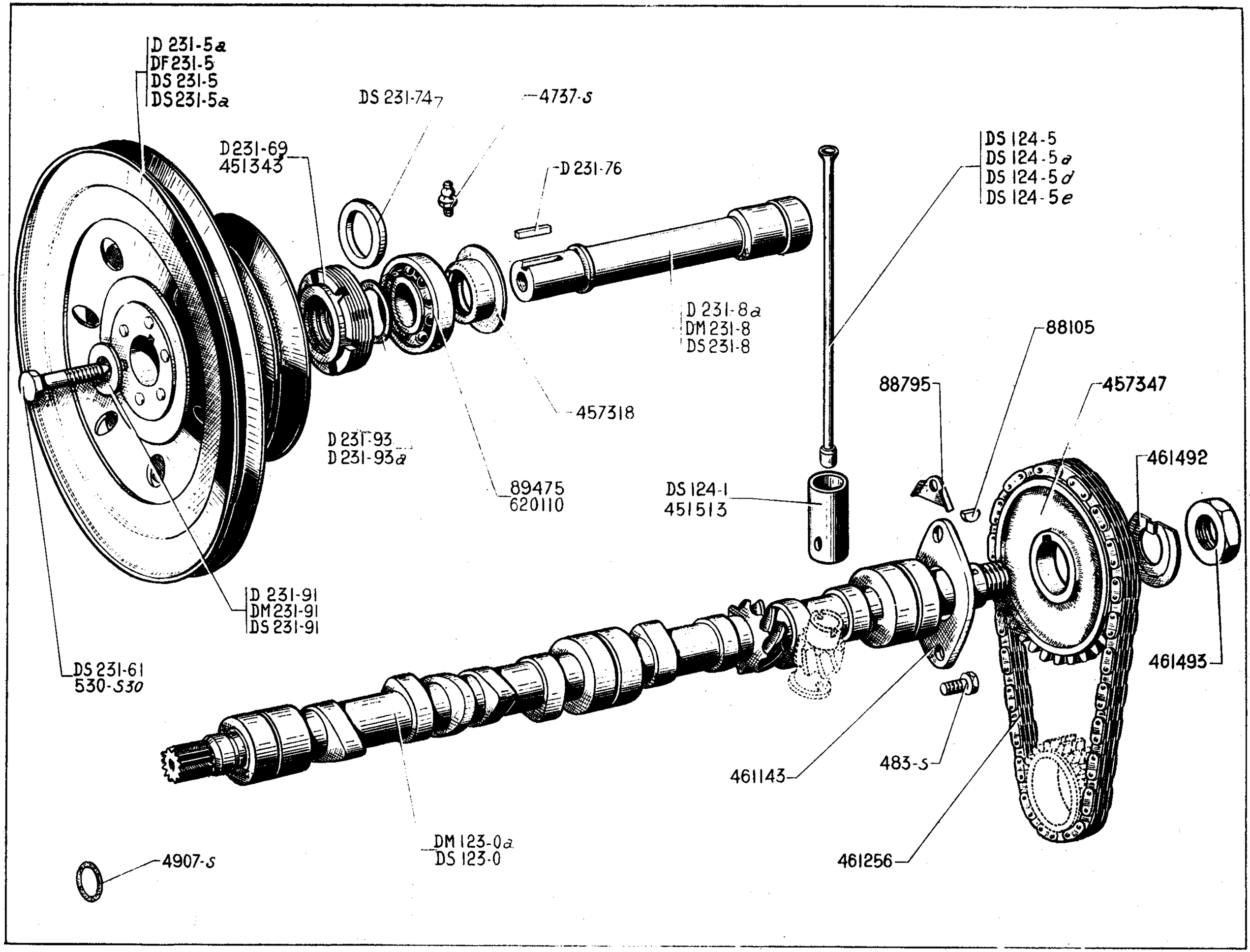
D 231-5a
DF 231-5
DS 231-5
DS 231-5a
DS 231-74
4737-S
D231-69
451343
D 231-76
DS 124-5
DS 124-5a
DS 124-5d
DS 124-5e
D 231-8a
DM 231-8
DS 231-8
88105
88795
457347
457318
D 231-93
D 231-93a
89475
620110
DS 124-1
451513
461492
D 231-91
DM 231-91
DS 231-91
461493
DS 231-61
530-S30
461143
483-S
DM 123-0a
DS 123-0
461256
4907-S

NUMBER	DESCRIPTION	No. OFF
DM 123-0a	Crankshaft with end piece, total length 545 mm. Since July 1961.	1
DS 123-0	Camshaft with end piece, total length 528 mm. Until July 1961.	1
DS 124-1	Tappet for push-rod 26 mm diameter spherical diameter 14 mm. Since April - June 1956.	8
DS 124-5	Push-rod for inlet rocker, length 227 mm spherical diameter 9 mm. Until April - June 1956.	4
DS 124-5a	Push-rod for exhaust rocker, length 253 mm spherical diameter 9 mm. Until April - June 1956.	4
DS 124-5d	Push-rod for inlet rocker, length 225 mm spherical diameter 14 mm. Since April - June 1956. Replaces type with dural ball end.	4
DS 124-5e	Push-rod for exhaust rocker, length 251 mm spherical diameter 14 mm. Since April - June 1956. Replaces type with dural ball end.	4
D 231-5a	Pulley driving water pump, dynamo and suspension pump, triple groove, diameter hub 31.6 mm. Until July 1956.	1
DF 231-5	Pulley, triple groove, driving water pump, high pressure pump, dynamo and centrifugal regulator. Since September 1960.	1
DS 231-5	*Pulley driving water pump, dynamo and suspension pump, 4 grooves, thickness of hub 28 mm. July 1956 – October 1958. Replaced by DS 213–5a, order in addition 1–DS 231–74.*	1
DS 231-5a	Pulley driving water pump, dynamo and suspension pump, 4 grooves, thickness of hub 25 mm. October 1958 - September 1960.	1

NUMBER	DESCRIPTION	No. OFF
D 231-8a	*Shaft driving water pump, dynamo and suspension pump, threaded 9 diameter 125 pitch. Until October 1958. Replaced by DS 231–8; order in addition: 1–DS 231–61, 1–DS 231–91.*	1
DM 231-8	Shaft driving water pump, dynamo and suspension pump, end piece splined 57.5 mm long. Since July 1961.	1
DS 231-8	Shaft driving water pump, dynamo and suspension pump, threaded 10 diameter 100 pitch, end piece splined 40.5 mm long. October 1958 - July 1961.	1
DS 231-61	Screw, hex. head, 10 diameter 30 long securing pulley. Since October 1958	1
D 231-69	Ring nut, locking bearing on driving shaft (external thread 50 diameter x 150 pitch), oil return thread, internal diameter 32. Until September 1960.	2
DS 231-74	Washer 20 x 31.5 x 3 between adjusting washer and pulley. October 1958 - September 1960.	1
D 231-76	Key, rectangular 4 x 4 x 21 for driving pulley (R. VI).	1
D 231-91	Washer 9 x 28 x 4 under screw securing pulley. Until October 1958.	1
DM 231-91	Washer 10.5 x 28 x 5 under screw securing pulley. Since September 1960.	1
DS 231-91	Washer, 10.5 x 32 x 5, under screw securing pulley. October 1958 - September 1960.	1
D 231-93	Washer 20.5 x 27 for pulley adjustment, 0.5 mm thick.	As nec.
D 231-93a	Washer, 20.5 x 27 for pulley adjustment, 0.8 mm thick.	As nec.
483-S	Screw, hex. head, 7 diameter 15 long, securing camshaft thrust plate (R. III).	2
530-S 30	Screw, hex. head 9 diameter 22 long, securing pulley (R. III). Until October 1958.	1

NUMBER	DESCRIPTION	No. OFF
4.737-S	Greaser, straight for bearing (R. VI). Until March 1958.	1
4.907-S	Ring seal 18.4 x 23.8 x 2.7 on splined end of camshaft (R. VI). Until July 1961.	1
88.105	Woodruff key 18.5 x 4.6 x 7.9 for camshaft pinion (R. II).	1
88.795	Lockwasher, single 8.5 diameter for screws securing camshaft thrust plate (R. I).	2
89.475	Bearing, front 20 x 47 x 14 for driving shaft (R. VI). Until March 1958.	1
451.343	Nut locking driving shaft bearing, external thread 50 diameter 150 pitch, oil return thread internal diameter 28 mm (R. I). Since September 1960.	1
451.513	Tappet for rocker push rod 26 mm diameter spherical diameter 9 mm (R. I). Until April - June 1956.	8
457.318	Deflector for driving shaft diameter 20 and 41 mm, total thickness 13 mm (R. I). Until March 1958.	1
457.347	Camshaft pinion (38 teeth, hub thickness 27.6 mm) (R. I).	1
461-143	Camshaft thrust plate (R. I).	1
456.256	Timing chain (R. VI).	1
461.492	Lockwasher, round 24.5 mm diameter for nut securing camshaft pinion (R. I).	1
461.493	Nut, hex. 24 diameter 150 pitch locking camshaft pinion (R. I).	1
620.110	Ball bearing 20 x 47 x 14 (double sealing flange) front, for driving shaft (R. VI). Since March 1958.	1

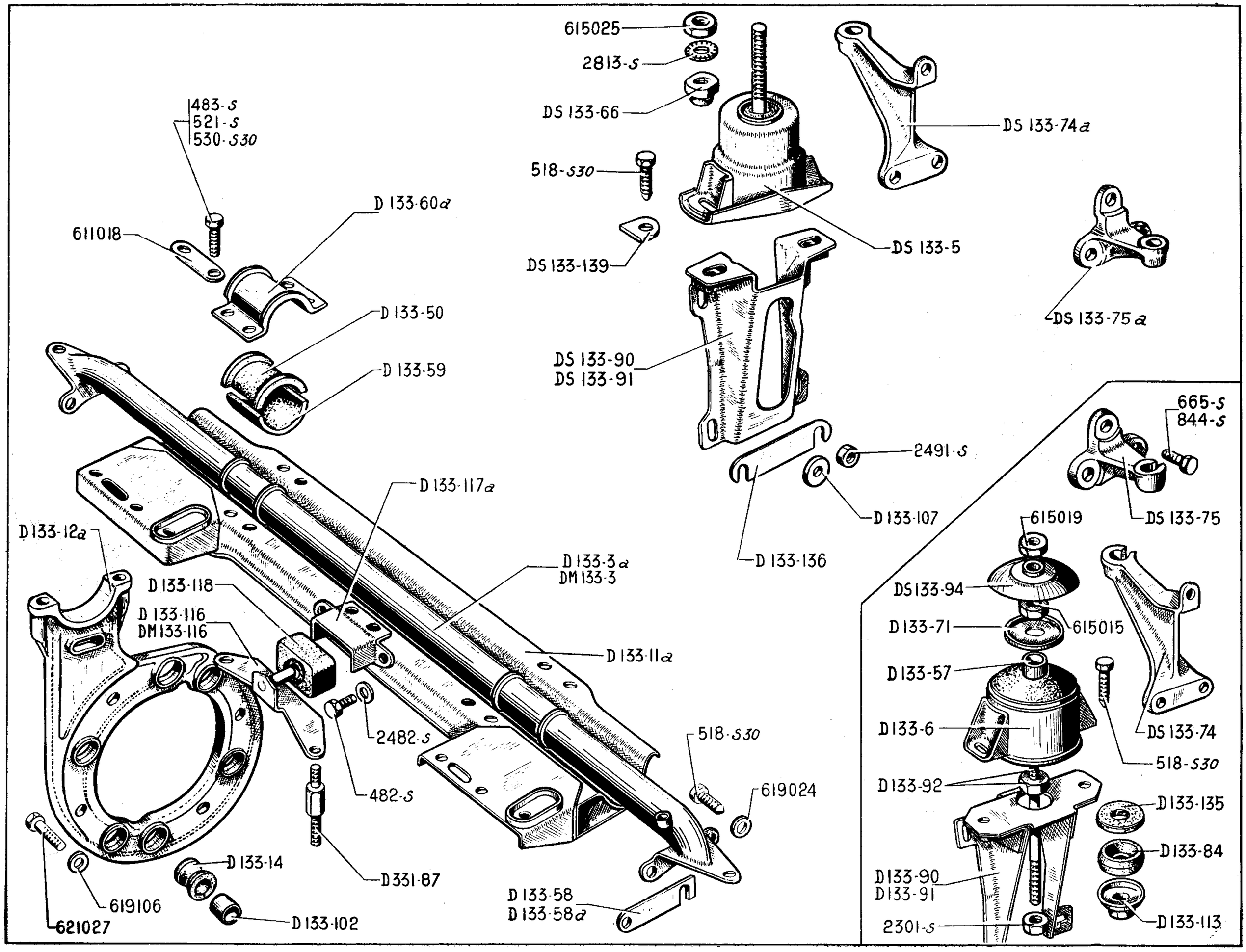
615025
2813-S
DS 133-66
518-S30
DS 133-139
DS 133-74a
DS 133-5
DS 133-75a
483-S
521-S
530-S30
D 133-60a
611018
D 133-50
D 133-59
DS 133-90
DS 133-91
2491-S
665-S
844-S
D 133-117a
D 133-107
DS 133-75
615019
D 133-12a
D 133-136
D 133-3a
DM 133-3
DS 133-94
D 133-118
D 133-116
DM 133-116
D 133-71
615015
D 133-11a
D 133-57
D 133-6
DS 133-74
2482-S
518-S30
518-S30
482-S
619024
D 133-92
D 133-135
D 133-14
D 133-84
D 331-87
D 133-90
D 133-91
619106
D 133-58
D 133-58a
D 133-102
2301-S
D 133-113
621027

NUMBER	DESCRIPTION	No. OFF
	FRONT **Gearbox**	
D 133-3a	Crossmember, front, upper, fixed by two caps. Until November 1957. Replaces fixing by three caps.	1
DM 133-3	Crossmember, front, upper, fixed by two caps. Since November 1957.	1
D 133-11a	Crossmember, front, lower, fixed by two caps. Replaces fixing by three caps.	1
D 133-12a	Arm, front, right and left hand.	2
D 133-14	Rubber bearing for front bracket 14 mm diameter 20.5 mm.	12
D 133-50	Rubber half bush, upper for front suspension, length 58 mm, 32 mm high. Until January 1957. Since January 1957.	9 3 2
D 133-58	Packing for crossmember, front, upper 1 mm thick.	As nes.
D 133-58a	Packing for crossmember, front, upper 2 mm thick.	As nec.
D 133-59	Rubber half bush lower for front, suspension, length 58 mm, 28.5 mm high. Until January 1957. Since January 1957.	3 2
D 133-60a	Clamp, right and left hand on upper front crossmember four holes 10.75 mm diameter.	2

NUMBER	DESCRIPTION	No. OFF
D 133-102	Bush 9 x 14 x 19 for front bracket rubber bearing.	12
D 133-116	Bracket for end thrust block. Until November 1957.	1
DM 133-116	Bracket for end thrust block. Since November 1957.	1
D 133-117a	Housing for end thrust block.	1
D 133-118	End thrust block 51 x 30 x 30, 1 hole 12.5 mm. diameter	1
D 331-87	Stud securing end thrust block bracket.	2
482-S	Screw, hex. head 7 diameter 12.5 long fixing thrust block housing on front crossmember (R. III).	2
483-S	Screw, hex. head, 7 diameter 15 long securing centre cap (R. III).	4
518-S-30	Screw, hex. head pointed 9 diameter 30 long securing upper front crossmember on sidemember. (R. III).	6
521-S	Screw, hex. head 9 diameter 16 long securing lower crossmember on front bracket (R. III).	4
530-S-30	Screw, hex. head pointed 9 diameter 22 long securing right and left hand caps on front bracket (R. III).	4
2.482-S	Washer 7.5 x 14 for screw securing thrust block housing (R. III).	4
611.018	Lockwasher, double, 10.3 diameter holes for left and right hand cap screws (R. III).	4

NUMBER	DESCRIPTION	No. OFF
619.024	Washer for screws securing upper front crossmember on sidemember (R. II).	6
619.106	Washer 9.5 x 24 x 2 under head of screws securing front bracket (R. III).	12
621.027	Screw, hex. head 9 diameter 50 long securing front bracket (R. III).	12
	REAR OF ENGINE **Until June 1959**	
D 133-6	Flexible suspension block, rear without pin.	2
D 133-57	Distance piece 12.5 x 18 x 38.5 for rear flexible block.	2
D 133-71	Upper locking cup for rear flexible block 50 mm diameter height 9 mm, 1 hole 12 mm diameter.	2
DS 133-74	Rear suspension bracket, right hand, hole for pin 12 mm diameter.	1
DS 133-75	Rear suspension bracket, left hand, hole for pin 12 mm diameter.	1
D 133-84	Flexible buffer, lower for rear flexible block.	2
D 133-90	Bracket, rear right hand.	1
D 133-91	Bracket, rear left hand.	1
D 133-92	Pin 12 diameter 195 long with welded nut securing rear flexible block.	1

NUMBER	DESCRIPTION	No. OFF
DS 133-94	Protection cap for rear flexible block, left-hand with welded nut.	1
D 133-107	Washer, 7.5 x 26 x 4, for nuts securing rear supports on reinforcements.	8
D 133-113	Cup with welded nut for lower buffer on rear flexible block, 32 mm diameter.	2
D 133-135	Washer, fibre, 12.5 x 43 x 6, with rubber washer stuck on for protecting rear flexible block.	2
D 133-136	Packing for adjusting rear bracket.	As nec.
518-S 30	Screw, hex. head, 9 diameter x 30 long, securing rear flexible block on bracket (R. III).	4
665-S	Screw, hex. head, 8 diameter x 20 long, securing rear suspension block bracket on cylinder block (R. III).	2
844-S	Screw, hex. head, 10 diameter x 20 long, securing rear suspension block bracket on cylinder block (R. III).	4
2.301-S	Nut, hex., 12 diameter x 125 pitch, for tightening lower end of flexible block centre bolt (R. III).	2
2.491-S	Nut, hex., 7 diameter x 100 pitch, for tightening rear bracket on reinforcements (R. III).	8
615.015	Nut, hex., 12 diameter x 125 pitch, for locking cup for rear flexible block (R. III).	2
615.019	Nut, hex., 12 diameter x 125 pitch, for tightening upper end of rear flexible block on arm (R. III).	2

NUMBER	DESCRIPTION	No. OFF
	REAR OF ENGINE **Since June 1959**	
DS 133-5	Flexible suspension block, rear with 16 mm bolt. Until September '62.	2
DS 133-5a	Flexible suspension block, rear, with 16 mm spindle (marked green). Since September 1962.	2
DS 133-66	Nut, round (2 flats), 16 diameter x 125 pitch for adjustment of rear flexible block.	2
DS 133-74a	Rear suspension bracket, right-hand, hole for 16 mm bolt. Until September 1962.	1
DS 133-74c	Rear suspension bracket, right-hand, hole for 16 mm spindle. Since September 1962.	1
DS 133-75a	Rear suspension bracket, left-hand, hole for 16 mm bolt. Until September 1962.	1
DS 133-75c	Rear suspension bracket, left-hand, hole for 16 mm spindle. Since September 1962.	1
DS 133-90	Bracket, rear, right-hand. Until September 1962.	1
DS 133-90a	Bracket, rear, right-hand. Since September 1962.	1
DS 133-91	Bracket, rear, left-hand. Until September 1962.	1

NUMBER	DESCRIPTION	No. OFF
DS 133-91a	Bracket, rear, left-hand. Since September 1962.	1
DF 133-97	Shield protecting rear flexible suspension block, right-hand (R. VI). Since September 1962.	1
D 133-107	Washer, 7.5 x 26 x 4, for nuts securing rear supports on reinforcements.	8
D 133-136	Packing for rear support.	As nec.
DS 133-139	Thrust plate for screws securing rear flexible block on engine bracket, 1 hole 9.5 diameter.	4
487-S 30	Screw, hex. head, pointed, 7 diameter x 25 long, securing rear brackets on reinforcements (R. III).	8
518-S 30	Screw, hex. head, 9 diameter x 30 long, securing rear flexible block on bracket (R. III).	4
665-S	Screw, hex. head, 8 diameter x 20 long, securing rear support arm on cylinder block (R. III).	2
844-S	Screw, hex. head, 10 diameter x 20 long, securing rear support arm on cylinder block (R. III).	4
2.491-S	Nut, hex., 7 diameter x 100 pitch, tightening rear supports on reinforcements (R. III).	8
2.813-S	Washer, shakeproof, 16.5 x 26, for nut locking rear flexible block (R. VI).	2
615.025	Nut, hex., 16 diameter x 125 pitch, locking rear flexible block (R. III).	2

The numbers underlined indicate new parts and do not appear on the illustrations.

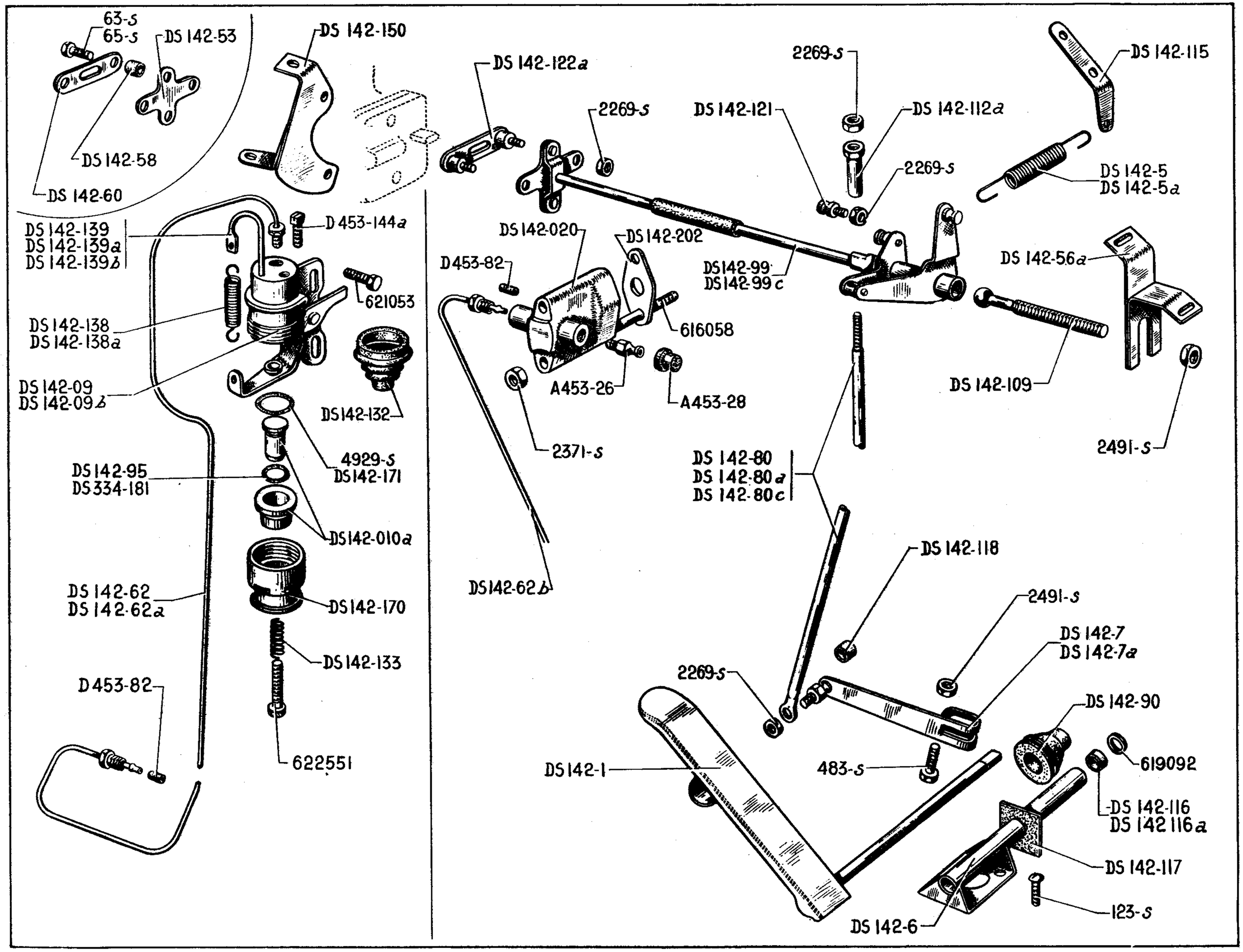
63-S
65-S
DS 142-53
DS 142-58
DS 142-60
DS 142-150
DS 142-122a
2269-S
DS 142-121
2269-S
DS 142-112a
2269-S
DS 142-115
DS 142-5
DS 142-5a
DS 142-139
DS 142-139a
DS 142-139b
D 453-144a
DS 142-020
DS 142-202
D453-82
DS142-99
DS142-99c
DS 142-56a
621053
DS 142-138
DS 142-138a
616058
DS 142-09
DS 142-09b
A453-26
A453-28
DS 142-109
DS142-132
2371-S
2491-S
4929-S
DS142-171
DS 142-95
DS 334-181
DS 142-80
DS 142-80a
DS 142-80c
DS142-010a
DS 142-118
DS 142-62
DS 142-62a
DS142-170
DS142-62b
2491-S
DS 142-7
DS 142-7a
DS142-133
2269-S
DS 142-90
D 453-82
DS142-1
483-S
619092
622551
DS 142-116
DS 142 116a
DS 142-117
123-S
DS 142-6

NUMBER	DESCRIPTION	No. OFF
A 453-26	Bleed screw for front brake left-hand on accelerated idling device. Since February 1961.	1
A 453-28	Cap for bleed screw (R. VI). Since February 1961.	1
DS 142-09	*Accelerated idling device. March 1956 – January 1959. Replaced by DS 142-09b, order in addition: 1–DS 142–62, 1–D 453–82.*	1
DS 142-09b	Accelerated idling device. January 1959 - February 1961.	1
DS 142-010a	Cylinder with control piston for accelerated idling device. January 1959 - February 1961.	1
DS 142-020	Body for accelerated idling device with piston and bleed screw. Since February 1961.	1
DS 142-1	Accelerator pedal, 178 mm long, height of stop 26 mm. Until September 1962.	1
DS 142-1a	Accelerator pedal, height of stop 29 mm. Since September 1962.	1
DS 142-5	Return spring for accelerator pedal, 13.5 mm diameter, length 155 mm. Until September 1960.	1
DS 142-5a	Return spring for accelerator pedal, 13.5 mm diameter, length 170 mm. Since September 1960.	1
DS 142-6	Bushed tube for pedal shaft. Until September 1962.	1
DS 142-6a	Bushed tube for pedal shaft. Since September 1962.	1
DS 142-7	Lever on pedal shaft(assembly with two ball joints). Until March 1956.	1

NUMBER	DESCRIPTION	No. OFF
DS 142-7a	Lever on pedal shaft assembly with one ball joint). Since March 1956.	1
DS 142-53	*Flexible plate for carburettor control. Until March 1956. No longer supplied*	2
DS 142-56a	Metal bracket for accelerator control on scuttle.	1
DS 142-58	*Bush between driving plate and flexible plate for carburettor control. (5 × 8 × 8). Until March 1956. No longer supplied.*	2
DS 142-60	*Carburettor actuating plate. Until March 1956. No longer supplied.*	1
DS 142-62	Pipe between accelerated idling control and left-hand front brake. January 1959 - July 1959.	1
DS 142-62a	Pipe between accelerated idling control and left-hand front brake. July 1959 - February 1961.	1
DS 142-62b	Pipe between accelerated idling control and left-hand front brake. Since February 1961.	1
DS 142-80	*Control rod, 610 mm. long (4 mm. diameter on 107 mm. of length). Until March 1956. No longer supplied.*	1
DS 142-80a	*Control rod, 587 mm. long (4 mm. diameter on 85 mm. of length). Until December 1956. No longer supplied.*	1
DS 142-80c	Control rod, 565 mm long (4 mm diameter on 50 mm of length). Since December 1956.	1
DS 142-90	Sealing sleeve for accelerator pedal shaft. Since January 1959.	1
DS 142-95	Ring seal between piston and accelerated idling control cylinder (5.7 x 9.1 x 1.7) (R. VI). Until January 1959.	1

NUMBER	DESCRIPTION	No. OFF
DS 142-99	*Intermediate control (assembly with two ball joints). Until March 1956. No longer supplied.*	1
DS 142-99c	Intermediate control (assembly with 1 ball joint). Since March 1956. Replaces other types with a ball joint.	1
DS 142-109	Ball pin for intermediate control 10 mm diameter, length 70 mm.	1
DS 142-112a	Nut, hex., with shoulder 4 diameter x 75 pitch, total length 15 mm for control rod adjustment: Until March 1956. Since March 1956.	2 1
DS 142-115	Anchor plate for accelerator control return spring.	1
DS 142-116	Rubber washer (anti-rattle) on pedal shaft (10.5 x 16 x 4). Until February 1959.	1
DS 142-116a	Felt washer (anti-rattle) on pedal shaft (9.5 x 17 x 5). Since February 1959.	1
DS 142-117	Rubber plate on pedal shaft. Until January 1959.	1
DS 142-118	Rubber bush (anti-rattle) for control rod ball joint (11 x 16 x 11).	2
DS 142-121	Anchor peg for clutch engagement control spring. Until September 1957.	1
DS 142-122a	*Distance piece between carburettor and intermediate control. March 1956 – December 1956. No longer supplied.*	1
DS 142-132	Dust cover for accelerated idling control. Since March 1956.	1
DS 142-133	Spring beneath accelerated idling control adjusting screw (5.5 x 7.5 x 5 coils). Since March 1956.	1

The numbers underlined indicate new parts and do not appear on the illustrations.

NUMBER	DESCRIPTION	No. OFF
DS 142-138	*Return spring for accelerated idling control. March 1956 – September 1960. Replaced by DS 142-138a; order in addition: 1-DS 142-139b.*	1
DS 142-138a	Return spring for accelerated idling control 54.5 mm long. September 1960 - February 1961.	1
DS 142-139	*Arm for accelerated idling control return spring. Until January 1959. No longer supplied.*	1
DS 142-139a	*Arm for accelerated idling control return spring. January 1959 – September 1960. Replaced by DS 142-139b, order in addition 1-DS 142-138a.*	1
DS 142-139b	Arm for accelerated idling control return spring. September 1960 - February 1961.	1
DS 142-150	Bracket for accelerated idling control on Zenith carburrettor (R. VI). Since December 1956.	1
DS 142-170	Nut, round, 26 diameter 150 pitch retaining accelerated idling control cylinder. January 1959 - February 1961.	1
DS 142-171	Ring seal, 16.7 x 20.5 x 1.9 between cylinder and body of accelerated idling device. January 1959 - February 1961.	1
DS 142-202	Joint, copper, between accelerated idling device and carburettor (R. VI). Feburary 1961 - July 1962.	1
DS 142-202a	Joint, copper, between accelerated idling control and carburettor (R. VI). Since July 1962.	1

NUMBER	DESCRIPTION	No. OFF
DS 334-181	Ring seal 10.5 x 15.9 x 2.7 between piston and cylinder of accelerated idling device (R. VI). January 1959 - February 1961.	1
D 453-82	Rubber lining for pipe connection between accelerated idling control and left hand front brake (4.5 x 6.5 x 11). Since January 1959.	2
D 453-144a	Bleed screw for accelerated idling control (square head 5 x 17, head diameter 4 mm). March 1956 - February 1961.	1
63-S	Screw, hex. head 4 diameter 10 long securing flexible plate on intermediate control rod (R. III). Until March 1956.	2
65-S	Screw, round head 4 diameter 15 long securing flexible plate on carburettor actuating plate (R. III). Until March 1956.	2
123-S	Screw, round head 5 diameter 10 long securing bearing on floor (R. III).	2
483-S	Screw, hex. head 7 diameter 15 long securing lever on pedal (R. III).	1
2.269-S	Nut, hex. 4 diameter 75 pitch (R. III) securing :	
	- flexible plate	2
	- control rod adjustment	
	Until March 1956.	2
	Since March 1956.	1
	- rod on lever.	
	Until March 1956.	4
	Since March 1956.	2
	- anchor peg.	
	Until September 1957.	1

NUMBER	DESCRIPTION	No. OFF
2.371-S	Nut, hex. 6 diameter 100 pitch securing accelerated idling control (R. III). Since February 1961.	2
2.491-S	Nut, hex. 7 diameter 100 pitch (R. III) securing :	
	- support for accelerator control	2
	- intermediate control ball pin	2
	- lever on pedal	1
4.929-S	Ring seal for cap of accelerated idling control body (18.7 x 22.5 x 1.9) (R. VI). March 1956 - January 1959.	1
616.058	Stud 6 diameter 67 long (threaded 10 and 12) securing accelerated idling control (R. I). Since February 1961.	2
619.092	Washer 10.5 x 16 x 1 for rubber washer in pedal shaft (R. I).	1
621.053	Screw, hex, head 5 diameter 0.8 pitch, length under head 20 mm securing accelerated idling control on carburettor (R. VI). Since March 1956.	2
622.551	Screw, round head knurled 5 diameter 27 long for adjustment of accelerated idling control. Since March 1956. (R. I).	1

The numbers underlined indicate new parts and do not appear on the illustrations.

28-PETROL SUPPLY-PETROL TANK-PUMP-PIPING-

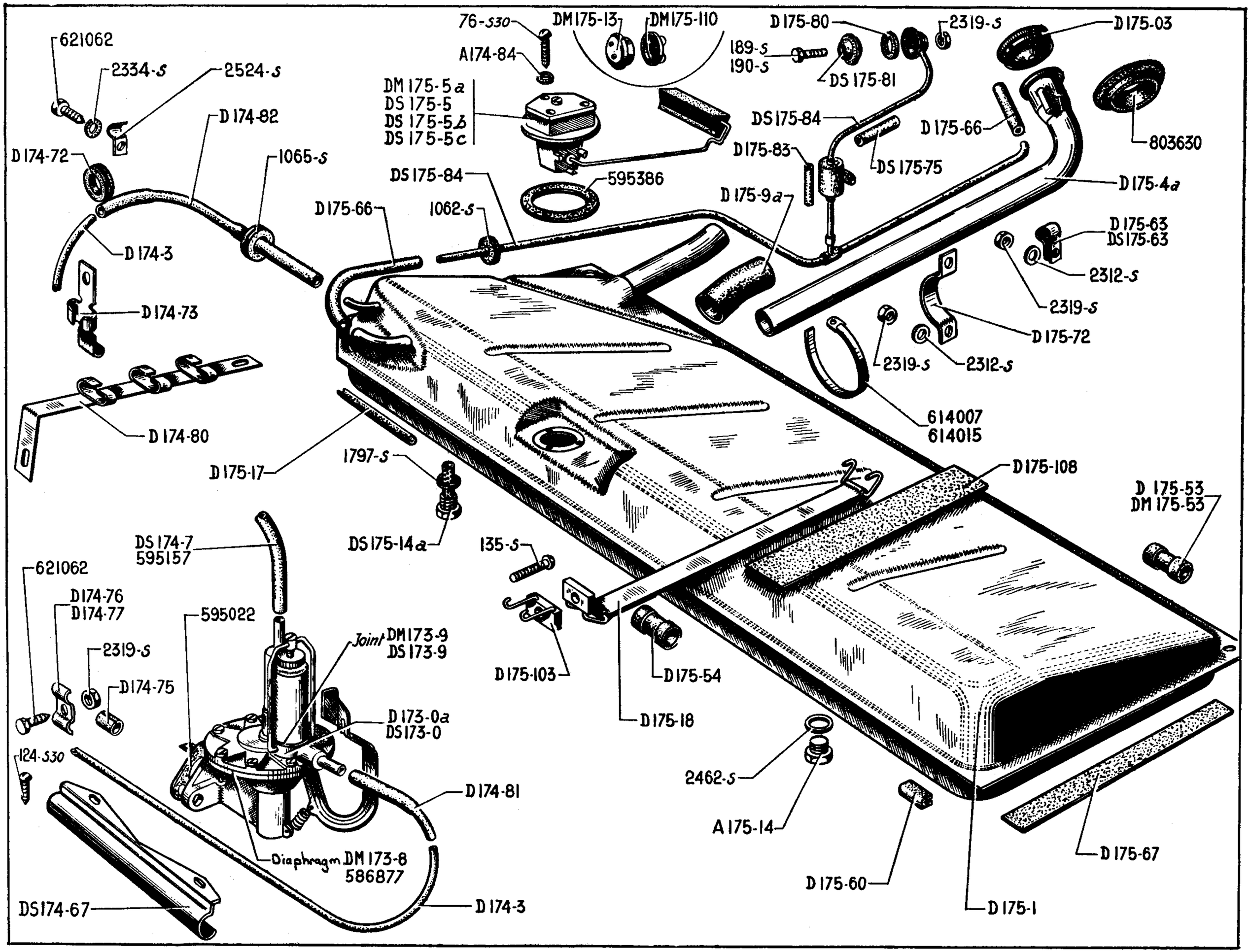

NUMBER	DESCRIPTION	No. OFF
A 174-84	Joint, fibre, 4.5 x 8 x 0.5, for petrol gauge tank unit (R. VI).	3
A 175-14	Drain plug, 8 diameter x 100 pitch, length under head 7 mm (R. VI).	1
D 173-0a	Petrol pump AC (R. VI).	1
DS 173-0	Petrol pump GUIOT (R. VI).	1
DM 173-8	Diaphragm for AC petrol pump (R. VI).	1
DM 173-9	Joint for filter bowl, AC petrol pump (R. VI).	1
DS 173-9	Joint for filter bowl, GUIOT petrol pump (R. VI).	1
D 174-3	Flexible pipe (Nylon) feeding petrol from tank to pump (R. VI). Until September 1962.	1
DM 174-3	Flexible feed pipe (nylon) supplying petrol from tank to pump (R. VI). Since September 1962.	1
DS 174-7	Flexible rubber pipe between pump and carburettor, length 320 mm. Until September 1960.	1
	Since September 1962.	1
DS 174-67	Shield protecting flexible petrol feed pipe. Until September 1962.	1
D 174-72	Rubber grommet, 25 x 40 x 11, carrying flexible feed pipe on centre pillar.	2
D 174-73	Bracket for flexible feed pipe on sidemember.	1
D 174-75	Split rubber bush, 6 x 10 x 15, for protection on flexible petrol feed pipe.	11

NUMBER	DESCRIPTION	No. OFF
D 174-76	Flexible clip with welded screw for securing flexible feed pipe. Until September 1962.	2
D 174-77	Clip, double, securing flexible feed pipe. Until September 1962.	4
	Since September 1962.	7
D 174-80	Support for flexible petrol feed pipe on front pillar.	1
D 174-81	Rubber elbowed connection for flexible pipe on petrol pump.	1
D 174-82	Rubber connection, 6 x 15, for flexible pipe on tank, 280 mm long.	1
D 175-03	Petrol tank filler cap (R. VI).	1
D 175-1	Petrol tank, 65 litres (R. VI).	1
D 175-4a	Petrol filler tube (R. VI).	1
DS 175-5	Petrol gauge tank unit, 6 volts, "Jaeger" (R. VI). Until September 1960.	1
DM 175-5a	Petrol gauge tank unit, 12 volts, "Jaeger" (R. VI). Since September 1961.	1
DS 175-5b	Petrol gauge tank unit, "ED" "Veglia" (R. VI). May 1957 - January 1958.	1
DS 175-5c	Petrol gauge tank unit, 12 volts, "Jaeger" (R. VI). Until September 1961.	1
D 175-9a	Rubber connection, filler tube to tank, 38 x 47, length 163 mm.	1
DM 175-13	Filter for petrol tank air vent pipe (R. VI). Export. Since May 1960.	1

NUMBER	DESCRIPTION	No. OFF
DS 175-14a	Drain plug with filter and joint, reserve side, (20 x 150), 21 mm across flats (R. VI).	1
D 175-17	Sealing strip for petrol tank housing panel (R. VI).	1
D 175-18	Strap for securing reservoir.	2
D 175-53	Transverse rubber packing tube for tank, 298 mm long. Until January 1958.	2
DM 175-53	Transverse rubber packing tube for tank, 47 mm long. Since January 1958.	4
D 175-54	Rear rubber packing tube for tank strap, 50 mm long.	2
D 175-60	Rubber packing piece for tank, 40 mm long (R. VI).	6
D 175-63	Clip securing air vent pipe. Until February 1958.	2
DS 175-63	Clip securing air vent pipe (R. VI). Since February 1958.	2
D 175-66	Connecting sleeve, rubber, 11 x 18 x 147, for air vent pipe.	2
D 175-67	Rubber strap beneath tank, 25 x 2 x 380.	5
D 175-72	Clip securing filler tube, 39 mm high, 2 slots 60 mm between centres.	1
DS 175-75	Rubber sleeve, 4 x 8 x 30, for air vent tube protection. Since February 1958.	3
D 175-80	Rubber washer, 19 x 29 x 3, sealing cup on air vent pipe.	1
DS 175-81	Outer cup for air vent tube (R. VI). Since February 1958.	1

The numbers underlined indicate new parts and do not appear on the illustrations.

NUMBER	DESCRIPTION	No. OFF
D 175-83	Connecting sleeve, rubber, for air vent tube (2.5 x 9 x 40). Until February 1958.	1
DS 175-84	Air tube on tank (Rilsan) (R. VI). Since February 1958. Replaces earlier type; order in addition: 2-DS 175-63, 3-DS 175-75, 1-190-S (R. III).	1
D 175-103	Front support on body for tank strap.	2
D 175-108	Protecting piece for tank, 540 mm, 50 mm wide.	2
DM 175-110	Support for air filter for tank (R. VI). Export. Since May 1960.	1
76-S 30	Screw, round head, 4 diameter x 30 long, securing petrol gauge tank unit (R. III).	3
124-S 30	Screw, round head, 5 diameter x 12.5 long, securing protection plate for flexible feed pipe (R. III).	4
135-S	Screw, round head, 5 diameter x 40 long, securing tank straps (R. III).	2
189-S	Screw, raised head, countersunk, 5 diameter x 25 long, securing cup for air vent pipe (R. III). Until February 1958.	1
190-S	Screw, raised head countersunk, 5 diameter x 35 long, securing cup (R. III). Since February 1958.	1

NUMBER	DESCRIPTION	No. OFF
1.062-S	Grommet, rubber, 12 x 21 x 5, for air vent pipe (R. III).	2
1.065-S	Grommet, rubber, 22 x 18 x 8, for flexible feed pipe on body (R. III).	3
1.797-S	Joint, fibre, 20.4 x 26 x 2, for drain plug, reserve side (R. VI).	1
2.312-S	Washer, 5.5 x 12 (R. III) for nuts securing:	
	- filler tube clip.	2
	- air vent tube.	2
2.319-S	Nut, hex., 5 diameter x 75 pitch (R. III) securing:	
	- filler tube clip.	2
	- air vent tube.	2
	- air vent cup screw.	1
	- plate with welded screw.	2
2.334-S	Washer, shakeproof, 5.2 x 9.4, for screws securing clips (R. VI).	
	- Until September 1962.	7
	- Since September 1962.	13
2.462-S	Joint, fibre, 8.2 x 12 x 1, for drain plug (R. VI).	1
2.524-S	Clip, single, securing flexible feed pipe (R. III).	1

NUMBER	DESCRIPTION	No. OFF*
2.659	Screw, hex. head, 5 diameter x 13 long, securing double plate on crossmember (R. III). Since September 1962.	3
586.877	Diaphragm for GUIOT petrol pump (R. VI).	1
595.022	Joint between pump and cylinder block, 66 mm between hole centres (R. VI).	1
595.157	Flexible rubber pipe between pump and carburettor, 190 mm long (R. VI). September 1960 - September 1962.	1
595.386	Joint, rubber, 36 x 55 x 2 (3 holes 4.5 diameter) for petrol gauge tank unit (R. VI).	1
614.007	Clip securing connecting sleeve on air vent pipe, 190 mm long (R. VI).	4
614.015	Clip securing connecting sleeve, 360 mm long (R. VI).	2
621.050	Screw, hex. head, 5 diameter x 20 long, securing double plate on sidemember (R. VI). Since September 1962.	7
621.062	Screw, hex. head, 5 diameter x 14 long, securing clip for flexible feed pipe (R. III). Until September 1962.	6
803.630	Collar, 34 x 84 x 15, for filler tube (R. IV).	1

The numbers underlined indicate new parts and do not appear on the illustrations.

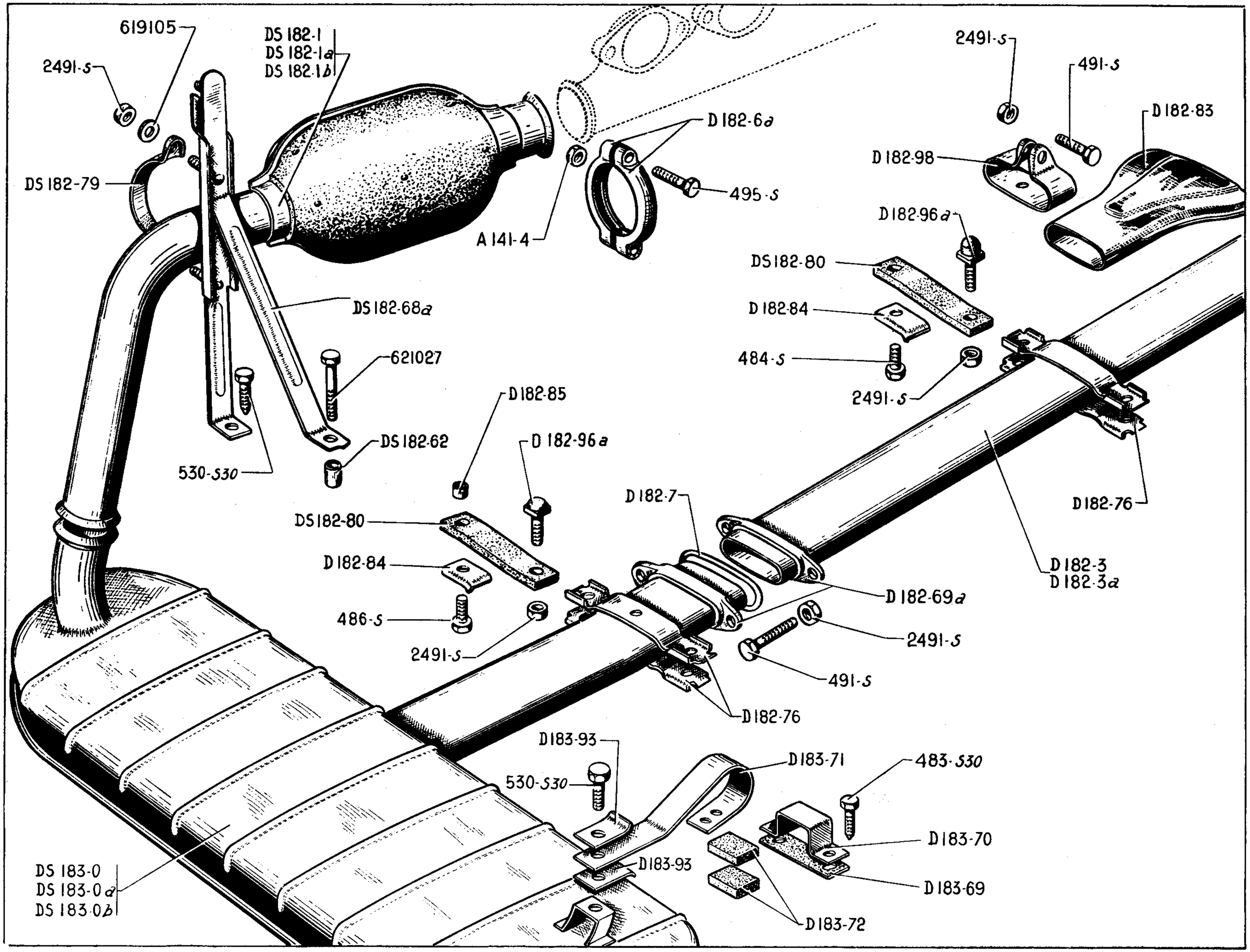
619105
2491-S
DS 182-1
DS 182-1a
DS 182-1b
DS 182-79
A 141-4
D 182-6a
495-S
2491-S
491-S
D 182-83
D 182-98
D 182-96a
DS 182-80
D 182-84
484-S
2491-S
DS 182-68a
621027
530-S30
DS 182-62
D 182-85
D 182-96a
DS 182-80
D 182-84
486-S
2491-S
D 182-7
D 182-76
D 182-3
D 182-3a
D 182-69a
2491-S
491-S
D 182-76
D 183-93
530-S30
D 183-71
483-S30
D 183-70
D 183-93
D 183-69
D 183-72
DS 183-0
DS 183-0a
DS 183-0b

NUMBER	DESCRIPTION	No. OFF
	Until February 1958	
A 141-4	Nut, hex. 7 diameter 100 pitch securing half clips.	4
DS 182-1	*Expansion chamber. Until February 1956. Replaced by DS 182-54; order in addition: 1-DS 181-1a, 1-DS 181-4b, 1-DS 181-5b, 1-DS 181-6a, 1-DS 183-0b, 1-D 182-3a (R. VI).*	1
DS 182-1a	*Expansion chamber. February 1956 - June 1957. Replaced by DS 182-54.*	1
DS 182-1b	*Expansion chamber without horn protection shield. Since June 1957. Replaced by DS 182-54.*	1
D 182-3	Exhaust outlet pipe under body 3,420 mm long. Until November 1956. (R. VI).	1
D 182-3a	Exhaust outlet pipe under body without clip, 3,336 mm long (R. VI). Since November 1956.	1
D 182-6a	Half clip for assembling expansion chamber on manifold and silencer.	4
D 182-7	Joint, oval between exhaust pipe and outlet pipe under body (R. VI).	1
DS 182-62	Distance piece 9.5 x 18 x 18 for bracket securing expansion chamber.	1
DS 182-68a	Bracket for clip for expansion chamber, with welded screws and bonnet support plate.	1
D 182-69a	Flanged end on silencer pipe and outlet pipe (R. VI).	2
D 182-76	Half clip securing exhaust pipe under body.	6

NUMBER	DESCRIPTION	No. OFF
DS 182-79	Clip securing expansion chamber on bracket.	1
DS 182-80	Rubber strip 90 x 30 x 8 securing exhaust pipe under body, 2 holes 10.2 diameter at 62 mm between centres (without distance piece).	6
D 182-83	Fish tail for exhaust pipe.	1
D 182-84	Plate for rubber strips securing exhaust pipe under body (28 x 28 x 1.5) 1 hole 7.5 mm (R. VI).	6
D 182-85	Distance piece for tightening strap (R. VI).	12
D 182-96a	Screw, square head 7 diameter 21 long with rubber buffer 15 mm thick assembling centre and rear half clips on exhaust pipes.	4
D 182-98	Clip securing fish tail to exhaust pipe.	1
DS 183-0	*Exhaust silencer. Until February 1956. Replaced by DS 183-0b; order in addition: 1-DS 181-1a, 1-DS 181-4b, 1-DS 181-5b, 1-DS 181-6a, 1-DS 182-54, 1-D 182-3a (R. VI).*	1
DS 183-0a	*Exhaust silencer. February 1956 – November 1956. Replaced by DS 183-0b; order in addition: 1-D 182-3a (R. VI).*	1
DS 183-0b	Exhaust silencer, length of outlet pipe 760 mm. Since November 1956.	1
D 183-69	Fibre plate 72 x 35 x 2 between crossmember and clamp securing silencer spring support (R. VI).	1
D 183-70	Clamp securing silencer spring support.	1
D 183-71	Spring support for silencer.	1
D 183-72	Rubber packing piece 35 x 27 x 10 positioning silencer spring support.	2

NUMBER	DESCRIPTION	No. OFF
D 183-93	Plate securing silencer spring, 1 hole 9.5 mm.	2
483-S-30	Screw, hex. head 7 diameter 15 long, securing clamp holding silencer spring support (R. III).	2
484-S	Screw, hex. head 7 diameter 17.5 long (R. III) assembling :	
	- half clips centre and rear for exhaust pipe on silencer.	4
	- rubber strips for exhaust pipe on body at rear.	2
486-S	Screw, hex. head 7 diameter 22.5 long, securing rubber strips for exhaust pipe on the front and centre of the body (R. III).	4
491-S	Screw, hex. head 7 diameter 35 long (R. III) securing:	
	- clip for fish tail on exhaust pipe.	1
	- assembling both exhaust pipes.	2
495-S	Screw, hex. head 7 diameter 45 long, for half clips securing expansion chamber (R. III).	4
530-S-30	Screw, hex. head pointed 9 diameter 22 long (R. III) securing :	
	- expansion chamber bracket	1
	- spring on support for silencer	1
2.491-S	Nut, hex. 7 diameter 100 pitch (R. III) for tightening :	
	- clip to expansion chamber bracket	2
	- screws assembling the half clips on exhaust pipe.	6
	- exhaust pipe assembly.	2
	- screw securing fish tail to exhaust pipe.	1
619.105	Washer 7.5 x 14 x 2 for nuts securing expansion chamber to bracket (R. III).	2
621.027	Screw, hex. head 9 diameter 50 long securing bracket for expansion chamber (R. III).	1

NUMBER	DESCRIPTION	No. OFF
	February 1958 – September 1962	
A 141-4	Nut, hex. 7 diameter 100 pitch, securing half clips.	4
DS 182-1b	*Expansion chamber with pipe. Until November 1959. Replaced by: DS 182-54.*	1
DM 182-3b	Outlet pipe (steel) left-hand. Since May 1960. (R. VI). Replaced by aluminium pipe; order in addition 1-DM 182-7a (R. VI).	1
DM 182-3c	Outlet pipe (steel) right-hand. Since May 1960. (R. VII). Replaced by aluminium pipe; order in addition 1-DM 182-7a (R. VI).	1
D 182-6a	Half clip for assembling expansion chamber with pipe.	4
DM 182-7	Joint, round 28 x 35 x 3.5 between exhaust pipe and outlet pipe under body (R. VI). Until May 1960.	2
DM 182-7a	Joint, round (copper) 28 x 35 x 3.5 between exhaust pipe and outlet pipe (R. VI). Since May 1960.	2
DS 182-54	Front pipe without expansion chamber non-developed length 623 mm. Since November 1959.	1
DS 182-62	Distance piece 9.5 x 18 x 18 for bracket carrying clip securing expansion chamber.	1
DM 182-64	Half clip securing rear of outlet pipes.	
	Until June 1961.	2
	Since June 1961.	4
DS 182-68a	Bracket for clip of expansion chamber with welded screws.	1
DM 182-69	Flange for assembling outlet pipes.	2
DM 182-76	Half clip securing outlet pipes under body.	4
DS 182-79	Clip securing expansion chamber on bracket.	1

NUMBER	DESCRIPTION	No. OFF
DS 182-80	Rubber strap 90 x 30 x 8 securing outlet pipes under body, 2 holes 10.2 mm at 62 mm between centres (without distance pieces).	5
D 182-84	Plate 28 x 28 x 1.5, one hole 7.5 mm diameter securing rubber straps for outlet pipes (R. VI).	4
D 182-85	Distance piece 8 x 10 x 7 for rubber straps (R. VI).	8
DS 182-87	Rubber buffer protecting outlet pipes.	6
DS 182-91	Screw, round head (2 flats) for half clips securing front pipe on manifold and expansion chamber. Since May 1960.	4
DM 182-101	Clip securing rear of outlet pipes.	2
DM 183-0	Exhaust silencer.	1
D 183-69	Fibre plate 72 x 35 x 2 between crossmember and clamp securing silencer spring support (R. VI). Until March 1959.	1
D 183-70	Clamp securing silencer spring support, 52 mm between centres. Until March 1959.	1
DS 183-70	Clamp securing silencer spring support, 60 mm between centres. Since March 1959.	1
D 183-71	Silencer spring support, total length 111 mm. Until March 1959.	1
DS 183-71	Silencer spring support, total length 115 mm. Since March 1959.	1
D 183-72	Rubber packing piece 35 x 27 x 10 for positioning silencer spring support. Until March 1959.	2
DS 183-72	Rubber packing piece, slotted 35 x 23.5 x 17 for positioning silencer spring support. Since March 1959.	2

NUMBER	DESCRIPTION	No. OFF
D 183-93	Plate securing silencer spring support 40 x 27 x 1.8 one hole 9.5 mm.	2
483-S 30	Screw, hex. head 7 diameter 15 long securing clamp holding silencer spring support (R. III).	2
484-S	Screw, hex. head 7 diameter 17.5 long (R. III) for assembling:	
	- clamp for outlet pipes.	2
	- half clips, front and centre for outlet pipes.	4
	rubber strips for centre and rear supports.	3
486-S 30	Screw, hex. head 7 diameter 22.5 long pointed for tightening rubber strips on the silencer outlet pipes (R. III).	2
487-S	Screw, hex. head 7 diameter 22 long for tightening rear clips for outlet pipes (R. III).	1
497-S	Screw, hex. head 7 diameter 50 long for tightening half clips securing expansion chamber (R. III). Until May 1960.	4
530-S 30	Screw, hex. head pointed 9 diameter 22 long securing bracket for expansion chamber clip (R. III).	1
533-S 30	Screw, hex. head pointed 9 diameter 18 long securing plate to silencer spring bracket (R. III).	1
2.319-S	Nut, hex. 5 diameter 75 pitch for screws securing rear half clips for outlet pipes. (R. III).	1
2.338	Screw, hex. head 5 diameter 20 long securing rear half clips for outlet pipes (R. III). Until June 1961.	1
	Since June 1961.	2
2.491-S	Nut, hex. 7 diameter 100 pitch (R. III) securing:	
	- clip to expansion chamber bracket and front pipe on bracket.	2
	- rubber strip on front half clip, centre and rear half clips.	6
	- rear outlet pipe clips.	2
619.105	Washer, 7.5 x 14 x 2 for nut securing expansion chamber clip on bracket (R. III).	2
621.027	Screw, hex. head 9 diameter 50 long securing bracket for expansion chamber (R. III).	1

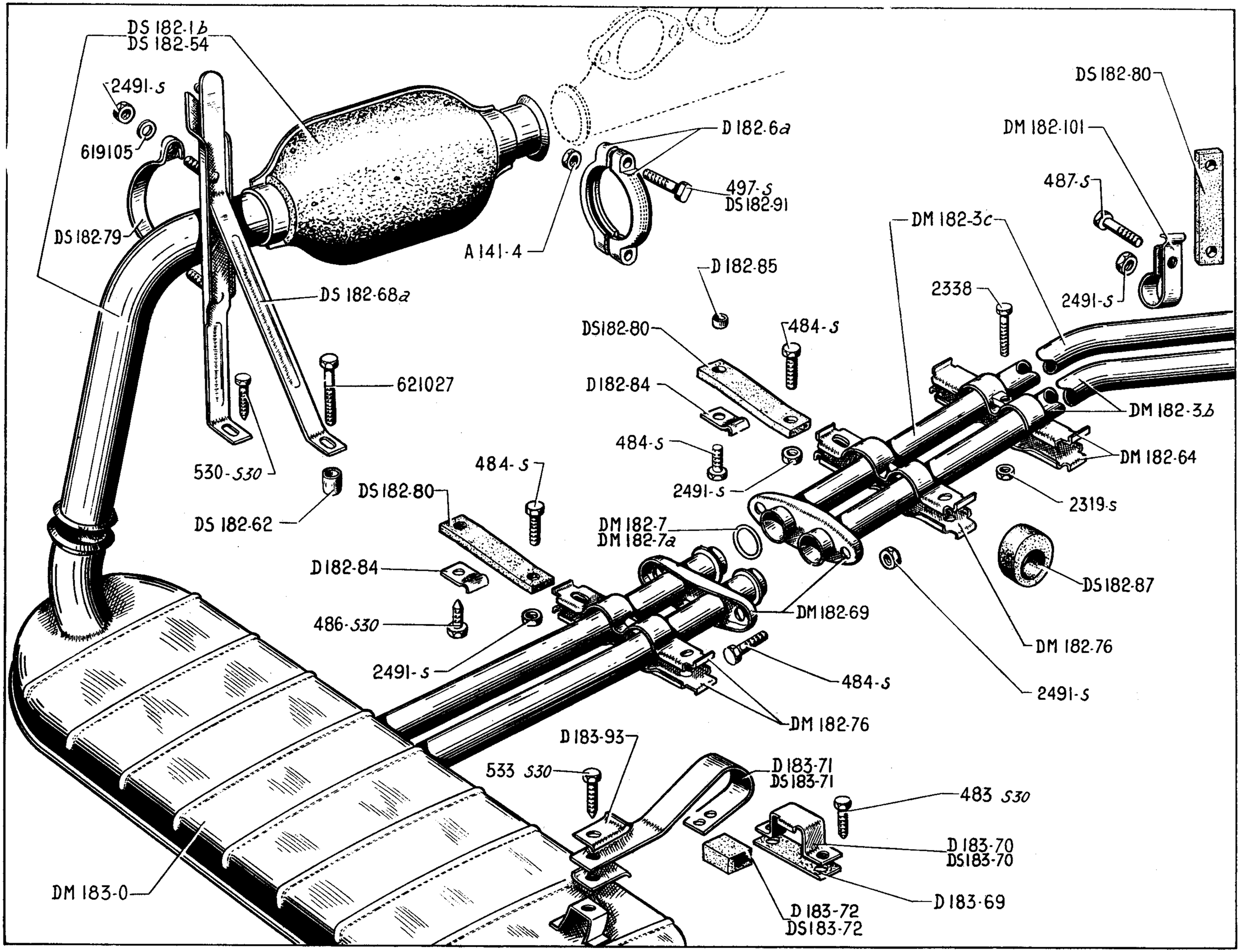
DS 182-1b
DS 182-54
2491-s
619105
DS 182-79
DS 182-68a
621027
530-S30
DS 182-62
484-s
DS182-80
D182-84
486-S30
2491-s
A 141-4
D 182-6a
497-s
DS 182-91
D 182-85
DS182-80
484-s
D182-84
484-s
2491-s
DM 182-7
DM 182-7a
DM 182-69
484-s
DM 182-76
DS 182-80
DM 182-101
487-s
2491-s
DM 182-3c
2338
DM 182-3b
DM 182-64
2319-s
DS 182-87
DM 182-76
2491-s
D 183-93
533 S30
D 183-71
DS 183-71
483 S30
D 183-70
DS183-70
D 183-69
D 183-72
DS183-72
DM 183-0

NUMBER	DESCRIPTION	No. OFF
	Since September 1962	
A 141-4	Nut, hex. 7 diameter 100 pitch securing half clips	2
DS 182-3	Outlet pipe under body (R.VI).	1
D 182-6a	Half clip assembling connecting pipe on front pipe.	2
DS 182-51	Front exhaust pipe	1
DS 182-54a	Connecting pipe between front pipe and silencer (R.VI).	1
DS 182-69	Clip securing outlet pipe under body (front part)	1
DS 182-76	Half clip, upper, securing outlet pipe under body	1
DS 182-76a	Half clip, lower, securing outlet pipe under body	1
DS 182-78	Clip, assembling connecting pipe on front pipe and silencer	2
DS 182-79a	Clip, securing connecting pipe	1
DS 182-80	Band, rubber 90 x 30 x 8 for outlet pipe under body, 2 holes 10.2 diameter, 62 mm. between centres	3
DS 182-84	Plate 28 x 28 x 1.5 one hole 7.5 diameter securing rubber band (R.VI).	2
D 182-85	Distance piece 10 x 8 x 7 for rubber band (R.VI).	6
DS 182-87	Buffer, rubber for protection of outlet pipe	2

NUMBER	DESCRIPTION	No. OFF
DS 182-91	Screw, round head (2 flats) for half clips assembling connecting pipe on front pipe	2
DS 182-101	Clip securing outlet pipe under body (rear part)	1
DS 182-116	Plate securing front exhaust pipe	1
DS 182-0c	Exhaust silencer	1
DS 183-45	Support clamp, securing silencer spring support, left hand	1
DS 183-45a	Support clamp, securing silencer spring support, right hand	1
DS 183-61	Shield for connecting pipe	1
DS 183-62	Shield for exhaust silencer	1
DS 183-70a	Clamp, securing silencer spring support	2
DS 183-71a	Spring support for silencer	2
DS 183-83	Washer (fibre) 24 x 8.2 x 2 for screws securing shields (R.VI).	8
DS 183-93	Plate 40 x 27 x 1.8 one hole 7.5 diameter securing silencer spring support	4
295-S 30	Screw hex. head pointed 5 diameter 16 long securing shields (R.III).	8
306-S 30	Screw, hex. head pointed 6 diameter 20 long, securing shield for connecting pipe on shield for silencer (R.III).	2
485-S 30	Screw, hex. head pointed, 7 diameter 20 long, securing clamp supports (R.III).	6

NUMBER	DESCRIPTION	No. OFF
486-S	Screw, hex. head 7 diameter 22.5 long (R.III) securing:	
	- clip on connecting pipe	2
	- clip on outlet pipe	3
	- flexible band on support and clip	2
487-S 30	Screw, hex. head pointed 7 diameter 25 long securing flexible under body (R.III).	2
488-S	Screw, hex. head 7 diameter 28 long securing plate tightening silencer spring support (R.III).	2
2.363-S	Washer plain 6.5 x 14 for screws securing shield for connecting pipe on shield for silencer (R.III).	2
2.482-S	Washer plain 7.5 x 14 for screws securing clip and flexible band (R.III).	11
2.491-S	Nut, hex. 7 diameter 100 pitch (R.III) securing:	
	- fixing clips	5
	- flexible band	2
	- clamp on support	4
2.602-S	Washer plain, 10.5 x 22 for screws securing front pipe on plate (R.III).	1
88.613	Washer plain 7.5 x 30 x 2.4 for screw securing clamp support (R.III).	6
615.732	Nut clips for screws securing screen for connecting pipe on silencer shield (R.VI).	2
615.753	Nut, special for tightening clip on plate fixing front pipe (R.VI).	2
619.133	Washer plain 5.25 x 15 x 1.5 for screws securing shields (R.VI).	8
621.400	Screw, 10 diameter 28 long tightening plate securing front pipe (R.VI).	1

36-CONTACT BREAKER AND DUCELLIER COIL-IGNITION CIRCUIT-IGNITION CONTROL

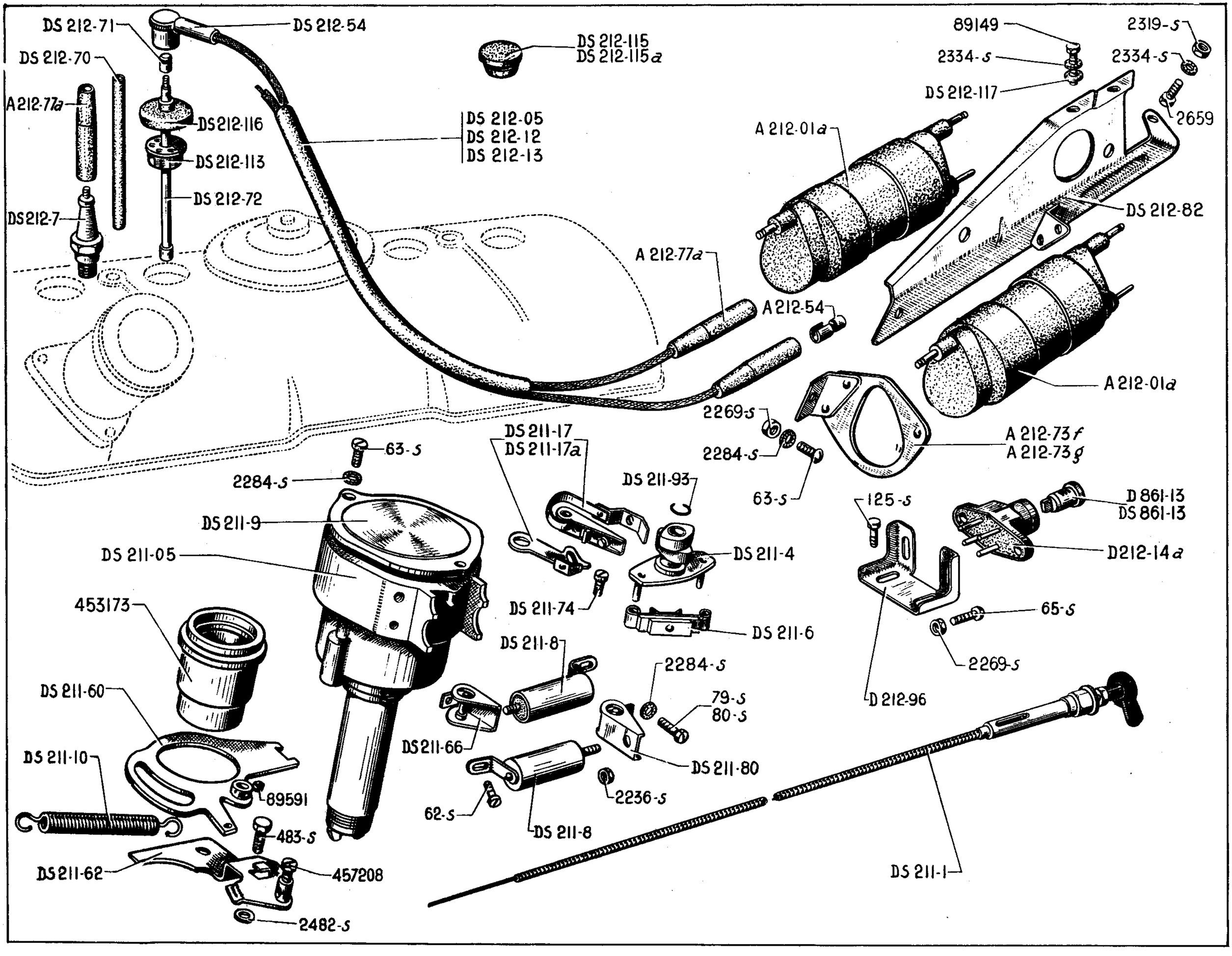

NUMBER	DESCRIPTION	No. OFF
	Until July 1959	
A 212-01a	*Ignition coil with flexible insulation. Replaced by AZU 212-01 (R. VI); order in addition: 2-AZ 511-32 (R. VI).*	2
A 212-54	Terminal end for spark plug lead, coil side 29.5 long (R. VI).	4
A 212-73f	Bracket for coil, upper rear R.H. and lower front L.H.	2
A 212-73g	Bracket for coil, upper front R.H. and lower rear L.H.	2
A 212-77a	Rubber protection sleeve 6.5 x 15 x 60 (R. VI).	
	- spark plug end.	4
	- coil end.	4
DS 211-05	Contact breaker complete (R. VI).	1
DS 211-1	Ignition control 495 mm long (R. VI).	1
DS 211-4	Cam with drive (R. VI).	1
DS 211-6	Automatic advance weights (R.VI).	2
DS 211-8	Condenser (R. VI).	2
DS 211-9	Cover for contact breaker (R. VI).	1
DS 211-10	Return spring for contact breaker, outside diameter 9 mm length 70 mm.	1
DS 211-17	Contact breaker complete, lower (R. VI).	1
DS 211-17a	Contact breaker complete, upper (R. VI).	1
DS 211-60	Lever for ignition control.	1

NUMBER	DESCRIPTION	No. OFF
DS 211-62	Bracket with trunnion for holding contact breaker.	1
DS 211-66	Terminal clip, upper for condenser (R. VI).	1
DS 211-74	Screw for fixing contact supports (R. VI).	2
DS 211-80	Terminal lower for condenser (R. VI).	1
DS 211-93	Circlip securing cam (R. VI).	1
DS 212-05	Spark plug leads to No. 1 and No. 2 cylinders, assembly in sheath.	1
DS 212-7	Spark plug "Marchal" (35B) 14 mm (R. VI).	4
DS 212-12	Spark plug lead, coil to No. 3 cylinder, 250 mm long.	1
DS 212-13	Spark plug lead, coil to No. 4 cylinder, 280 mm long.	1
D 212-14a	Ignition switch without lock barrel (R. VI).	1
DS 212-54	Terminal for spark plug lead, connection end (R. VI).	4
DS 212-70	Insulating sleeve for rod connecting sparking plug, 112 mm long. (R. VI).	4
DS 212-71	End piece upper, on rod connecting sparking plug (R. VI).	4
DS 212-72	*Rod, only connecting sparking plug 135 mm. long (threaded 4 diameter 75 pitch) (R. VI). Replaced by DS 212-72a; order in addition: 1-DS 212-22, 1-DS 212-70a.*	4
DS 212-82	Support bracket for coil assembled with 2 brackets.	1
D 212-96	Bracket for ignition switch.	1

NUMBER	DESCRIPTION	No. OFF
DS 212-110	Plug for sparking plug tube (R. VI).	4
DS 212-115	Blanking plug for box spanner hole in scuttle for 30 mm hole. Until February 1957.	1
DS 212-115a	Blanking plug for box spanner hole in scuttle for 40 mm hole. Since February 1957.	1
DS 212-116	Rubber cap for sparking plug tube 41 mm internal diameter.	4
DS 212-117	Rubber sealing washer 4 x 10 x 1 under screw securing bracket on scuttle.	2
D 861-13	*Set of 3 lock barrels for ignition switch and doors (R. VI). Until May 1956. No longer supplied.*	1
DS 861-13	Set of 4 lock barrels for ignition switch and doors (R. VI). Since May 1956.	1
62-S	Screw, round head 4 diameter 7.5 pitch securing condensers (R. III).	2
63-S	Screw, round head 4 diameter 10 long (R. VI) securing :	
	- contact breaker cover .	2
	- coil supports.	2
65-S	Screw, round head 4 diameter 15 long, securing ignition switch (R. III).	2
79-S	Screw, round head 4 diameter 12 long securing contact arm and upper terminal (R. VI).	1
80-S	Screw, round head 4 diameter 16 long securing contact arm and lower terminal (R.VI).	1
125-S	Screw, round head 5 diameter 15 long securing ignition switch bracket (R. III).	2

38-CONTACT BREAKER AND DUCELLIER COIL-IGNITION CIRCUIT-IGNITION CONTROL

NUMBER	DESCRIPTION	No. OFF
483-S	Screw, hex. head 7 diameter 15 long securing metal plate and lever (R. III).	2
2.236-S	Nut, hex. 4 diameter 75 pitch for screw securing condensers (R. VI).	2
2.269-S	Nut, hex. 4 diameter 75 pitch (R. III) for screws securing :	
	- coil supports on bracket.	2
	- ignition switch.	2
2.284-S	Washer, shakeproof 4.2 x 8 (R. VI) for screws securing :	
	- contact arms.	2
	- condensers.	4
	- contact breaker cover.	2
	- coil supports.	2

NUMBER	DESCRIPTION	No. OFF
2.319-S	Nut, hex. 5 diameter 75 pitch for screws securing coil bracket on scuttle (R. III).	1
2.334-S	Washer, shakeproof 5.2 x 9.4 for screws securing coil bracket (R. VI).	3
2.482-S	Washer, 7.5 x 14 for screws securing lever (R. III).	1
2.659	Screw, hex. head 5 diameter 13 long securing coil bracket on scuttle (R. III).	1

NUMBER	DESCRIPTION	No. OFF
89.149	Screw, hex. head 5 diameter 13 long securing coil bracket on scuttle (R. III).	2
89.591	Screw, square head, 4 diameter 8 long tightening cable (R. III).	1
453.173	Housing for contact breaker (R. III).	1
457.208	Screw, hex. head 5 diameter 7.5 long locking ignition control cable sheath (R. III).	1

40-CONTACT BREAKER AND COIL-IGNITION CIRCUIT-IGNITION CONTROL

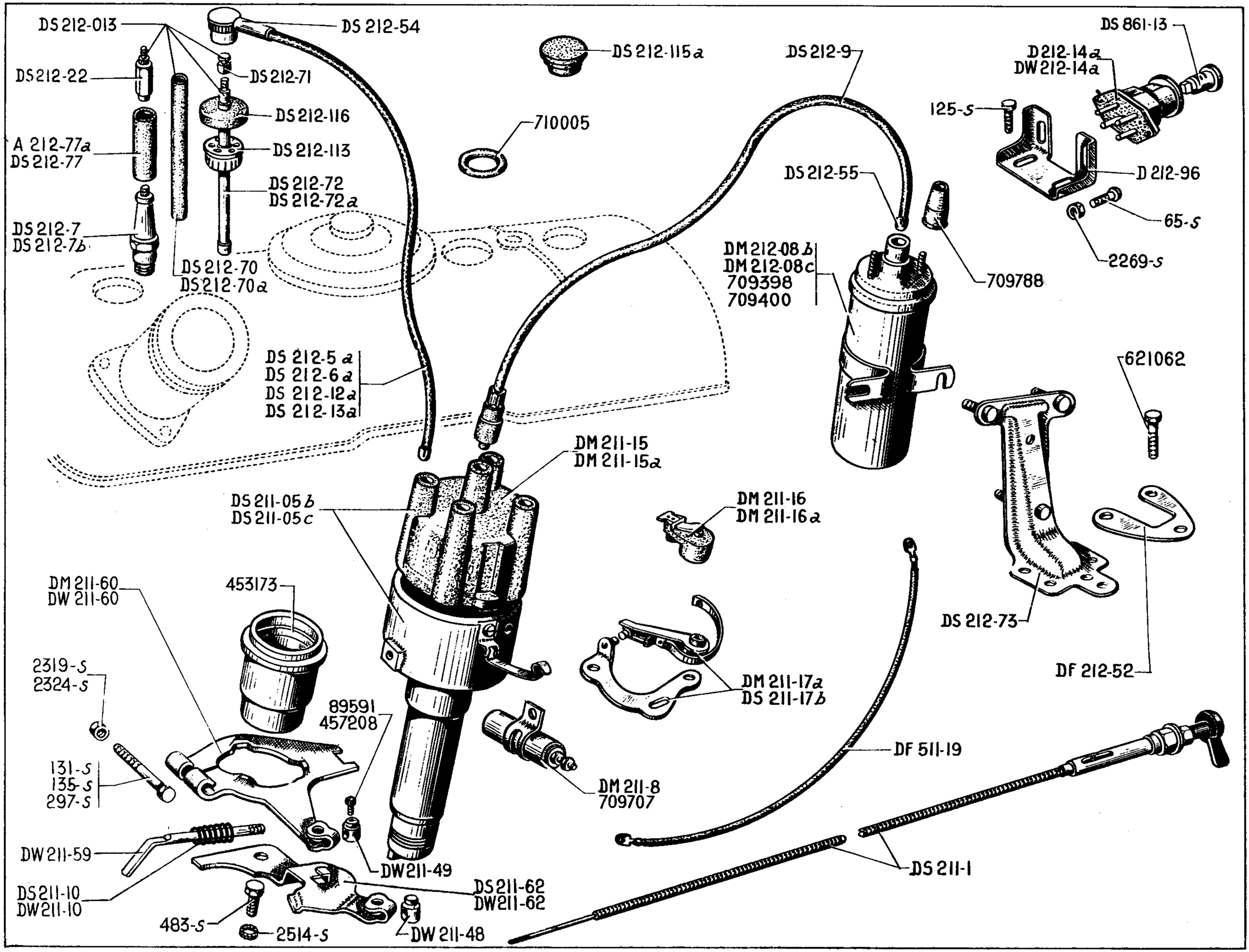

NUMBER	DESCRIPTION	No. OFF
	ASSEMBLY WITH INTEGRAL INLET MANIFOLD Since July 1959	
	DAMPER ASSEMBLY Since March 1961	
A 212-77a	Rubber protection sleeve, 6.5 x 15, spark plug end (R. VI). Until January 1960.	4
AZ 212-77	Protection sleeve for spark plug (R. VI). Since April 1962.	4
DS 211-05b	Distributor complete, "Ducellier" (R. VI).	1
DS 211-05c	Distributor complete, S.E.V. (R. VI). Except U.S.A. 12 volts.	1
DS 211-1	Ignition control, 495 mm long (R. VI). Until March 1961.	1
DM 211-8	Condenser, "Ducellier" (R. VI).	1
DS 211-10	Return spring for distributor external diameter 9 mm, length 70 mm. Until March 1961.	1
DW 211-10	Spring on rod for distributor adjustment, 8 mm diameter, length 27.6 mm (R. VI). Since March 1961.	1
DM 211-15	Distributor head, "Ducellier" (R. VI).	1
DM 211-15a	Distributor head, S.E.V. (R. VI). Except U.S.A. 12 volts.	1
DM 211-16	Rotor, "Ducellier" (R. VI).	1
DM 211-16a	Rotor, S.E.V. (R. VI). Except U.S.A. 12 volts.	1
DM 211-17a	Contact breaker with S.E.V. contacts (R. VI). Except U.S.A. 12 volts.	1
DS 211-17b	Contact breaker complete, "Ducellier" (R. VI).	1
DW 211-48	Trunnion for fixed point controlling ignition advance, hole tapped 5 diameter x 75 pitch (R. VI). Since March 1961.	1
DW 211-49	Trunnion for lever controlling distributor, plain hole 5.25 diameter (R. VI). Since March 1961.	1
DW 211-58	Washer, dished, 5.5 diameter, for distributor adjustment rod (R. VI). Since March 1961.	1
DW 211-59	Adjustment rod for distributor, threaded 5 diameter x 75 pitch (R. VI). Since March 1961.	1
DM 211-60	Distributor lever. Until March 1961.	1
DW 211-60	Distributor lever (R. VI). Since March 1961.	1
DS 211-62	Bracket with trunnion for holding distributor. Until March 1961.	1
DW 211-62	Bracket fixing distributor housing without trunnion (R. VI). Since March 1961.	1
DM 212-08b	Ignition coil, 12 volts, DUCELLIER (R. VI). PRESTIGE. ALL TYPES Except U.S.A. Since September 1960.	1
DM 212-08c	Ignition coil, 12 volts, S.E.V. (R. VI). U.S.A. and PRESTIGE. ALL TYPES. Since September 1960.	1
DS 212-013	*Connection for sparking plug complete (without sparking plug). No longer supplied. Since January 1960.*	4
DS 212-5a	Spark plug lead, distributor to No. 1 cylinder, 460 mm long. Until April 1962.	1
DS 212-5f	Spark plug lead, distributor to No. 1 cylinder, 510 mm long (R. VI). Since April 1962.	1
DS 212-6a	Spark plug lead, distributor to No. 2 cylinder, 400 mm long. Until April 1962.	1
DS 212-6f	Spark plug lead, distributor to No. 2 cylinder, 460 mm long (R. VI). Since April 1962.	1
DS 212-7	Spark plug "Marchal" (35 B) 14 mm (R. VI). Until April 1962.	4
DS 212-7b	Spark plug AC (44 F) (R. VI). Until April 1962.	4
DS 212-7d	Spark plug "Marchal" 14 mm, end piece threaded 4 diameter x 70 pitch (35 B) (R. VI). Since April 1962.	4
DS 212-9	Lead, distributor to coil, 405 mm long. Until April 1962.	1
DS 212-9e	Lead from distributor to coil, 405 mm long (R. VI). Since April 1962.	1
DS 212-12a	Lead, distributor to No. 3 cylinder, 290 mm long. Until April 1962.	1
DS 212-12f	Spark plug lead, distributor to No. 3 cylinder, 360 mm long (R. VI). Since April 1962.	1
DS 212-13a	Lead, distributor to No. 4 cylinder, 290 mm long. Until April 1962.	1
DS 212-13f	Spark plug lead, distributor to No. 4 cylinder, 360 mm long (R. VI). Since April 1962.	1
D 212-14a	Ignition switch without lock barrel (R. VI). Until August 1961.	1
DW 212-14a	Ignition switch without lock barrel (R. VI). Since August 1961.	1
DS 212-22	Suppressor end piece for spark plug (R. VI). Since January 1960.	4
DF 212-52	Reinforcement plate for coil bracket.	1
DS 212-54	Terminal for spark plug lead (R. VI). Until April 1962.	4
DS 212-55	Terminal for spark plug lead (R. VI). January 1960 - April 1962.	5

The numbers underlined indicate new parts and do not appear on the illustrations.

NUMBER	DESCRIPTION	No. OFF
DS 212-70	Insulating sleeve for rod connecting sparking plug, 112 mm long (R. VI). Until January 1960.	4
DS 212-70a	Insulating sleeve for rod connecting sparking plug, 84 mm long (R. VI). January 1960 - April 1962.	4
DS 212-70b	Sheath, 4.5 x 7 x 57, insulating spark plug connecting rod (R. VI).	4
DS 212-71	End piece, upper, on rod connecting sparking plug (R. VI). Until April 1962.	4
DS 212-71a	End piece for spark plug connecting rod, threaded 4 diameter x 70 pitch (R. VI). Since April 1962.	4
DS 212-72	*Rod, only connecting sparking plug 135 mm. long (threaded 4 diameter 75 pitch) (R. VI). Until January 1960. Replaced by DS 212-72a; order in addition: 1-DS 212-22, 1-DS 212-70a.*	4
DS 212-72a	Rod, only connecting sparking plug 110 mm long (threaded 4 diameter x 75 pitch). January 1960 - April 1962.	4
DS 212-72b	Connecting rod for spark plug, 82 mm long, threaded 4 diameter x 70 pitch (R. VI). Since April 1962.	4
DS 212-73	Bracket for coil. Until April 1962.	1
DS 212-73a	Support for coil. April 1962 - September 1962.	
DS 212-73b	Support for coil with angle plate. Since September 1962.	1
DS 212-77	Protector, 9 x 12 x 70, for rod connecting sparking plug (R. VI). January 1960 - April 1962.	4

NUMBER	DESCRIPTION	No. OFF
DS 212-79	Protection sleeve, 6.2 x 7.2 x 39, for connecting rod and plug lead (R. VI). Since April 1962.	4
D 212-96	Bracket for ignition switch. Until August 1961.	1
DS 212-113	Plug for spark plug tube (R. VI). Until April 1962.	4
DS 212-113a	Plug for spark plug tube (R. VI). Since April 1962.	4
DS 212-115a	Spark plug for box spanner hole in scuttle for 40 mm hole.	1
DS 212-116	Rubber cap for spark plug tube, internal diameter 41 mm. Until April 1962.	4
DF 511-19	Lead, coil to switch, 450 mm long.	1
DS 861-13	Set of 4 lock barrels (5 wards) for ignition switch and doors (R. VI).	1
65-S	Screw, round head, 4 diameter x 15 long, securing ignition switch (R. III).	2
125-S	Screw, round head, 5 diameter x 15 long, securing bracket for switch (R. III).	2
131-S	Screw, round head, 5 diameter x 30 long, tightening distributor lever (R. III). Until June 1960.	1
135-S	Screw, round head, 5 diameter x 40 long, tightening distributor lever (R. III). Since March 1961.	1
297-S	Screw, hex. head, slotted, 5 diameter x 35 long, tightening distributor lever (R. III). June 1960 - March 1961.	1
483-S	Screw, hex. head, 7 diameter x 15 long, securing metal plate and lever (R. III).	2

NUMBER	DESCRIPTION	No. OFF
2.269-S	Nut, hex., 4 diameter x 75 pitch, for screws securing ignition switch (R. III).	2
2.319-S	Nut, hex., 5 diameter x 75 pitch, for screws tightening distributor lever (R. III). Until June 1960.	1
2.324-S	Nut, square, 5 diameter x 75 pitch, for screw tightening distributor clip (R. III). Since June 1960.	1
2.514-S	Washer, shakeproof, 7.3 x 12, for screw securing metal plate and lever (R. VI).	1
89.591	Screw, square head, 4 diameter x 8 long, securing cable (R. III).	1
453.173	Housing for distributor (R. III).	1
457.208	Screw, hex. head, slotted, 5 diameter x 7.5 long, locking ignition control cable sheath (R. III).	1
621.062	Screw, hex. head, 5 diameter x 14 long, securing coil bracket (R. III).	2
709.398	Ignition coil, S.E.V. 6 volts (R. VI). Until September 1960.	1
709.400	Ignition coil "Ducellier", 6 volts, (R. VI). Until September 1960.	1
709.707	Condenser S.E.V. (R. VI).	1
709.788	Rubber protector, coil end (R. VI). Until April 1962.	1
710.005	Rubber ring retaining spark plug leads (R. III).	1
	MARCHAL SUPPRESSORS	
DS 212-014	*Pouch (R. VI). No longer supplied.*	1

The numbers underlined indicate new parts and do not appear on the illustrations.

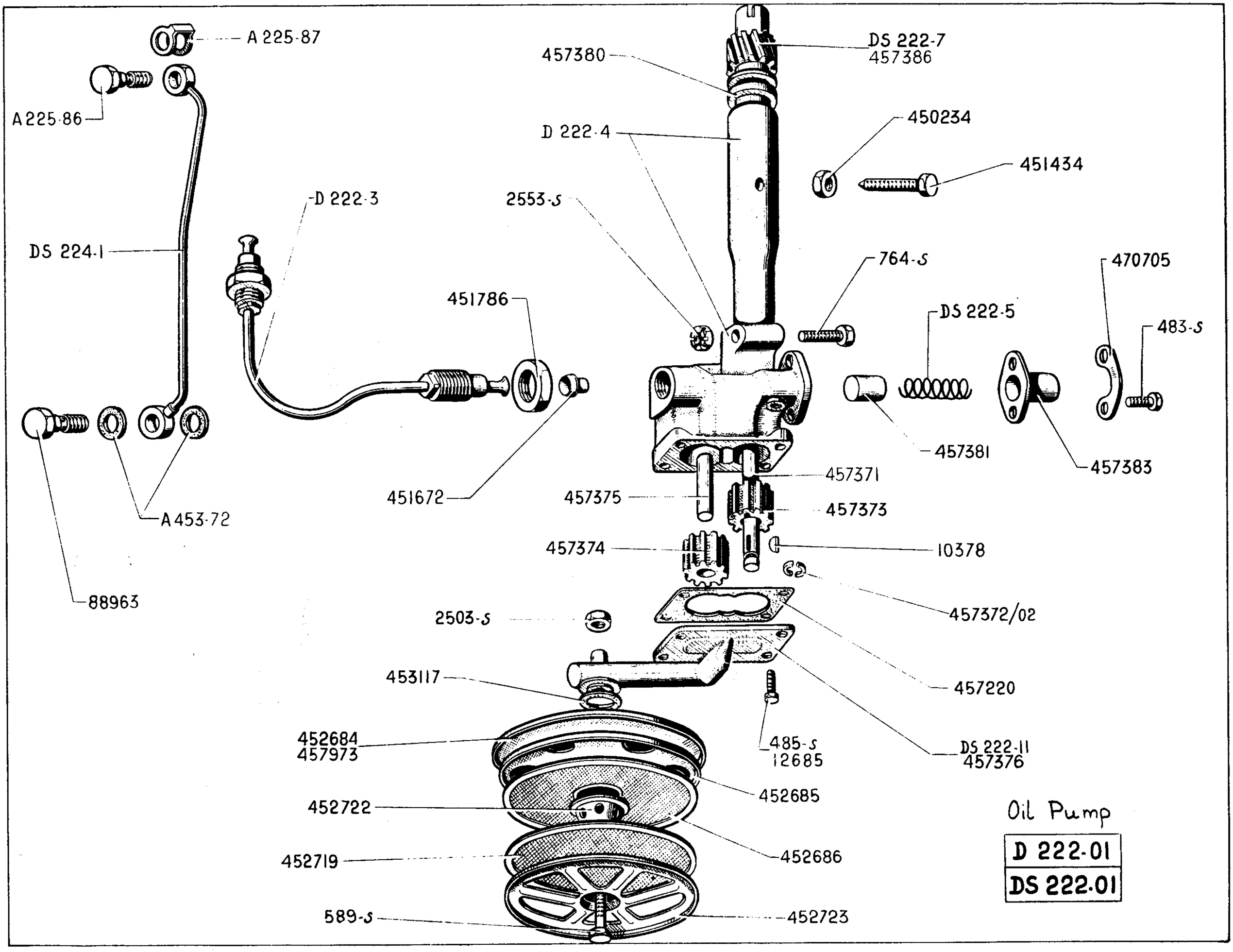
A 225-87
A 225-86
DS 224-1
D 222-3
451786
A 453-72
88963
451672
457380
D 222-4
2553-S
DS 222-7
457386
450234
451434
764-S
DS 222-5
470705
483-S
457381
457383
457371
457375
457373
457374
10378
457372/02
2503-S
457220
453117
452684
457973
485-S
12685
DS 222-11
457376
452685
452722
452686
452719
589-S
452723
Oil Pump
D 222-01
DS 222-01

NUMBER	DESCRIPTION	No. OFF
A 225-86	Union screw, hex. 7 diameter 18 long (hole 1 mm. diameter) securing lubrication pipe for valve rockers to cylinder head.	1
A 225-87	Joint, double 7.2 mm. for screw securing lubrication pipe to cylinder head (R.VI).	1
A 453-72	Joint, copper 10.2 x 18 for rocker-shaft lubrication pipes.	2
D 222-01	Oil pump complete with filters (pinion height 45.2) Since July 1959.	1
DS 222-01	Oil pump complete with filters (pinion height 34.5) Until July 1959.	1
D 222-3	Oil pipe between pump and cylinder head.	1
D 222-4	Body for oil pump with bracket.	1
DS 222-5	Spring for non-return valve.	1
DS 222-7	Pinion driving pump and distributor (total height 34.5 mm). Until July 1959.	1
DS 222-11	Base for oil pump forming support for filters (4 cylindrical holes). Since June 1960.	1
DS 224-1	Oil pipe for valve rockers 190 mm. between centres.	1
483-S	Screw, hex. head 7 diameter 15 long securing housing for piston spring (R.III).	2
485-S	Screw, hex. head 7 diameter 20 long securing base on pump body (R.III).	
	Until June 1960	3
	Since June 1960	4
589-S	Screw, hex. head 7 diameter 60 long securing filters on pump (R.III).	1
764-S	Screw, hex. head 8 diameter 42.5 long tightening support tube on pump body (R.III).	1

NUMBER	DESCRIPTION	No. OFF
2.503-S	Nut, hex. 7 diameter 100 pitch (height 6 mm.) securing filters on pump base (R.III).	1
2.553-S	Nut, hex. castellated 8 diameter 125 pitch for screw securing pump support tube (R.III).	1
10.378	Woodruff key for fixed pinion (2.5 mm. thick) (R.I).	1
12.685	Screw, raised head, 7 diameter 15 long securing base on pump body (R.I). Until June 1960.	1
88.963	Union screw, hex. head 10 diameter 18 long securing valve rocker oil pipe on cylinder block (R.I).	1
450.234	Locknut, hex. 10 diameter 100 pitch (height 4 mm.) for screw 451.434 securing pump support tube (R.I).	1
451.672	Conical union for oil pipe on pump and cylinder block (R.I).	2
451.786	Locknut, hex. 20 diameter 150 pitch securing pipe between pump and cylinder block (R.I).	2
452.684	Housing, upper for filters (R.I). Until June 1960.	1
452.685	Cover, upper for pump filters (6 holes 30 mm.) (R.I).	1
452.686	Filter, upper for pump (30 mm. diameter grommet) (R.I).	1
452.719	Filter, lower for pump (11 mm. diameter grommet) (R.I).	1

NUMBER	DESCRIPTION	No. OFF
452.722	Distance piece for filters (R.I).	1
452.723	Lower plate for filters (6 triangular holes) (R.I).	1
453.117	Joint 29 x 42 between pump base and upper protection shield (R.VI).	1
457.220	Joint for pump base 0.05 mm. thick (R.VI).	1
457.371	Spindle for fixed pinion (288.5 mm. long).	1
457.372/02	Retaining cotters for fixed pinion, height 7 mm. (2 parts) (R.I).	1
457.373	Fixed pinion, straight teeth (10 teeth 24.9 mm. high) (R.I).	1
457.374	Idler pinion, straight teeth (10 teeth 24.9 mm. high) (R.I).	1
457.375	Spindle for idler pinion, 44 mm. long (R.I).	1
457.376	*Base for oil pump forming support for filters (3 cylindrical holes 1 hole drilled) (R. I). Until June 1960. Replaced by DS 222-11, order in addition: 1-485-S (R. III), 1-457.973 (R. I).*	1
457.380	Bush for support tube 12.5 x 24 x 28 x 37 (R.I).	1
457.381	Piston for return valve 12 mm. diameter 20 mm. (R.I).	1
457.383	Housing for piston spring (R.I).	1
457.386	Pinion driving pump and distributor (total height 45.2 mm.) (R.I). Since July 1959.	1
457.973	Housing, upper for filters (4 guide grooves) (R.I). Since June 1960.	1
470.705	Lockwasher, double 7.5 mm. holes 32 mm. between centres (R.I).	1

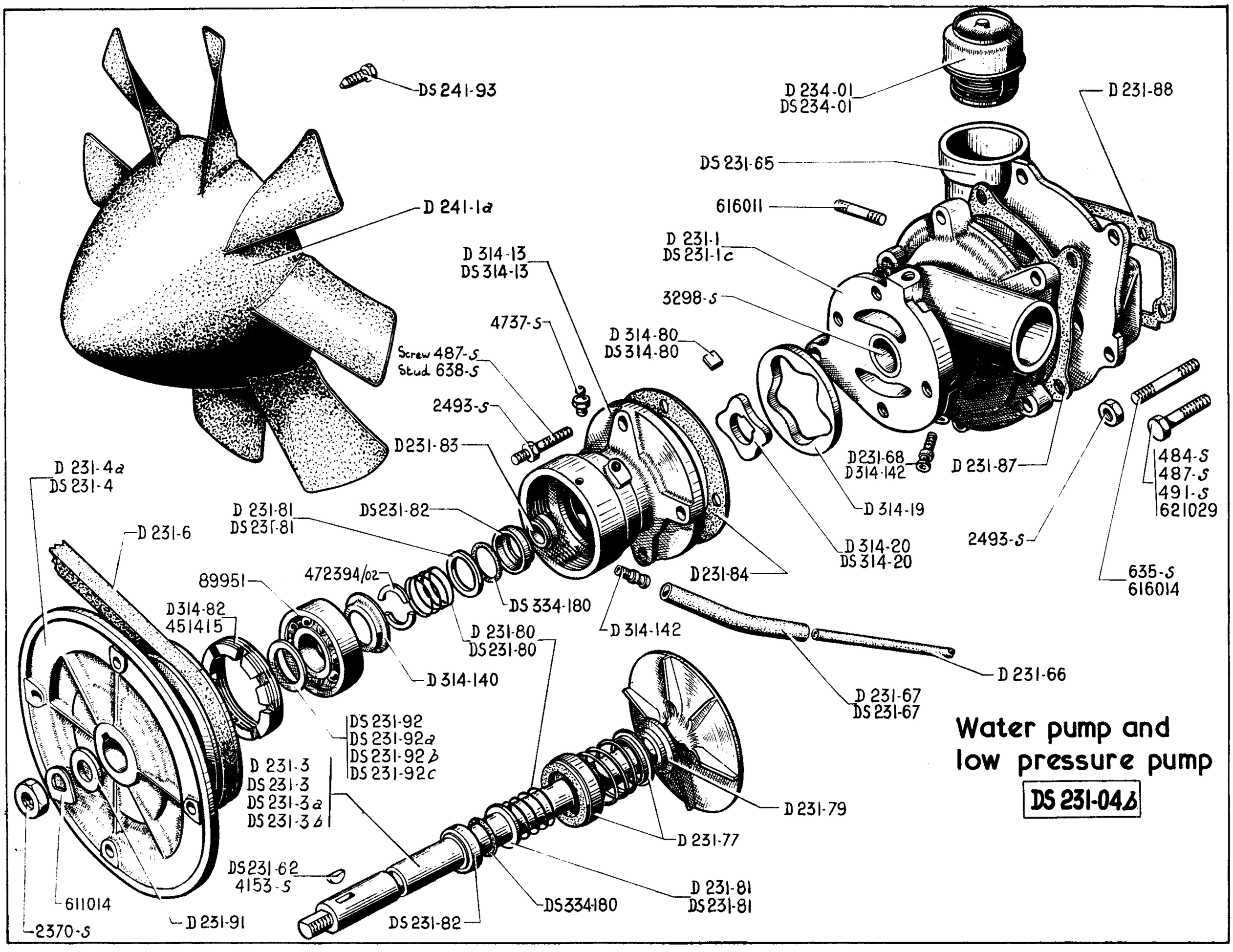

Water pump and low pressure pump

DS 231-04b

NUMBER	DESCRIPTION	No. OFF
	Until September 1960	
DS 231-04b	Water and low pressure pump complete with overflow return pipe, nut and key for pulley but without pulley, cover or thermostat (assembly with impeller marked DS 231-7). Since July 1957. Replaces type with impeller marked D 231-7 fitted until July 1957 by ordering in addition; 1 - DS 231-65, 2 - 616.011 (R.I). - 1 - 616.014 (R.I).	1
D 231-1	*Body for water pump, bushed (tapped for overflow union, 5 diameter × 75 pitch). Until February 1958. Replaced by DS 231-1d; order in addition: 1-D 231-66, 2-DS 231-67, 1-D 314-142.*	1
DS 231-1c	Body for water pump, bushed, (tapped for overflow union 7 diameter 100 pitch) Since February 1958.	1
	Spindle for water and low pressure pump with impeller fitted.	
D 231-3	*- with impeller marked D 231-7, Woodruff keys. Until July 1957. Replaced by:* DS *231-3a: order in addition: 1-DS 231-65, 1-DS 314-20, 1-DS 314-80 (R. VI), 2-616.011 (R. I).*	1
DS 231-3	*- with impeller marked DS 231-7, Woodruff keys. July 1957 - February 1958. Replaced by DS 231-3a; order in addition: 1-DS 314-20, 1-DS 314-80 (R. VI).*	1
DS 231-3a	- with impeller marked DS 231-7, Woodruff keys for pulley, rectangular for low pressure pump pinion. Since April 1958.	1
DS 231-3b	*- with impeller marked DS 231-7, Woodruff keys. February 1958 - April 1958. Replaced by DS 231-3a; order in addition: 1-4.153-S (R. VI).*	1
DS 231-4a	Pulley with double groove for pump and fan (total thickness 47 mm.) Until July 1956.	1
DS 231-4	Pulley with double groove for pump and fan (total thickness 41.5 mm) Since July 1956.	1
D 231-6	Belt driving water pump and dynamo (R.VI).	2
DS 231-62	Key, rectangular 4 x 4 x 14.5 for pump pulley (R.VI). February 1958 - April 1958.	1
DS 231-65	Cover, only, for water pump, 2 tappings 5 dia. securing heater pipe.	1
D 231-66	Nylon overflow pipe for pump (7 x 8 x 6.20) (R.VI).	
	Until February 1958.	1
	Since February 1958.	2
D 231-67	Rubber overflow pipe for pump (6.5 x 9.5 x 105), lateral hole 3 mm diameter). Until February 1958.	1
DS 231-67	Rubber overflow pipe for water and low pressure pump (6.5 x 9.5 x 105 without lateral hole). Since February 1958.	2
D 231-68	Union on water pump (2.5 x 5 x 27 threaded 5 diameter 75 pitch). Until February 1958.	1
D 231-77	Seal for water pump (22 x 42 x 12) (R.VI).	1
D 231-79	Washer 22 x 30 x 2 for sealing gland of water pump.	1
D 231-80	Compression spring for ring seal of water and low pressure pump (15.8 x 19.2 x 4 coils). Until November 1957.	2
DS 231-80	Compression spring for ring seal of water and low pressure pump (15.1 x 18.5 x 4 coils, with locking tongue). Since November 1957.	2
D 231-81	Washer 15 x 23.5 x 2 for compression spring for ring seal of water and low pressure pump. Until November 1957.	2
DS 231-81	Washer, 15 x 20.4 x 1 for ring seal compression spring. Since November 1957.	2
DS 231-82	Cage for ring seal for water and low pressure pump (15 x 19.6 x 20.6 x 23.5 x 8.5). Replaces earlier type.	2
D 231-83	Friction washer, shouldered, 15.5 x 20 x 23.5 x 5 for water and low pressure pump.	2
D 231-84	Joint between water pump and low pressure pump (R. VI).	1
D 231-87	Joint between water pump and cover (R. VI).	1
D 231-88	Joint between cover of water pump and cylinder head (R. VI).	1
D 231-91	Washer, 9 x 28 x 4 under nut securing pump pulley and fan.	1

NUMBER	DESCRIPTION	No. OFF
	Washer for adjusting ball bearing on pumpshaft 15 x 24.2.	As nec.
DS 231-92	1 mm. thick.	
DS 231-92a	1.5 mm. thick.	
DS 231-92b	2 mm. thick.	
DS 231-92c	0.5 mm. thick.	
D 234-01	Thermostat (R.VI). All types except cold climates.	1
DS 234-01	Thermostat (R.VI). Cold Climates.	1
D 241-1a	Fan, nylon 8 blades.	1
DS 241-93	Screw, hex. head 7 diameter 28 long (head 10 across flats) securing fan (R.VI). Replaces type with head 12 across flats.	4
D 314-13	*Body for low pressure pump (with hole for greaser). Until December 1957. Replaced by DS 314-13; order in addition: 1-451.415 (R. I.).*	1
DS 314-13	Body for low pressure pump (without hole for greaser) Since December 1957.	1
D 314-19	Wheel for low pressure pump (5 teeth).	1
D 314-20	*Pinion for low pressure pump (4 teeth, width of keyways 3 mm.). Until February 1958. Replaced by DS 314-20; order in addition: 1-DS 231-3a, 1-DS 314-80 (R. VI).*	1
DS 314-20	Pinion for low pressure pump (4 teeth, groove for key 10 mm. wide) Since February 1958.	1

NUMBER	DESCRIPTION	No. OFF
D 314-80	Key 3 x 6.5 x 4.8 securing low pressure pump pinion. Until February 1958.	1
DS 314-80	Key, rectangular 1.9 x 7.2 x 10 securing low pressure pump pinion (R.VI). Since February 1958.	1
D 314-82	Ring nut, external thread 45 diameter 150 pitch, locking ball bearing on pump spindle. Until December 1957.	1
D 314-140	Retainer for circlip locking bearing (15.2 x 21 x 27 x 6).	1
D 314-142	Union for drain tube (4 x 7 x 21 threaded 7 diameter 100 pitch):	
	- on low pressure pump	1
	- on water pump	1
	Since February 1958.	
DS 334-180	Ring seal 13.6 x 19 x 2.7 for water and low pressure pump (R.VI).	2
484-S	Screw hex. head 7 diameter 17.5 long securing water pump (R.III). Until October 1957.	1
487-S	Screw hex. head 7 diameter 25 long (R.III).	
	- securing water pump	1
	- assembling body of water and low pressure pump.	
	Until February 1960.	4
	Since February 1960.	3
491-S	Screw hex. head 7 diameter 35 long securing water pump (R.III).	4
635-S	Stud, 7 diameter 30.5 long (threaded 17 and 10.5) securing water pump (R. III).	1
638-S	Stud, 7 diameter 38.5 long (threaded 17 and 10.5), assembling body of water and low pressure pump. Since February 1960.	1

NUMBER	DESCRIPTION	No. OFF
2.370-S	Nut, hex. 9 diameter 125 pitch, securing pulley for pump and fan (R.III).	1
2.493-S	Nut, hex. 7 diameter 100 pitch (R.III).	
	- securing pump on cover	
	Until October 1957	2
	Since October 1957	3
	- assembling water and low pressure pump	1
	Since February 1960.	
3.298-S	Bush 15 x 19 x 20 for body of water pump (R.VI).	1
4.153-S	Woodruff key 4 x 5 x 13 securing pump and fan pulley (R.VI). Until February 1958. Since April 1958.	1
4.737-S	Greaser, straight for water pump ball bearing (R.VI). Up to December 1957.	1
89.951	Ball bearing 15 x 42 x 13 for pump spindle (R.VI).	1
451.415	Castellated nut (external thread 45 diameter 150 pitch locking pump shaft bearing (R.I). Since December 1957.	1
472.394/02	Locking ring for ball bearing, height 9.4 mm. (2 parts) (R.I).	1
611.014	Lockwasher, single 9.5 mm. for nut securing pump pulley and fan (R.I).	1
616.011	Stud 5 diameter 20 long (threaded 8 and 8) securing hot water outlet pipe on water pump cover (R.I.)	2
616.014	Stud 7 diameter 35.5 (threaded 10.5 and 21) securing water pump (R.I).	
	Until October 1957	1
	Since October 1957	2
621.029	Screw, hex. head 10 diameter 60 long securing water pump cover on cylinder head (R.I).	2

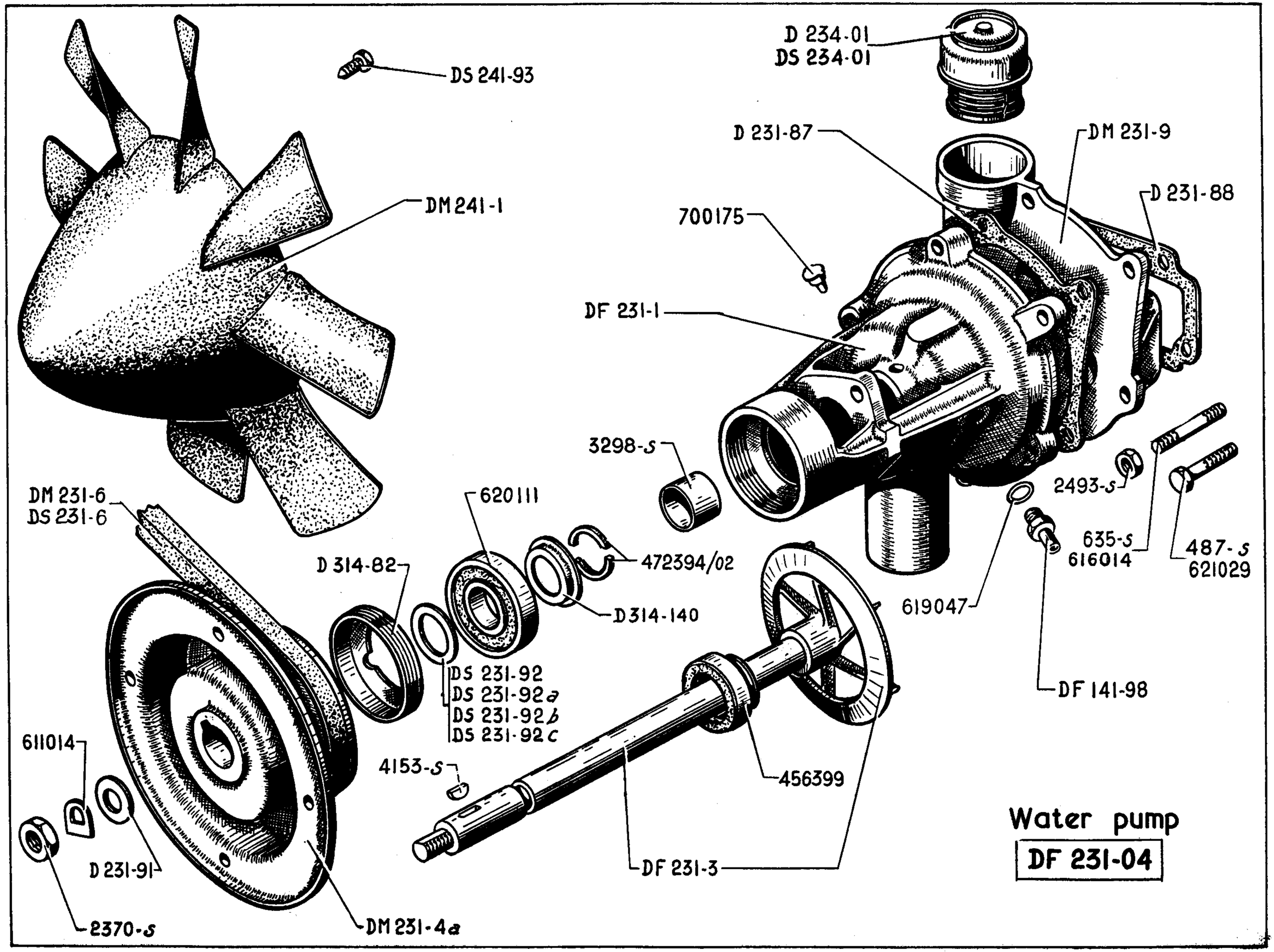
DS 241-93
DM 241-1
D 234-01
DS 234-01
D 231-87
DM 231-9
D 231-88
700175
DF 231-1
3298-S
2493-S
635-S
616014
487-S
621029
619047
DF 141-98
DM 231-6
DS 231-6
620111
D 314-82
472394/02
D 314-140
DS 231-92
DS 231-92a
DS 231-92b
DS 231-92c
4153-S
456399
611014
D 231-91
2370-S
DM 231-4a
DF 231-3
Water pump
DF 231-04

NUMBER	DESCRIPTION	No. OFF
	Since September 1960	
DF 141-98	Union for water outlet (threaded 20 diameter 150 pitch, outside diameter 19 mm).	1
DF 231-04	Water pump complete without pulley cover or thermostat (body with hole threaded 20 diameter 150 pitch).	1
DF 231-1	Body for water pump, bushed (hole tapped 20 diameter 150 pitch for water outlet union).	1
DF 231-3	Spindle for water pump with impeller fitted (impeller 22.5 mm. long).	1
DM 231-4a	Pulley for pump and fan.	1
DM 231-6	Belt driving water pump and dynamo (R.VI). Until October 1961.	1
DS 231-6	Belt driving water pump and dynamo (R.VI). Since October 1961.	1
DS 231-65a	Cover, only for water pump (2 tapped holes 7 diameter 100 pitch securing heater pipe).	1
D 231-87	Joint between water pump and cover (R.VI).	1
D 231-88	Joint between water pump cover and cylinder head (R.VI).	1
D 231-91	Washer 9 x 28 x 4 under nut securing pulley for pump and fan.	1

NUMBER	DESCRIPTION	No. OFF
	Washer for adjustment of pump spindle ball bearing 15.5 x 24.2	As nec.
DS 231-92	1 mm. thick	
DS 231-92a	1.5 mm. thick	
DS 231-92b	2 mm. thick	
DS 231-92c	0.5 mm. thick	
D 234-01	Thermostat (R.VI). All types except cold climates.	1
DS 234-01	Thermostat (R.VI). Cold Climates.	1
DM 241-1	Fan, nylon, 8 blades (with bosses protruding 0.5 mm. on bearing face).	1
DS 241-93	Screw, hex. head 7 diameter 28 long (head 10 across flats) securing fan (R.VI).	4
D 314-82	Ring nut (external thread 45 diameter 150 pitch) locking ball bearing on pump spindle.	1
D 314-140	Cup retaining locking circlip (15.2 x 21 x 27 x 6).	1
487-S	Screw, hex. head 7 diameter 25 long securing water pump (R.III).	2
635-S	Stud, 7 diameter 30.5 long (threaded 17 and 10.5) securing water pump on cover (R.III).	1
2370-S	Nut, hex. 9 diameter 125 pitch securing pulley for pump and fan (R.III).	1

NUMBER	DESCRIPTION	No. OFF
2.493-S	Nut, hex. 7 diameter 100 pitch securing water pump (R.III).	2
2.613-S	Nut, hex. 10 diameter 150 pitch securing water pump body on cylinder head.	1
3.298-S	Bush 15 x 19 x 20 for water pump body (R.VI).	1
4.153-S	Woodruff key 4 x 5 x 13 securing pulley for pump and fan (R.VI).	1
456.399	Sealing washer, internal diameter 15 mm. external diameter: 35 mm. (R.VI).	1
472.394/02	Locking ring for ball bearing, high 9.4 mm. (2 parts) (R.I).	1
611.014	Lockwasher, single 9.5 mm. for nut securing pulley for pump and fan (R.I). Until September 1961.	1
616.014	Stud, 7 diameter 35.5 long securing water pump on cover.	2
619.047	Joint for water outlet union 20.5 x 26 x 1.5 to 2 (R.VI).	1
620.111	Ball bearing 15 x 42 x 13 double seal (R.VI).	1
621.029	Screw, hex. head 10 diameter 60 long securing cover for water pump on cylinder head (R.I).	2
700.175	Oiler for pump body sleeve (R.VI).	1

52-WATER DISTRIBUTION-FAN COWL

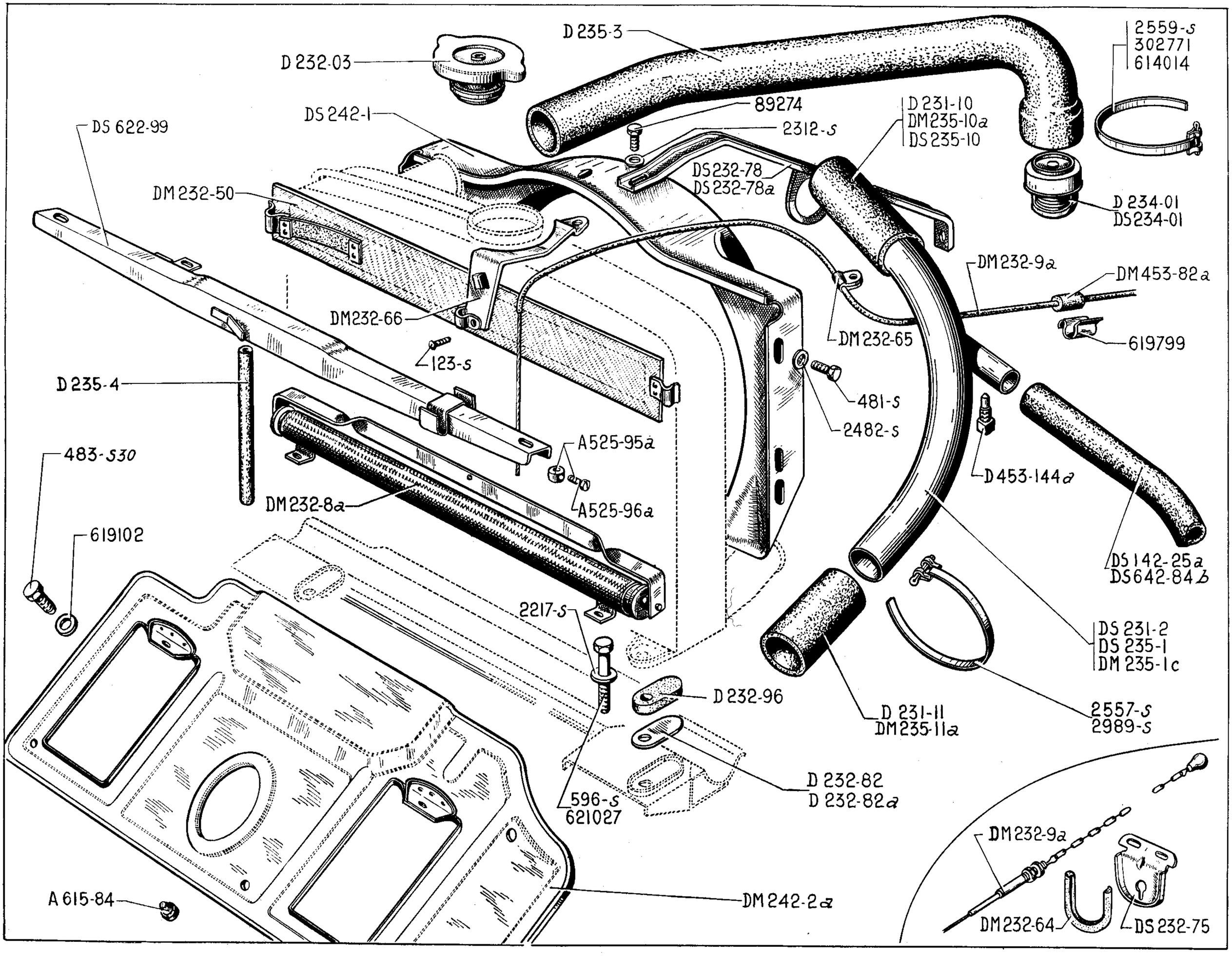

NUMBER	DESCRIPTION	No. OFF
A 615-84	Rubber buffer on deflector. Since April 1958.	3
DS 142-25a	Rubber tube 20 x 28 x 280 for heating carburettor. Until September 1960.	1
DS 231-2	Feed pipe between radiator and water pump with connecting tubes. Until September 1960.	1
D 231-10	Pipe between feed pipe and water pump 40 x 50 x 80. Until September 1960.	1
D 231-11	Pipe between feed pipe and radiator 40 x 50 x 220. Until September 1960.	1
D 232-03	Cap AC (RC2) for radiator (R.VI).	1
DS 232-78	*Stay with attachment plate securing radiator. Until September 1960. Replaced by DS 232-78a.*	1
DS 232-78a	Stay with attachment plate securing radiator. Since September 1960.	1
D 232-82	Packing for radiator 1 mm. thick.	As nec.
D 232-82a	Packing for radiator 2 mm. thick.	As nec.
D 232-96	Rubber pad 60 x 35 x 16 under radiator bracket.	2
D 234-01	Thermostat regulating water circulation on pump (R.VI).	1
DS 235-1	Feed pipe between radiator and water pump with union pipe. September 1960 - November 1961.	1 1
DM 235-1c	Feed pipe between radiator and water pump with union pipe. Since November 1961.	1
D 235-3	Connecting pipe, upper with elbow between water pump and radiator.	1
D 235-4	Pipe, rubber 6 x 9 x 300 for radiator overflow.	1
DS 235-10	Pipe between feed pipe and water pump. Since November 1961.	1

NUMBER	DESCRIPTION	No. OFF
DM 235-10a	Pipe between feed pipe and water pump. September 1960 - November 1961.	1
DM 235-11a	Pipe between feed pipe and radiator (length of elbows 20 x 30). Since September 1960.	1
DS 242-1	Fan cowl on radiator (R. VI).	1
DM 242-2a	Air deflector. Until September 1962.	1
D 453-144a	Screw, square head, 5 diameter x 17 long, in feed pipe for draining radiator. Since September 1956.	1
DS 622-97c	Support for spare wheel. Since September 1962.	1
DS 622-99	Spare wheel support with clips for starting handle and extension. Until September 1962.	1
DS 642-84b	Rubber tube with elbow bend, 19.5 x 26, for water return connection for left-hand radiator towards pump, non-developed length 360 mm.	1
481-S	Screw, hex. head, 7 diameter x 10 long, securing fan cowl on radiator (R. III).	4
483-S 30	Screw, hex. head pointed, 7 diameter x 15 long, securing air deflector (R. III).	4
596-S	Screw, hex. head, 9 diameter x 42 long, securing radiator on support (R. III).	2
2.217-S	Washer, 9.5 x 16 x 2, for screws securing rubber pads under radiator (R. III).	2
2.312-S	Washer, 5.5 x 12, for screws securing radiator tie-rod (R.III).	1
2.482-S	Washer, 7.5 x 14, for screws securing fan cowl (R. III).	4
2.557-S	Clip for connections on feed pipe 366 mm long (R. VI).	4
2.559-S	Clip for upper connecting tube on thermostat, 485 mm long (R. VI).	1

NUMBER	DESCRIPTION	No. OFF
2.989-S	Clip for flexible pipe heating carburettor 245 mm. long (R.VI). Until September 1960.	2
89.274	Screw, hex. head 5 diameter 13 long securing radiator tie-rod (R.III).	1
302.771	Clip for upper water pipe connection (R.VI).	1
614.014	Clip with tightening screw for upper connection on water pump cover (R.VI).	1
619.102	Washer 8 x 25 x 1 for screws securing air deflector on front crossmember (R.III).	1
621.027	Screw, hex. head 9 diameter 50 pitch securing radiator on support (R.III).	1
	ASSEMBLY WITH HEATING BLIND Cold Climates	
	EUROPE AND U.S.A. January 1961 - September 1962	
A 525-95a	Trunnion for blind control cable (R.VI).	2
A 525-96a	Screw, cylindrical head for trunnion (R.VI).	2
DM 232-8a	Blind for radiator (R.VI).	1
DM 232-9a	Control for blind (R.VI).	1
DM 232-50	Shield for radiator.	1
DM 232-64	Rubber protector for support locking chain (R.VI).	1
DM 232-65	Clip retaining sheath on battery support (R.VI).	1
DM 232-66	Support for sheath on radiator.	1
DS 232-75	Support locking chain (R. VI).	1
DS 234-01	Thermostat regulating water circulation (R.VI).	1
DM 453-82a	Protection sleeve on cable guide (R.VI).	1
123-S	Screw, round head 5 diameter 10 long securing sheath on support (R.III).	1
619.799	Clip securing blind cable (R.VI).	2

The numbers underlined indicate new parts and do not appear on the illustrations.

NUMBER	DESCRIPTION	No. OFF
	SPECIAL PARTS Since September 1962 Except cold climates	
DS 242-49	**Frame with flexible duct for radiator ventilation.**	1
DS 242-50	Casing (rigid part) for ventilation duct	1
615.725	Nut, 5 diameter 75 pitch (in cage) for tightening screws securing ventilation duct (R.VI).	4
DS 242-55	Joint, rubber sealing casing for ventilation duct on panel (R.VI).	1
DS 251-75	Closure plug (plastic) for handle opening (R.VI).	1
619.122	Washer, plain 5.5 x 12 x 1 for screws securing ventilation duct (R.III).	4
621.062	Screw, hex. head 5 diameter 14 long securing ventilation duct (R.III).	4

NUMBER	DESCRIPTION	No. OFF
	Cold Climates	
	EUROPE AND U.S.A.	
619.799	Clip securing shutter cable (R.VI).	1
DM 453-82a	Protection sleeve on cable guide (R.VI).	1
DS 242-49	**Frame with flexible duct for radiator ventilation.**	1
DS 242-45	Casing (rigid part) for ventilation duct with shutter	1
DS 242-46	Control for shutter (R.VI).	1
615.725	Nut, 5 diameter 75 pitch (in cage) for tightening screws securing ventilation duct (R.VI).	4
DS 242-55	Joint, rubber, sealing casing for ventilation duct on panel (R.VI).	1

NUMBER	DESCRIPTION	No. OFF
DS 251-75	Closure plug (plastic) for handle opening (R.VI).	1
DS 242-87	Plate retaining sheath on battery support (R.VI).	1
DS 242-108	Protector, rubber for support for chain lock (R.VI).	1
DS 234-01	Thermostat for water circulation (R.VI).	1
DM 644-102	Return spring for shutter	2
2.431-S	Rivet, bifurcated, 4.8 x 14.5 securing cable on shutter (R.VI).	1
619.122	Washer, plain 5.5 x 12 x 1 for screws securing ventilation duct (R.III).	4
DS 242-109	Support for chain lock (R.VI).	1
621.062	Screw, hex. head 5 diameter 14 long securing ventilation duct (R.III).	4

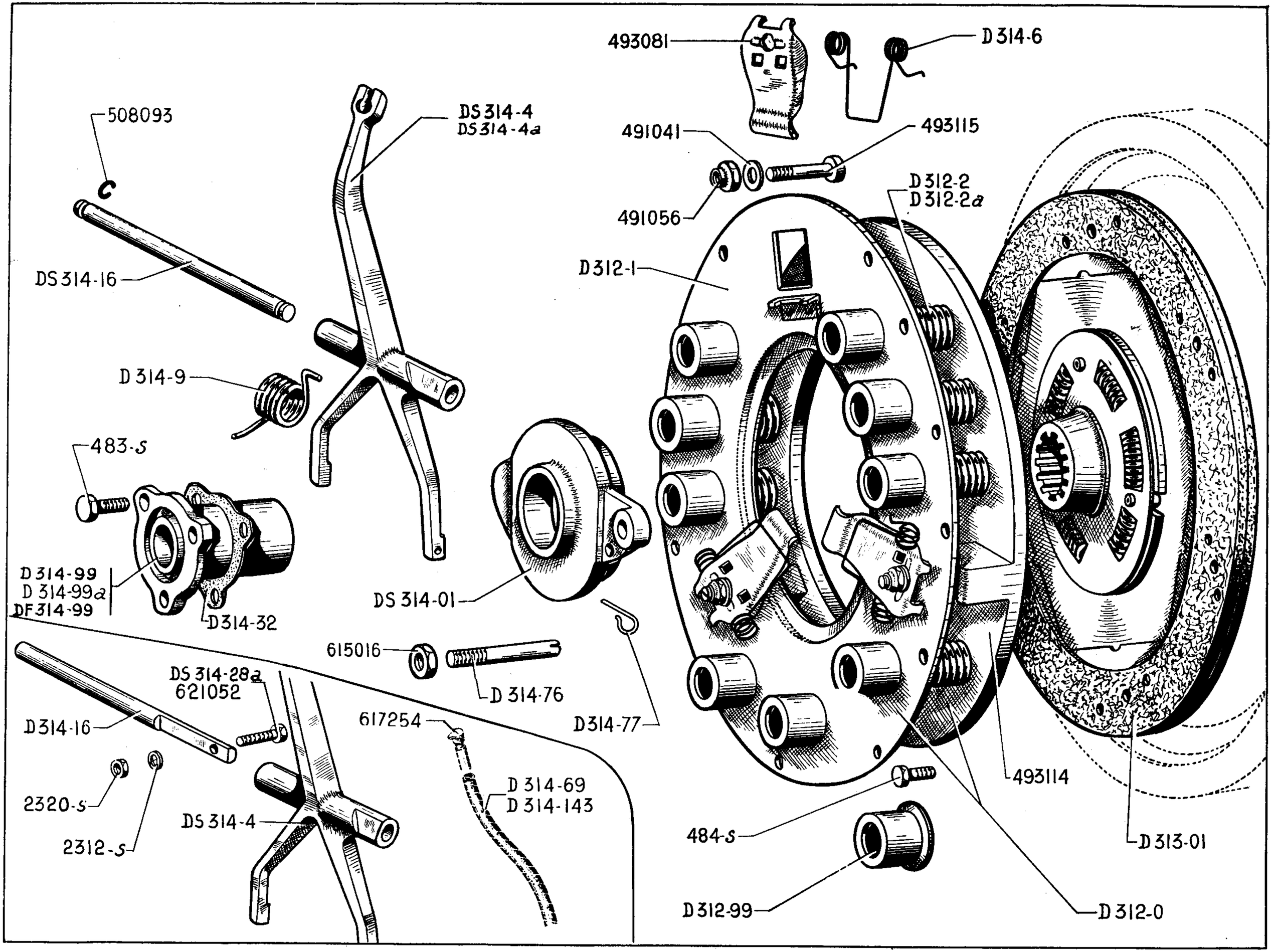
493081
D 314-6
508093
DS 314-4
DS 314-4a
491041
493115
C
491056
D 312-2
D 312-2a
DS 314-16
D 312-1
D 314-9
483-s
D 314-99
D 314-99a
DF 314-99
D 314-32
DS 314-01
615016
D 314-76
DS 314-28a
621052
D 314-16
617254
D 314-77
2320-s
2312-s
DS 314-4
D 314-69
D 314-143
493114
484-s
D 313-01
D 312-99
D 312-0

NUMBER	DESCRIPTION	No. OFF
D 312-0	Clutch mechanism (R.VI).	1
D 312-1	Clutch toggle carrier plate 243 mm. (R.VI).	1
D 312-2	Clutch spring (marked green) (R.VI).	3
D 312-2a	Clutch spring (marked white) (R.VI).	6
D 312-99	Cup for clutch spring. height 26.5 mm. internal diameter 29 mm. (R.VI).	9
D 313-01	Clutch disc (hub with springs) 215 mm. diameter 12 splines (R.VI).	1
DS 314-01	Housing for thrust bearing with bearing.	1
DS 314-4	Clutch withdrawal fork, thickness of head 11 mm. Until September 1960.	1
DS 314-4a	Clutch withdrawal fork, thickness of head 8.5 mm. Since September 1960.	1
DS 314-6	Return spring for clutch toggles (R.VI).	3
D 314-9	Return spring for clutch withdrawal fork (R.VI).	1
D 314-16	Spindle for clutch withdrawal fork (10 x 118) Until May 1959.	1
DS 314-16	Spindle for clutch withdrawal fork (10 x 124.6) 2 grooves for circlips Since May 1959.	1

NUMBER	DESCRIPTION	No. OFF
DS 314-28a	Screw, hex. head 5 diameter 23 long securing fork spindle March 1958 - May 1959.	1
D 314-32	Paper joint for ball thrust bearing sleeve (R.VI).	1
D 314-69	*Flexible pipe between lubricator and thrust bearing (3 × 6 × 120) (R. VI). Until February 1956. No longer supplied.*	1
D 314-76	Guide pin for thrust bearing, threaded 9 diameter 125 pitch, total length 52 mm.	1
D 314-77	Retaining spring for clutch thrust bearing	2
D 314-99	Hub for thrust bearing (with clearance on the collar). Until February 1957.	1
D 314-99a	Hub for thrust bearing (no clearance on the collar). Since February 1957.	1
DF 314-99	Hub for thrust bearing (mountain ratio assembly).	1
D 314-143	*Flexible pipe between lubricator and thrust bearing (5 × 7 × 100) (R. VI). February 1956 – April 1956. No longer supplied.*	1
483-S	Screw, hex. head 7 diameter 15 long securing hub for thrust bearing (R.III).	3
483-S	Screw, hex. head 7 diameter 17.5 long securing clutch mechanism on engine flywheel (R.III).	6

NUMBER	DESCRIPTION	No. OFF
2.312-S	Washer 5.5 x 12 under screw securing fork spindle (R.III). March 1958 - May 1959.	1
2.320-S	Nut, hex. 5 diameter 75 pitch, height 3.5 mm. locking fork spindle (R.III). March 1958 - May 1959.	1
491.041	Washer 10 x 18 x 2.5 for clutch toggle adjusting screw (R.VI).	3
491.056	Nut, 8 diameter 75 pitch for clutch toggle adjusting screw (R.VI).	3
493.081	Clutch toggle 87.5 mm. long (R.VI).	3
493.114	Clutch pressure plate, 216 mm. diameter, holes for toggle screws 8.5 mm. 10.5 mm. and 16 mm. diameter (R.VI).	1
493.115	Screw, cylindrical head 8 diameter 41 long for clutch toggle adjustment (R.VI).	3
508.093	Circlip 8.8 x 10.8 securing clutch fork spindle (R.I). Since May 1959.	2
615.016	Nut, hex. 9 diameter 125 pitch, height 4 mm. locking guide pin for clutch thrust bearing (R.I).	1
617.254	*Lubricator 'Radior' for clutch thrust bearing (R. VI). Until April 1956. No longer supplied.*	1
621.052	*Screw, hex. head 5 diameter × 17 long securing clutch fork spindle (R. I). Until March 1958. Replaced by DS 314-28a; order in addition: 1-2.312-S (R. III), 1-2.322-S (R. III).*	1

NUMBER	CASING NUMBER	FIXING OF PIPE ASSEMBLY FLANGES	FIXING OF THE TRANSMISSION DRIVE	REMARKS
DS 33-0	DS 331-1c	At 2 points	By 7 mm diameter screws	Until March 1957.
DS 33-0a	-	At 3 points	-	March 1957 - September 1958.
DS 33-0c	DS 331-1d	-	-	September 1958 - September 1960.
DS 33-0j	DF 331-1c	-	-	- supplied without water pump driveshaft. September 1960 - October 1961.
DS 33-0i	-	-	By 9 mm diameter screws	Since October 1961.
Composition	Gearbox complete with front and rear pipe assemblies on cover, clutch withdrawal fork and bearing, brake discs, lateral arm and upper support, water pump driveshaft.			

NUMBER	DIAMETER OF HOUSING FOR THE FRONT BEARINGS	TAPPED FOR DRIVESHAFT GREASER	DIAMETER OF HOLE SECURING SUSPENSION PUMP	LOCKING OF CLUTCH WITH-DRAWAL FORK SPINDLE	TAPPED FOR FIXING TUBE BETWEEN PUMP & CONTROL VALVE	DISTANCE BETWEEN BEARING FACES OF DYNAMO PLATES	REMARKS
	mm		mm			mm	
D 331-1b	68	with	16	By screw	without	86	*Until October 1957. Replaced by DS 331-1c; order in addition: 1-DS 251-2, 1-DS 314-16, 1-D 331-2a (R. VI), 1-D 331-3b, 1-D 331-13b, 1-D 332-95c or 1-D 332-95d, 1-4925-S (R. VI), 2-508.093 (R. I), 2-620.088 (R. I), 1-620.110 (R. VI).*
D 331-1c	62	-	-	-	-	-	*October 1957 - March 1958. Replaced by DS 331-1c; order in addition: 1-DS 314-16, 2-508.093 (R. I), 2-620.110 (R. VI).*
DS 331-1a	-	without	-	-	-	-	*March 1958 - September 1958. Replaced by DS 331-1c; order in addition: 1-DS 314-16, 2-508.093 (R. I).*
DS 331-1c	-	-	-	by circlips	-	-	For replacement of the preceding numbers.
DS 331-1	-	-	9	by screws	-	-	*September 1958 - May 1959. Replaced by DS 331-1d; order in addition: 1-DS 314-16, 2-508.093 (R. I).*
DS 331-1d	-	-	-	by circlips	with	-	May 1959 - September 1960.
DF 331-1c	-	-	-	-	-	100	September 1960 - September 1962.
DF 331-1d	-	-	-	-	-	-	Since September 1962.

62-GEARBOX COMPLETE-HOUSING-LID

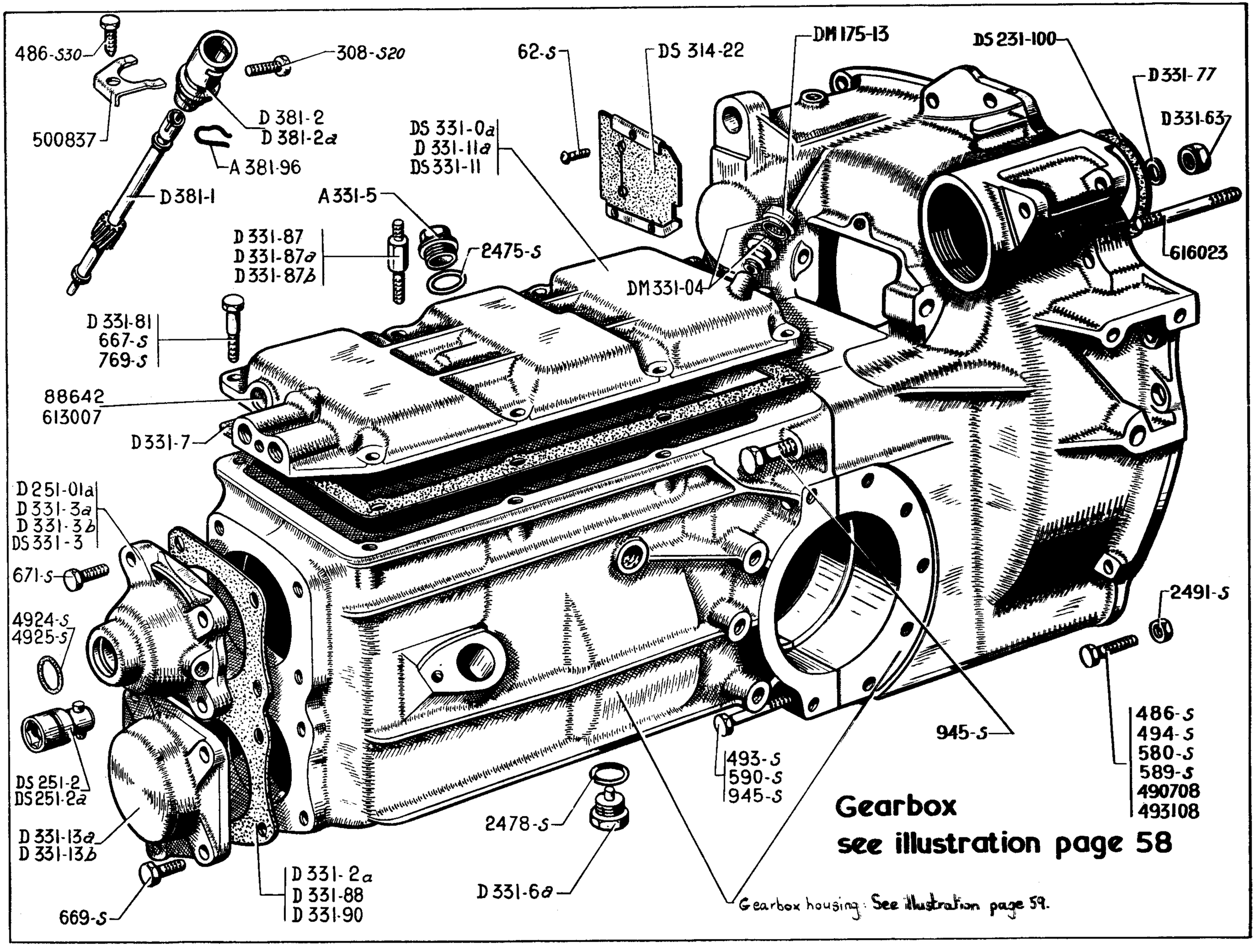

NUMBER	DESCRIPTION	No. OFF
A 331-5	Filler plug, hex. head 30 diameter 200 pitch.	1
A 381-96	Locking clip for speedometer cable 2.5 mm. thick. Since March 1958.	1
DM 175-13	Filter for breather on gearbox (R.VI).	1
DS 231-100	Joint, paper between clutch housing and cylinder block (40 x 50 x 0.1) (R.VI). Since October 1959.	1
D 251-01a	*Bearing cap for mainshaft front bearing complete with starting handle dog. Until June 1957. Replaced by D 331-3a; order in addition: 1-DS 251-2, 1-4925-S (R. VI).*	1
DS 251-2	Starting handle dog with pin (assembly with ring seal in bearing cap) June 1957 - March 1962.	1
DS 251-2a	Starting handle dog with pin (with groove for ring seal) Since March 1962.	1
DS 314-22	Closing plate, rubber for clutch withdrawal fork opening.	1
DS 331-0a	Gearbox lid, fitted with shafts, forks and breather.	1
DM 331-04	Breather on gearbox with filter.	1
D 331-2a	Joint double on front face of gearbox casing (R.VI).	1

NUMBER	DESCRIPTION	No. OFF
D 331-3a	Front bearing cap for mainshaft, bearing housing 62 mm diameter depth 2.15 mm. June 1957 - October 1957.	1
D 331-3b	*Front bearing cap for mainshaft, bearing housing 67·5 mm diameter, depth 67·5 mm diameter, depth 5·35 mm (with internal groove for ring seal). October 1957 – March 1962. Replaced by DS 331-3; order in addition 1-DS 251-2a, 1-4·924-S (R. VI).*	1
DS 331-3	Front bearing cap for mainshaft, bearing housing 67.5 mm. diameter depth 5.35 mm., (without internal groove for ring seal) Since March 1962.	1
D 331-6a	Drain plug, hex. head, 16 diameter 150 pitch, with magnetised dowel (R.VI).	1
D 331-7	Joint, paper for gearbox lid (R.VI).	1
D 331-11a	Lid for gearbox (Assembly without breather).	1
DS 331-11	Lid for gearbox with 1 tapping 9 diameter for fitting breather.	1
D 331-13a	Front bearing cap for bevel pinion shaft, bearing housing 62 mm. diameter, depth 2.15 mm. Until October 1957.	1
D 331-13b	Front bearing cap for bevel pinion shaft, bearing housing 67.5 mm. diameter, depth 5.35 mm. Since October 1957.	1
D 331-63	Nut, hex. with collar 12 diameter 175 pitch for assembling gearbox and clutch housing (R.VI).	4

NUMBER	DESCRIPTION	No. OFF
D 331-77	Washer 12.5 x 18 x 2.5 under nuts assembling gearbox and clutch housing.	4
D 331-81	Screw, hex. head, 8 diameter 32 mm. long securing and centring gearbox lid.	2
D 331-87	Shouldered stud, securing gearbox lid and support for rear R.H. and L.H. pipe assemblies, shoulder 25.5 mm. long, threaded 8 diameter 125 pitch, total length 66.5 mm. Since May 1956.	2
D 331-87a	Shouldered stud, securing gearbox lid and support for rear L.H. pipe assembly, cylindrical 14 mm. diameter, length of shoulder 28 mm. threaded 8 diameter 125 pitch, total length 66.5 mm. Since May 1956.	1
D 331-87b	Shouldered stud, securing gearbox lid 8 diameter, 125 pitch, total length 42.5 mm. Since May 1956.	1
D 331-88	Joint for front bearing cap for bevel pinion shaft (R.VI). Until October 1957.	1
D 331-90	Joint for front bearing cap for mainshaft (R.VI). Until October 1957.	1
D 381-1	Pinion for speedometer drive (15 teeth).	1
DF 381-1	Pinion for speedometer drive (17 teeth) (mountain ratio assembly).	1
D 381-2	Socket for speedometer pinion, with thread for oil return, cable locked by flexible clip. Since March 1958.	1
D 381-2a	*Socket for speedometer pinion (cable locked by screw). Until March 1958. Replaced by D 381-2, order in addition: 1-A 381-96.*	1
62-S	Screw, round head, 4 diameter 7.5 long, securing closing plate for clutch withdrawal fork opening (R.III)	3

NUMBER	DESCRIPTION	No. OFF
308-S-20	Screw, hex head 6 diameter 25 long (slot on head) securing cable (R.III). Until March 1958.	1
486-S	Screw, hex. head, 7 diameter 22.5 long securing clutch housing on engine (R.III).	2
486-S-30	Screw, hex. head pointed 7 diameter 22.5 long securing socket for speedometer pinion (R.III).	1
493-S	Screw, hex. head 7 diameter 40 long assembling gearbox and clutch housing (R.III).	4
494-S	Screw, hex. head 7 diameter 42 long, securing clutch housing to sump. (R.III).	2
580-S	Screw, hex. head 7 diameter 32.5 long, securing clutch housing on engine (R.III).	1
589-S	Screw, hex. head 7 diameter 60 long, securing clutch housing on engine (R.III).	2
590-S	Screw, hex. head 7 diameter 65 long, assembling gearbox and clutch housing (R.III).	3

NUMBER	DESCRIPTION	No. OFF
667-S	Screw, hex. head 8 diameter 25 long, securing gearbox lid (R.III).	
	Until May 1956.	3
	Since May 1956.	2
669-S	Screw, hex. head 8 diameter 30 long, securing front bearing cap for bevel pinion shaft (R.III). Until October 1957.	5
671-S	Screw, hex. head 8 diameter 35 long, securing bearing cap (R.III).	
	Until October 1957.	4
	Since October 1957.	9
769-S	Screw, hex. head 8 diameter 60 long, securing gearbox lid and pipe assembly supports (R.III). Until May 1956.	3
945-S/	Screw, hex. head 10 diameter 48 long, assembling gearbox and clutch housing (R.III).	2
2.475-S	C and A washer 30.5 x 38 x 2.3 for filler plug (R.VI).	1
2.478-S	Joint, copper, 16.3 x 22 x 2 for drain plug (R.VI).	1

NUMBER	DESCRIPTION	No. OFF
2.491-S	Nut, hex. 7 diameter 100 pitch, securing gearbox casing on sump (R.III).	2
4.924-S	Ring seal 18.4 x 24.1 x 27 on starting handle dog (R.VI). Since March 1962.	1
4.925-S	Ring seal 19.8 x 27 x 3.6 for front bearing cap for mainshaft (R.VI). June 1957 - March 1962.	1
88.642	Expanding sealing washer 15.9 mm. diameter (R.I).	1
490.708	Screw, round head, special 7 diameter 22.5 long, securing clutch housing on engine (R.I).	2
493.108	Screw, 7 diameter. 38.5 long, securing clutch housing on engine (R.I).	2
500.837	Clamp for speedometer pinion socket (R.I).	1
613.007	Expanding sealing washer 12 mm. diameter (R.I).	1
616.023	Stud, 12 diameter 74 long, threaded 18 and 22 for assembling gearbox and clutch housing (R.I).	4

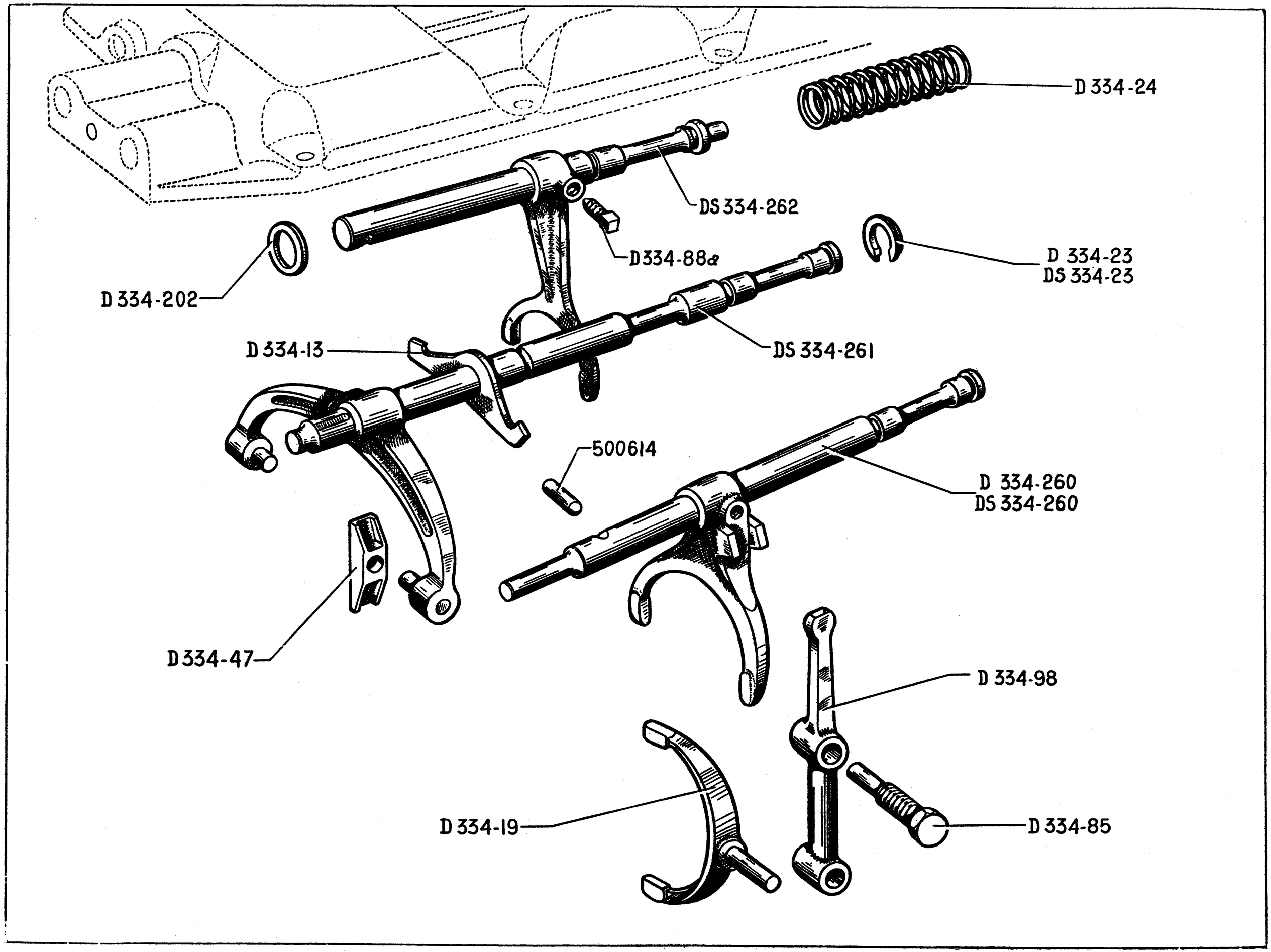
D 334-24
DS 334-262
D 334-88a
D 334-23
DS 334-23
D 334-202
D 334-13
DS 334-261
500614
D 334-260
DS 334-260
D 334-47
D 334-98
D 334-19
D 334-85

NUMBER	DESCRIPTION	No. OFF
D 334-13	Locking piece for 1st, 2nd and reverse speeds.	1
D 334-19	Selector fork for 1st speed.	1
D 334-23	Thrust collar, open, for return spring, 3 mm. thick.	
	Until May 1956.	6
	Since May 1956.	5
DS 334-23	Thrust collar, open, for return spring for 1st and 2nd speeds, 6 mm. thick. Since May 1956.	1
D 334-24	Return spring for forks 19 x 25.2 x 13 coils.	3

NUMBER	DESCRIPTION	No. OFF
D 334-47	Slide block for 3rd and 4th speed selector fork.	2
D 334-85	Pin, hex. head (threaded 14 diameter 100 pitch) total length 44.5 mm. for lever controlling 1st speed selector fork.	1
D 334-88a	Screw, square head pointed 9 diameter 16.5 long, securing fork.	3
D 334-98	Lever controlling 1st speed selector fork.	1
D 334-202	Washer 14 x 20 x 1.4 on reverse speed selector fork shaft.	1

NUMBER	DESCRIPTION	No. OFF
D 334-260	*Shaft for 1st and 2nd speed selector fork (spindle diameter 14 mm. on 135·5 mm. of length). Until May 1956. Replaced by DS 334-260; order in addition: 1-DS 334-23.*	1
DS 334-260	Shaft for 1st and 2nd speed selector fork (spindle diameter 14 mm. on 138.5 mm. of length). Since May 1956.	1
DS 334-261	Shaft for 3rd and 4th speed selector fork.	1
DS 334-262	Shaft for reverse speed selector fork.	1
500.614	Locking plunger (9.5 x 18.2) (R.I).	2

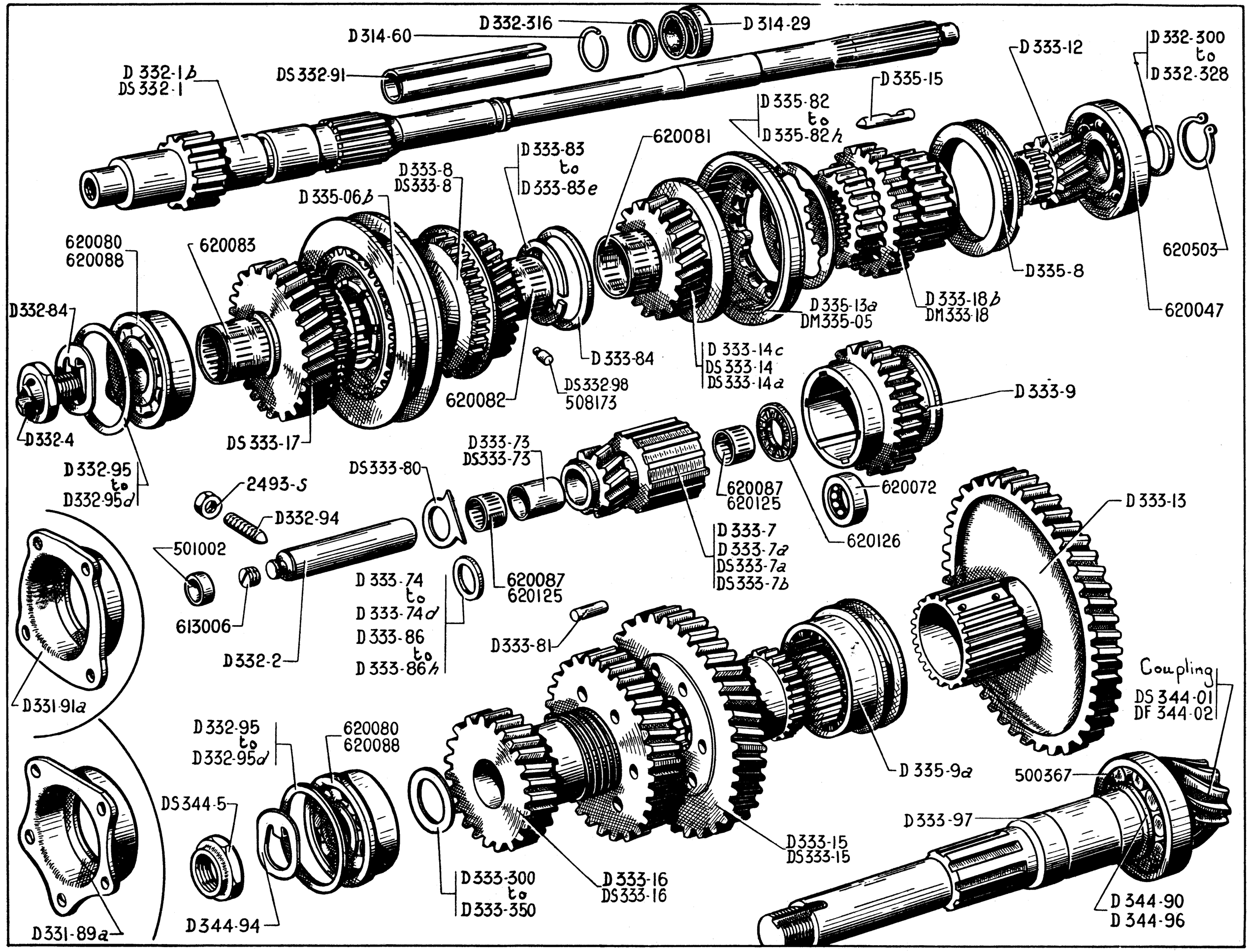
D 332-316
D 314-29
D 314-60
D 332-1b
DS 332-1
DS 332-91
D 333-12
D 332-300
to
D 332-328
D 335-15
D 335-82
to
D 335-82h
620081
D 333-83
to
D 333-83e
D 333-8
DS 333-8
D 335-06b
620080
620088
620083
620503
D 335-8
D 332-84
D 333-18b
DM 333-18
D 335-13a
DM 335-05
620047
D 333-84
D 333-14c
DS 333-14
DS 333-14a
DS 332-98
508173
620082
D 333-9
D 332-4
DS 333-17
D 333-73
DS 333-73
DS 333-80
D 332-95
to
D 332-95d
2493-S
620087
620125
620072
D 333-13
D 332-94
D 333-7
D 333-7a
DS 333-7a
DS 333-7b
620126
501002
D 333-74
to
D 333-74d
D 333-86
to
D 333-86h
620087
620125
613006
D 332-2
D 333-81
D 331-91a
Coupling
DS 344-01
DF 344-02
D 332-95
to
D 332-95d
620080
620088
D 335-9a
500367
DS 344-5
D 333-97
D 333-15
DS 333-15
D 333-300
to
D 333-350
D 333-16
DS 333-16
D 344-90
D 344-96
D 331-89a
D 344-94

NUMBER	DESCRIPTION	No. OFF
D 314-29	Sealing ring on mainshaft (20 x 35 x 18) (R.VI).	1
D 314-60	Circlip for sealing ring (17.8 x 21.8 x 2) Until January 1957.	1
D 331-89a	Housing for front bearing on bevel pinion (5 holes 9 mm. diameter). Until October 1957.	1
D 331-91a	Housing for front bearing on mainshaft (4 holes 9 mm. diameter) Until October 1957.	1
D 332-1b	*Mainshaft, 503 mm. long (with groove for sealing ring circlip). Until January 1957. Replaced by DS 332-1; order in addition: 1-DS 332-91.*	1
DS 332-1	Mainshaft, 503 mm. long (without groove for sealing ring circlip). Since January 1957.	1
D 332-2	Shaft for intermediate reverse pinion (16 x 120).	1
D 332-4	Starting handle dog nut, 16 diameter 150 pitch, 7 mm. diameter bore.	1
D 332-84	Lockwasher for starting handle dog nut (internal diameter 17 mm.)	1
DS 332-91	Distance piece for sealing ring (20 x 21.6 x 118.8) Since January 1957.	1
D 332-94	Grub screw, pointed 7 diameter 31 long, securing shaft.	1
	Washer, 54 x 61 for front bearing adjustment. Until October 1957.	As nec.
D 332-95	0.05 mm. thick	
D 332-95a	0.10 mm. thick	
D 332-95b	0.20 mm. thick	

NUMBER	DESCRIPTION	No. OFF
	Washer, 54 x 66.5 for front bearing adjustment. Since October 1957.	
D 332-95c	0.1 mm. thick	As nec.
D 332-95d	0.05 mm. thick	As nec.
DS 332-98	Dowel 2.7 x 2.9 x 5 for half washers between 2nd and 3rd speed pinions.	1
	Spacing washer for rear ball bearing on mainshaft 20 x 28.	As nec.
D 332-300	Thickness 4.5	
D 332-301	" 4.53	
D 332-302	" 4.56	
D 332-303	" 4.59	
D 332-304	" 4.62	
D 332-305	" 4.65	
D 332-306	" 4.68	
D 332-307	" 4.71	
D 332-308	" 4.74	
D 332-309	" 4.77	
D 332-310	" 4.80	
D 332-311	" 4.83	
D 332-312	" 4.86	
D 332-313	" 4.89	
D 332-314	" 4.92	
D 332-315	" 4.95	
D 332-316	" 4.98 (and spacer for sealing ring)	1
D 332-317	" 5.01	
D 332-318	" 5.04	
D 332-319	" 5.07	
D 332-320	" 5.10	
D 332-321	" 5.13	
D 332-322	" 5.16	
D 332-323	" 5.19	
D 332-324	" 5.22	
D 332-325	" 5.25	
D 332-326	" 5.28	
D 332-327	" 5.31	
D 332.328	" 5.34	
D 332-329	" 5.49	
D 332-330	" 6.48	
D 333-7	*Intermediate reverse pinion (10 teeth, total length 73 mm.). Until April 1956. Replaced by D 333-7a; order in addition: 1-D 333-74, a, b, c, or d according to adjustment.*	1

NUMBER	DESCRIPTION	No. OFF
D 333-7a	Intermediate reverse pinion, 10 teeth total length 72.35 mm. (mainshaft 2nd speed pinion 18 teeth). April 1956 - January 1961.	1
DS 333-7a	Intermediate reverse pinion, 10 teeth, total length 80.48 mm. (mainshaft 2nd speed pinion 17 teeth). Since July 1961.	1
DS 333-7b	*Intermediate reverse pinion, 10 teeth, total length 72·35 mm. (mainshaft 2nd speed pinion 17 teeth). January 1961 – July 1961. Replaced by DS 333-7a; order in addition: 1-DS 333-73 (R. VI), 1-DS 333-80 (R. VI), 2-620.125 (R. VI), 1-620.126 (R. VI).*	1
D 333-8	*3rd speed mainshaft pinion with dogs (22 teeth, helix angle 31° × 50'). Until July 1957. Replaced by DS 333-8; order in addition: 1-DS 333-16.*	1
DS 333-8	3rd speed mainshaft pinion with dogs (22 teeth, helix angle 33°30') Since July 1957.	1
D 333-9	Intermediate reverse speed sliding pinion 28 teeth, total length 29.5 mm. Replaces type 38 mm. long.	1
D 333-12	1st speed mainshaft pinion (11 teeth, 18 splines).	1
D 333-13	1st speed pinion on bevel pinion shaft (39 teeth).	1
DS 333-14c	*2nd speed mainshaft pinion, 18 teeth, 7° angle. Until June 1958. Replaced by DS 333-14a (see schedule page 71).*	1
DS 333-14	*2nd speed mainshaft pinion, 18 teeth, 7° 30' angle. June 1958 – January 1961. Replaced by DS 333-14a (see schedule page 71).*	1

NUMBER	DESCRIPTION	No. OFF
DS 333-14a	2nd speed mainshaft pinion 17 teeth. Since January 1961.	1
D 333-15	*2nd and reverse speed pinions on bevel pinion shaft, 34 teeth. Until January 1961. Replaced by DS 333-15 (see schedule page 71).*	1
DS 333-15	2nd and reverse speed pinions on bevel pinion shaft, 33 teeth Since January 1961.	1
D 333-16	*3rd and 4th speed gear train on bevel pinion shaft (23 and 27 teeth, helix angle of 3rd speed pinion 31° 50'). Until July 1957. Replaced by DS 333-16; order in addition: 1-DS 333-8.*	1
DS 333-16	3rd and 4th speed gear train on bevel pinion shaft (23 and 27 teeth), helix angle of 3rd speed pinion 33° 30'. Since July 1957.	1
DS 333-17	4th speed mainshaft pinion with dogs (27 teeth, assembly without washer between teeth and dogs). Replaces type with washer.	1
D 333-18b	*Reverse speed mainshaft pinion, 25 teeth. Until June 1958. Replaced by DM 333-18 (see schedule page 71).*	1
DM 333-18	Reverse speed mainshaft pinion, (25 teeth) Since June 1958.	1
D 333-73	Distance piece between needle bearing cages in intermediate reverse speed pinion (length 28.15 mm, replaces one 28.7 mm. long) (R.VI). Until July 1961.	1
DS 333-73	Distance piece between needle bearing cages in intermediate reverse speed pinion (16.6 x 18.9 x 42.28) (R.VI). Since July 1961.	1
	Washer 16 x 26 for adjustment of intermediate reverse speed pinion April 1956 - July 1961.	As nec.
D 333-74	Thickness 1.58	
D 333-74a	" 1.69	
D 333-74b	" 1.80	
D 333-74c	" 1.91	
D 333-74d	" 2.02	

NUMBER	DESCRIPTION	No. OFF
DS 333-80	Stop washer with lug for intermediate reverse speed pinion (R. VI). Since July 1961.	1
D 333-81	Dowel between 3rd and 4th speed train and 2nd and reverse speed pinion on bevel pinion shaft (8 x 17).	
	Until April 1962.	6
	Since April 1962.	3
	Half washer between 2nd and 3rd speed mainshaft pinions.	As nec.
D 333-83	Thickness 2.77 to 2.80	
D 333-83a	" 2.80 to 2.83	
D 333-83b	" 2.83 to 2.86	
D 333-83c	" 2.86 to 2.89	
D 333-83d	" 2.89 to 2.92	
D 333-83e	" 2.92 to 2.95	
D 333-84	Washer, 40 x 45 x 2.7, locking half washers between 2nd and 3rd speed mainshaft pinions.	1
	Washers (16 x 23) for adjustment of intermediate reverse speed pinion Until April 1956.	As nec.
D 333-86	Thickness 0.88	
D 333-86a	" 0.94	
D 333-86b	" 1	
D 333-86c	" 1.06	
D 333-86d	" 1.12	
D 333-86e	" 1.18	
D 333-86f	" 1.24	
D 333-86g	" 1.30	
D 333-86h	" 1.36	
D 333-97	Distance piece for bevel pinion (mountain ratio assembly).	1
	Thrust washer for bevel pinion front bearing 25 x 33.	As nec.
D 333-300	Thickness 2.65	
D 333-301	" 2.69	
D 333-302	" 2.73	
D 333-303	" 2.77	
D 333-304	" 2.81	
D 333-305	" 2.85	
D 333-306	" 2.89	
D 333-307	" 2.93	
D 333-308	" 2.97	
D 333-309	" 3.01	
D 333-310	" 3.05	

NUMBER	DESCRIPTION	No. OFF
D 333-311	Thickness 3.09	
D 333-312	" 3.13	
D 333-313	" 3.17	
D 333-314	" 3.21	
D 333-315	" 3.25	
D 333-316	" 3.29	
D 333-317	" 3.33	
D 333-318	" 3.37	
D 333-319	" 3.41	
D 333-320	" 3.45	
D 333-321	" 3.49	
D 333-322	" 3.53	
D 333-323	" 3.57	
D 333-324	" 3.61	
D 333-325	" 3.65	
D 333-326	" 3.69	
D 333-327	" 3.73	
D 333-328	" 3.77	
D 333-329	" 3.81	
D 333-330	" 3.85	
D 333-331	" 3.89	
D 333-332	" 3.93	
D 333-333	" 3.97	
D 333-334	" 4.01	
D 333-335	" 4.05	
D 333-336	" 4.09	
D 333-337	" 4.13	
D 333-338	" 4.19	
D 333-339	" 4.21	
D 333-340	" 4.25	
	(mountain ratio assembly).	
D 333-341	Thickness 2.17	
D 333-344	" 2.29	
D 333-347	" 2.41	
D 333-350	" 2.53	
DM 335-05	2nd speed synchromesh. June 1958 - July 1962.	1
DM 335-05a	2nd speed synchromesh. Since July 1962.	1
D 335-06b	Synchromesh double for 3rd and 4th speed pinions.	1
D 335-8	Sliding collar operating meshing plungers.	1
D 335-9a	1st speed sliding collar on bevel pinion shaft.	1
D 335-13a	*2nd speed synchromesh. Until June 1958. Replaced by DM 335-05 (see schedule page 71).*	1
D 335-15	Set of 12 meshing plungers.	1

The numbers underlined indicate new parts and do not appear on the illustrations.

NUMBER	DESCRIPTION	No. OFF
	Internally toothed ring for adjusting 2nd speed synchromesh	As nec.
D 335-82	Thickness 0.4	
D 335-82a	" 0.7	
D 335-82b	" 1	
D 335-82c	" 1.2	
D 335-82d	" 1.5	
D 335-82e	" 0.2	
D 335-82f	" 0.35	
D 335-82g	" 0.50	
D 335-82h	" 0.60	
DS 344-01	Crown wheel and bevel pinion 8 x 31 with rear bearing fitted. Replaces 9 x 35 type.	1
DF 344-02	Crown wheel and bevel pinion 7 x 31 (mountain use).	1
DS 344-5	Nut, hex. 24 diameter 150 pitch with shoulder 25 mm. diameter locking bevel pinion (replaces type with 30 mm. die shoulder).	1
D 344-90	Locking ring for rear roller bearing on bevel pinion (toothed side), internal chamfer on one face.	1
D 344-94	*Lockwasher for nut, locking bevel pinion. Until July 1957. No longer supplied. (See Technical Note No. 676).*	1

NUMBER	DESCRIPTION	No. OFF
D 344-96	Locking ring for rear roller bearing on bevel pinion (shaft side) without chamfer.	1
2.493-S	Nut, hex. 7 diameter 100 pitch for locking grub screw on reverse speed shaft (R.III).	1
500.367	Rear bearing for bevel pinion (30 x 72 x 19) (R.VI). (mountain use).	1
501.002	Cap for hole for reverse speed shaft 20 mm. diameter (R.I).	1
508.173	Dowel 3.5 x 5 holding half washer between 2nd and 3rd speed pinion (R.VI). Until December 1956.	1
613.006	Threaded plug 7 diameter 125 pitch 6 mm. long (R.I). Until February 1959.	1
620.047	Bearing 20 x 62 x 17 on rear of mainshaft (R.VI).	1
620.072	Ball thrust bearing 16 x 30 x 9.5 for intermediate reverse pinion (R.I). Until July 1961.	2
620.080	Double ball bearing (25 x 62 x 25.4) marked D on inner face (R. I). Until October 1957.	
	- Front of mainshaft.	1
	- Front of bevel pinion.	1

NUMBER	DESCRIPTION	No. OFF
620.081	Cage for needle bearings 33 x 36 x 30 for 2nd speed mainshaft pinion (R.VI).	1
620.082	Cage for needle bearings 33 x 36 x 33.2 for 3rd speed mainshaft pinion (R.VI).	1
620.083	Cage for needle bearings 33 x 36 x 36 for 4th speed mainshaft pinion (R.VI).	1
620.087	Cage for needle bearings 16 x 19 x 18 for intermediate reverse pinion (R.VI). Until July 1961.	2
620.088	Double bearing, shouldered 25 x 62 x 67.5 x 25.4 (R.I). Since October 1957.	
	- Front of mainshaft	1
	- Front of bevel pinion	1
620.125	Cage for needle bearings (16 x 19 x 20) for intermediate reverse pinion (R.VI). Since July 1961.	2
620.126	Needle thrust bearing (16 x 31.4 x 2.8) for reverse speed sliding pinions) (R.VI). Since July 1961.	1
620.503	Circlip for locking bearing (R.VI).	2

Arrangement	By replacement of one of these parts	It is necessary to change all the following parts
Until June 1958	- D 333-14c pinion - D 333-15 - - D 333-18b - - D 335-13a synchromesh	1-DS 333-7a, 1-DS 333-14a, 1-DS 333-15, 1-DM 333-18, 1-DS 333-73 (R. VI), 1-DS 333-80 (R. VI), 1-DM 333-05, 2-620.125 (R. VI), 1-620.126 (R. VI).
June 1958 - January 1961	- DS 333-14 pinion - D 333-15 -	1-DS 333-7a, 1-DS 333-14a, 1-DS 333-15, 1-DS 333-73 (R. VI), 1-DS 333-80 (R. VI), 2-620.125 (R. VI), 1-620.126 (R. VI).

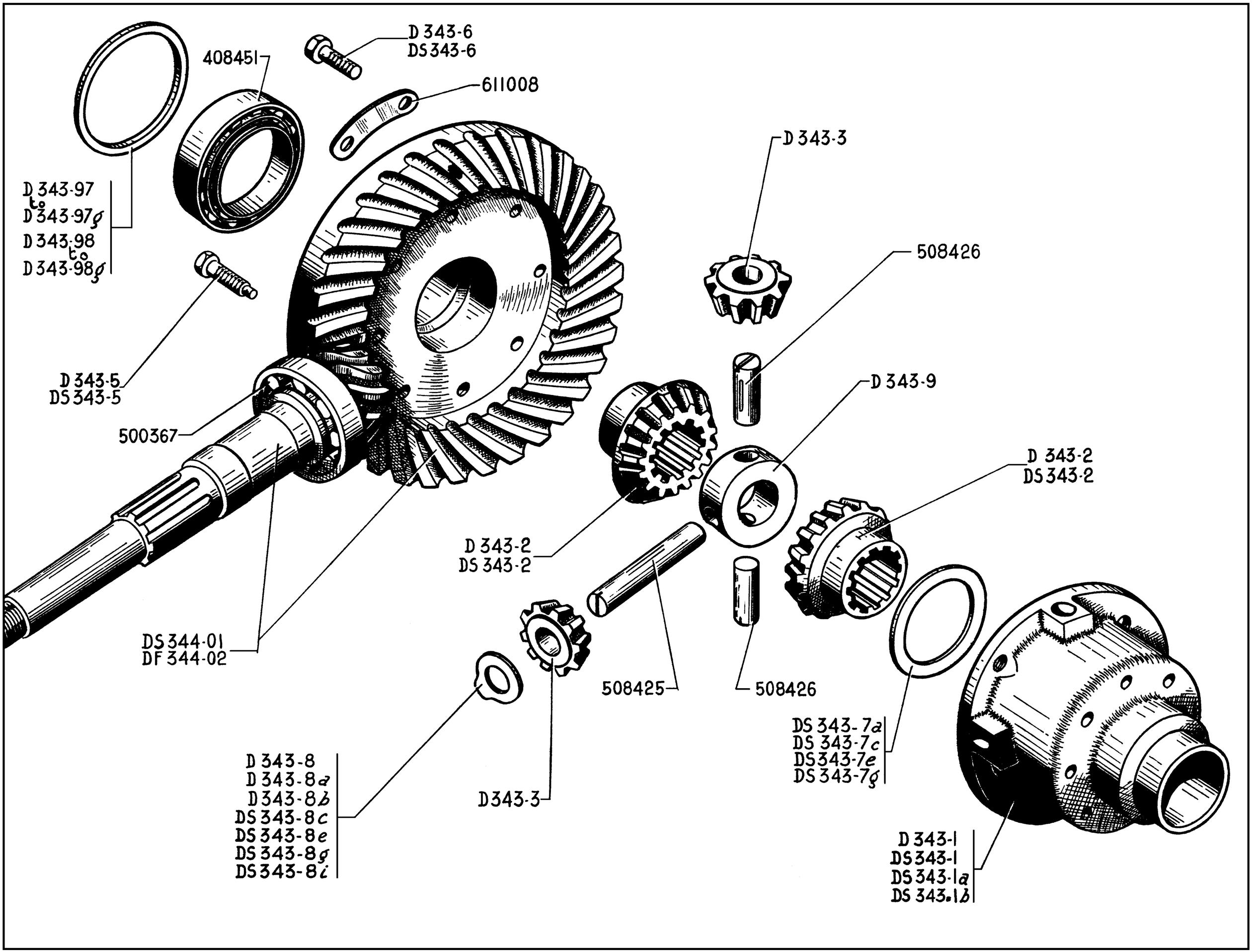
D 343-6
DS 343-6
408451
611008
D 343-97
to
D 343-97g
D 343-98
to
D 343-98g
D 343-3
508426
D 343-5
DS 343-5
D 343-9
500367
D 343-2
DS 343-2
D 343-2
DS 343-2
DS 344-01
DF 344-02
508425
508426
DS 343-7a
DS 343-7c
DS 343-7e
DS 343-7g
D 343-8
D 343-8a
D 343-8b
DS 343-8c
DS 343-8e
DS 343-8g
DS 343-8i
D 343-3
D 343-1
DS 343-1
DS 343-1a
DS 343.1b

NUMBER	DESCRIPTION	No. OFF
D 343-1	*Differential housing (distance between planet wheel bearing face and crown wheel bearing face 52 mm.). Until March 1957. Replaced by DS 343-1b; order in addition: 3-DS 343-5, 5-DS 343-6, 1-DS 343-7a to DS 343-7g (R. VI), 2-DS 343-8c to DS 343-8i (R VI), according to adjustment.*	1
DS 343-1	*Differential housing (distance between planet wheel bearing face and crown wheel bearing face 54 mm. threaded 10 diameter × 150 pitch for crown wheel fixing). March 1957 – July 1959. Replaced by DS 343-1b; order in addition: 3-DS 343-5, 5-DS 343-6, 1-DS 343-7a to DS 343-7g (R. VI), 2-DS 343-8c to DS 343-8i (R. VI), according to adjustment.*	1
DS 343-1a	*Differential housing (distance between planet wheel bearing face and crown wheel bearing face 54 mm., between bearing faces of satellites 74·4 mm. threaded 10 diameter × 125 pitch for crown wheel fixing). July 1959–June 1960. Replaced by DS 343-1b; order in addition: 1-DS 343-7a to DS 343-7g (R. VI), 2-DS 343-8c to DS 343-8i (R. VI) according to adjustment.*	1
DS 343-1b	Differential housing (distance between planet wheel bearing face and crown wheel bearing face 54 mm. between bearing faces of satellites 75.6 mm. threaded 10 diameter 125 pitch for crown wheel fixing). Since June 1960.	1
D 343-2	Planet wheel (16 teeth, distance between bearing face and end of shank 14 mm). Until March 1957.	2
DS 343-2	Planet wheel (16 teeth, distance between bearing face and end of shank 15 mm.) Since March 1957.	2
D 343-3	Satellite pinion 10 teeth, total height 10.6 mm.	4

NUMBER	DESCRIPTION	No. OFF
D 343-5	Screw, hex. head, with dowel for locking satellite pinion spindle (10 diameter x 150 pitch, 37.5 long). Until July 1959.	3
DS 343-5	Screw, hex. head, with dowel for locking satellite pinion spindle (10 diameter x 125 pitch, 37.5 long). Since July 1959.	3
D 343-6	Screw, hex. head, (10 diameter x 150 pitch, 26 long), securing crown wheel on differential housing. Until July 1959.	5
DS 343-6	Screw, hex. head, (10 diameter x 125 pitch, 26 long), securing crown wheel on differential housing. Since July 1959.	5
	Thrust washer for planet wheel 38.25 x 56 (R. VI).	As nec.
DS 343-7a	Thickness 1.91	
DS 343-7c	" 2.03	
DS 343-7e	" 2.15	
DS 343-7g	" 2.27	
	Fixed thrust washer for satellite pinions, 14 x 27.7. Until June 1960.	As nec.
D 343-8	Thickness 1.4	
D 343-8a	" 1.2	
D 343-8b	" 1	
	Fixed thrust washer for satellite pinions, 14 x 28. Since June 1960.	As nec.
DS 343-8c	Thickness 1.71	
DS 343-8e	" 1.85	
DS 343-8g	" 1.99	
DS 343-8i	" 2.13	
D 343-9	Crosshead for satellite spindles 25 x 40.5 x 20.	1

NUMBER	DESCRIPTION	No. OFF
	Distance washer for differential roller bearing, 74 x 82.8:	As nec.
D 343-97	Thickness 2.9	
D 343-97a	" 3.3	
D 343-97b	" 3.7	
D 343-97c	" 4.1	
D 343-97d	" 4.5	
D 343-97e	" 4.9	
D 343-97f	" 5.3	
D 343-97g	" 5.7	
	Washer for adjustment of differential roller bearing 72 x 82.8.	As nec.
D 343-98	Thickness 3	
D 343-98a	" 3.05	
D 343-98b	" 3.10	
D 343-98c	" 3.15	
D 343-98d	" 3.20	
D 343-98e	" 3.25	
D 343-98f	" 3.30	
D 343-98g	" 3.25	
DS 344-01	Crown wheel and bevel pinion 8 x 31 with rear bearing fitted. Replaces type 9 x 35.	1
DF 344-02	Crown wheel and bevel pinion 7 x 31 (mountain use).	1
408.451	Taper roller bearing (40 x 80 x 19.5) for differential housing (R.VI).	2
500.367	Rear bearing for bevel pinion (30 x 72 x 19) (R. VI), (mountain use).	1
508.425	Satellite spindle (14 x 109) (R.I).	1
508.426	Satellite spindle (14 x 47.5) (R.I).	2
611.008	Lockplate, double for screw securing crown wheel to differential housing (R.I). Until July 1959.	4

74-LOW PRESSURE PIPE SYSTEM-NON-RETURN VALVE

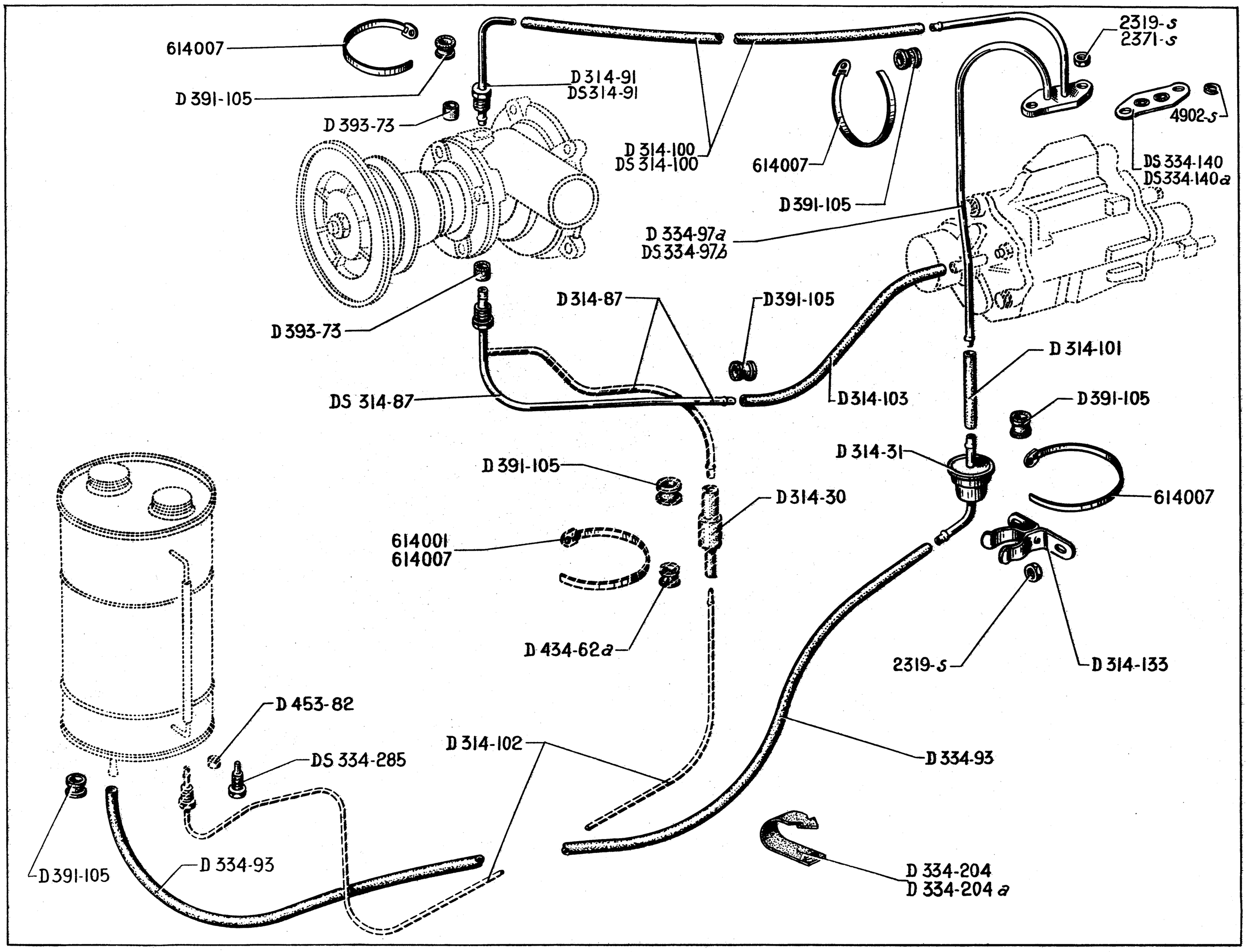

NUMBER	DESCRIPTION	No. OFF
	Until September 1960	
D 314-30	*Non-return valve between reservoir and low pressure pump (R. VI). Until September 1956. Replaced by DS 314-87; order in addition: 1-DS 334-285 (R. VI). See Technical Note No. 645.*	1
D 314-31	Non-return valve between hydraulic gear selector and reservoir (R.VI).	1
D 314-87	*Feed pipe assembly for low pressure pump (2 pipes). Until September 1956. Replaced by DS 314-87; order in addition: 1-DS 334-285 (R. VI). See Technical Note No. 645.*	1
DS 314-87	Feed pipe for low pressure pump. Since September 1956.	1
D 314-91	*Metal return pipe on low pressure pump, external diameter 8 mm., length 65 mm. Until March 1960. Replaced by DS 314-91.*	1
DS 314-91	Metal elbowed return pipe on low pressure pump 8 mm. diameter Since March 1960.	1
D 314-100	*Flexible return pipe between hydraulic gear selector and low pressure pump, internal diameter 7 mm., length 500 mm. Until March 1960. Replaced by DS 314-100; order in addition: 1-DS 314-91.*	1
DS 314-100	Flexible return pipe between hydraulic gear selector and low pressure pump, internal diameter 8 mm. length 430 mm. Since March 1960.	1
D 314-101	Flexible connecting pipe between pipe assembly on hydraulic gear selector and non-return valve, internal diameter 7 mm, length 110 mm.	1
D 314-102	*Metal pipe for supplementary to low pressure pump (between reservoir and non-return valve). Until September 1956. Replaced by DS 314-87; order in addition: 1-DS 334-285 (R. VI). See Technical Note No. 645.*	1

NUMBER	DESCRIPTION	No. OFF
D 314-103	Flexible feed pipe between pipe assembly of low pressure pump and hydraulic gear selector, 7 mm diameter, 360 mm long.	1
D 314-133	Bracket for non-return valve.	1
D 334-93	Flexible return pipe between non-return valve and reservoir, internal diameter 7 mm, length 1,100 mm.	1
D 334-97a	Pipe assembly on hydraulic gear selector to non-return valve and low pressure pump (flange with 2 hole fixing 5.5 mm diameter). Until March 1957.	1
D 334-97b	Pipe assembly on hydraulic gear selector (flange with 2 hole fixing 6.5 mm diameter). Since March 1957.	1
DS 334-140	Seal plate between pipe assembly D 334-97a and hydraulic gear selector (2 holes 10.6 mm; 2 fixing holes 5.5 mm, 46 mm between centres (R. VI). October 1956 - March 1957. Replaces preceding type by ordering in addition: 2-4.902-S.	1
DS 334-140a	Seal plate between pipe assembly DS 334-97b and hydraulic gear selector (2 holes 10.6 mm; 2 fixing holes 6.5 mm, 46 mm between centres) (R. VI). Since March 1957.	1
	Clip retaining flexible return pipe between non-return valve and reservoir.	
D 334-204	Length 162 mm.	1
D 334-204a	Length 122 mm.	1
DS 334-285	Plug, hex. head, with dowel (threaded 9 diameter x 125 pitch) closing reservoir feed (used when non-return valve is omitted) (R. VI).	1

NUMBER	DESCRIPTION	No. OFF
D 391-105	Protective sleeve (internal diameter 15 mm) under tightening clip:	
	- for flexible pipes.	9
	- for non-return valves (pump side). Until September 1956.	1
D 393-73	Rubber sleeve for union on pipe, on low pressure pump, internal diameter 8.5 mm, length 12.5 mm.	2
D 434-62a	Protective sleeve under tightening clip of non-return valve (reservoir side), internal diameter 11.5 mm. Until September 1956.	1
D 453-82	Rubber sleeve, 4.5 x 6.5 x 11:	
	- for pipe union on reservoir. Until September 1956.	1
	- for plug DS 334-285 (used when non-return valve is omitted).	1
2.319-S	Nut, hex., 5 diameter 75 pitch (R. III) securing:	
	- bracket for non-return valve.	2
	- pipe assembly on hydraulic gear selector. Until March 1957.	2
2.371-S	Nut, hex., 6 diameter 100 pitch securing pipe assembly on hydraulic gear selector (R. III). Since March 1957.	2
4.902-S	Ring seal 7.2 x 11 x 1.9, for seal plate DS 334-140 (R. VI). Since October 1956.	2
614.001	Tightening clip for non-return valve (reservoir side), 132 mm long (R. VI). Until September 1956.	1
614.007	Tightening clip 190 mm long (R. VI)	
	- for flexible pipes.	9
	- non-return valve (pump side). Until September 1956.	1

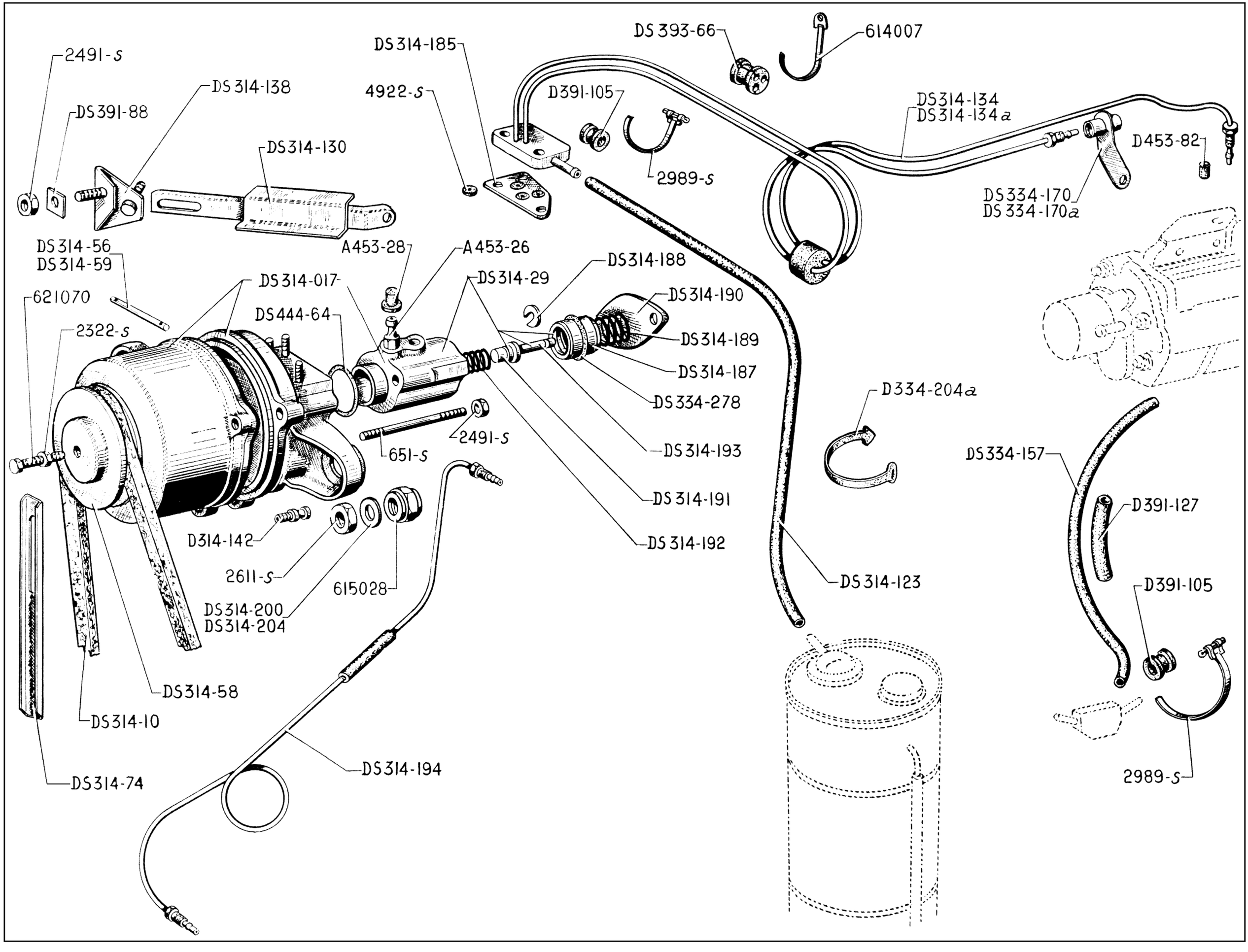
2491-S
DS391-88
DS314-138
DS314-130
DS314-185
4922-S
DS393-66
614007
D391-105
2989-S
DS314-134
DS314-134a
D453-82
DS334-170
DS334-170a
DS314-56
DS314-59
A453-28
A453-26
DS314-188
DS314-017
DS314-29
DS314-190
621070
DS444-64
2322-S
DS314-189
DS314-187
DS334-278
D334-204a
2491-S
651-S
DS314-193
DS314-191
DS314-192
DS334-157
D391-127
D314-142
2611-S
615028
DS314-123
DS314-200
DS314-204
D391-105
DS314-58
DS314-10
DS314-194
DS314-74
2989-S

NUMBER	DESCRIPTION	No. OFF
	Since September 1960	
A 453-26	Bleed screw on centrifugal regulator.	2
A 453-28	Cap for bleed screw (R. VI).	2
DS 314-017	Centrifugal regulator complete with pulley.	1
DS 314-10	Belt driving centrifugal regulator (R. VI).	1
DS 314-29	Body for clutch engagement control with cup, piston and plunger.	1
DS 314-56	Pin, 4 x 45, for primary lever.	2
DS 314-58	Driving pulley for centrifugal regulator.	1
DS 314-59	Pin, 4 x 55, for secondary lever.	4
DS 314-74	Tie-rod for centrifugal regulator.	1
DS 314-123	Flexible pipe, 7 x 14 x 785 mm long, for return from centrifugal regulator.	1
DS 314-130	Reinforcement for stay securing centrifugal regulator.	1
DS 314-134	Pipe assembly between centrifugal regulator and hydraulic gear selector. Until January 1961.	1
DS 314-134a	Pipe assembly between centrifugal regulator and hydraulic gear selector. Since January 1961.	1
DS 314-138	Swivel plate for reinforcement stay for centrifugal regulator.	1
D 314-142	Overflow pipe on centrifugal regulator.	1
DS 314-185	Seal plate between pipe assembly and centrifugal regulator (R. VI).	1
DS 314-187	Control piston for plunger on clutch re-engagement control (20 x 24).	1
DS 314-188	Washer, anchoring plunger on clutch re-engagement control piston.	1
DS 314-189	Return spring for piston of clutch re-engagement control plunger (16 x 30).	1

NUMBER	DESCRIPTION	No. OFF
DS 314-190	Closing flange for clutch re-engagement control.	1
DS 314-191	Thrust cup for slide valve return spring.	1
DS 314-192	Return spring for clutch re-engagement control slide valve (11.5 x 26).	1
DS 314-193	Plunger for clutch re-engagement control (4 x 37.5).	1
DS 314-194	Connecting pipe between front brake, right-hand and centrifugal regulator. Until September 1962.	1
DS 314-194a	Connecting pipe between front brake, right-hand and centrifugal regulator. Since September 1962.	1
	Washer, 10.5 x 30, for adjustment of centrifugal regulator.	As nec.
DS 314-200	Thickness 2	
DS 314-201	" 2.4	
DS 314-202	" 2.8	
DS 314-203	" 3.2	
DS 314-204	" 3.6	
DS 334-157	Flexible elbowed pipe, 7 x 14, between hydraulic gear selector and 4-way union.	1
DS 334-170	Union with plate fixing connection of pipe assembly DS 314-134 and DS 334-186g, 35 mm between centres. Until January 1961.	1
DS 334-170a	Union with plate fixing connection of pipe assembly DS 314-134a and DS 334-186h, 70 mm between centres. Since January 1961.	1
D 334-204a	Flexible clip securing return pipe from centrifugal regulator on return pipe of high pressure pump.	1
DS 334-278	Ring seal, 19.4 x 24.8 x 2.7, for piston of clutch re-engagement control (R. VI).	1
DS 391-88	Plate under nut securing:	
	- tie-rod on regulator.	1
	- reinforcement on centrifugal regulator.	1

NUMBER	DESCRIPTION	No. OFF
D 391-105	Flexible sleeve under tightening clip:	
	- for return pipe on centrifugal regulator.	1
	- for pipe between hydraulic gear selector and 4-way union.	1
D 391-127	Sheath protecting pipe between hydraulic gear selector and 4-way union.	1
DS 393-66	Distance piece protecting pipe assembly.	2
DS 444-64	Ring seal, 21.15 x 26 x 2.45 between centrifugal regulator and clutch re-engagement control.	1
D 453-82	Sleeve for pipe assembly union and pipe between regulator and front brake.	4
651-S	Stud, 7 diameter x 80 long (threaded 17 and 10.5), assembling regulator and clutch re-engagement control (R. III).	2
2.322-S	Nut, hex., 5 diameter x 75 pitch, locking adjustment screw of centrifugal regulator (R. III).	1
2.491-S	Nut, hex., 7 diameter x 100 pitch (R. III) :	
	- securing tie-rod.	1
	- securing reinforcement.	1
	- assembling regulator and re-engagement control.	1
2.611-S	Nut, hex., 10 diameter x 150 pitch, securing centrifugal regulator on water pump body (R. III).	1
2.989-S	Clip, 245 mm long (R. VI) tightening:	
	- return pipe on centrifugal regulator.	1
	- pipe between hydraulic gear selector and 4-way union.	4
4.922-S	Ring seal, between pipe assembly and centrifugal regulator (R. VI).	3
614.007	Tightening clip, 190 mm long (R. VI):	
	- for return pipe on reservoir.	1
	- for distance pieces protecting pipe assembly.	2
615.028	Nut, 10 diameter x 150 pitch (32 across flats) securing pump cover and thrust of centrifugal regulator (R. VI).	1
620.521	Circlip for plunger anchorage washer of clutch engagement control (R. VI).	1
621.070	Screw, hex. head, 5 diameter x 26.5 mm long, for adjustment of centrifugal regulator (R. I).	1

The numbers underlined indicate new parts and do not appear on the illustrations.

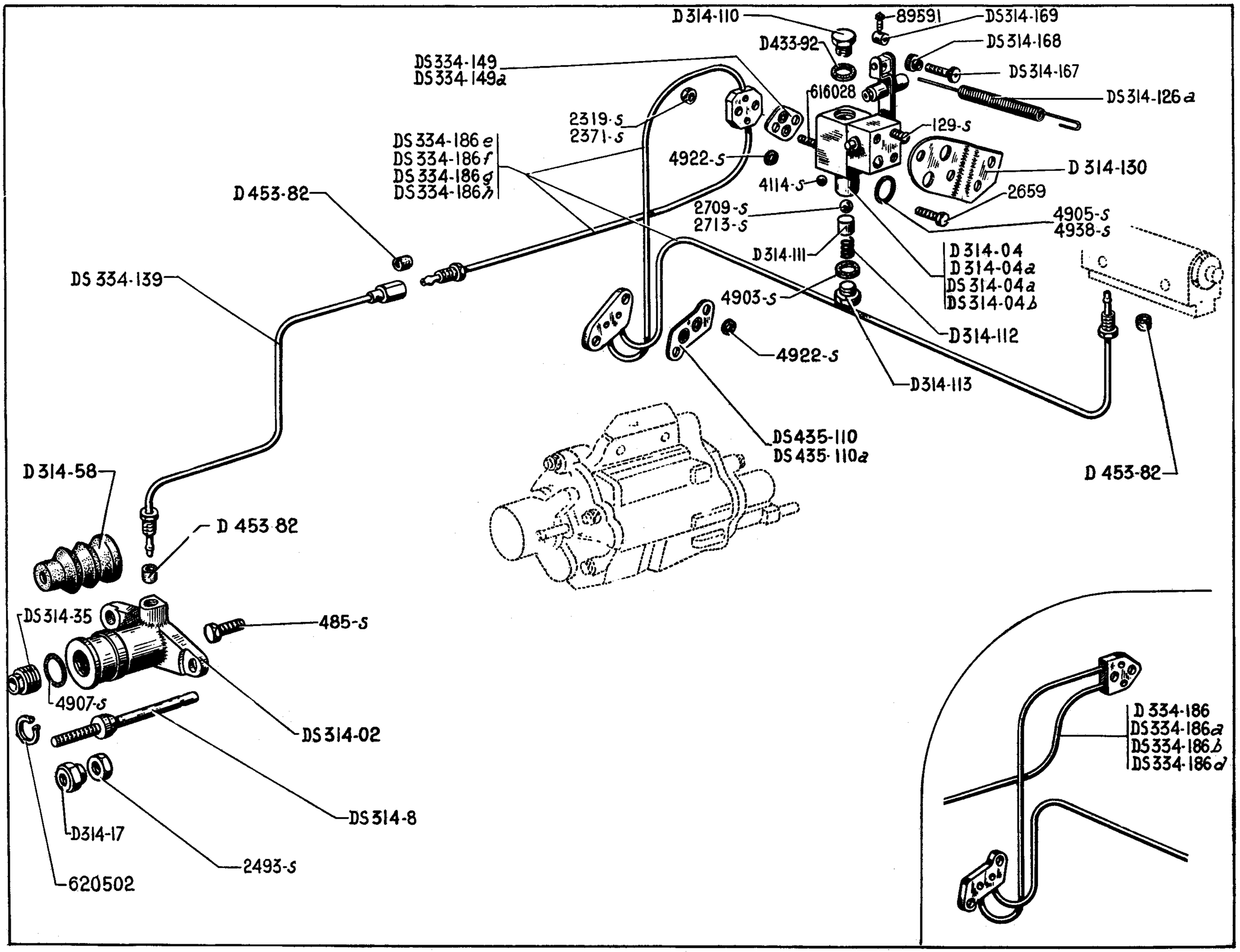
D 314-110
89591
DS314-169
D433-92
DS 314-168
DS 314-167
DS 314-126 a
DS 334-149
DS 334-149a
616028
2319-S
2371-S
129-S
DS 334-186 e
DS 334-186 f
DS 334-186 g
DS 334-186 h
4922-S
D 314-130
4114-S
2659
D 453-82
2709-S
2713-S
4905-S
4938-S
D 314-111
D 314-04
D 314-04a
DS 314-04a
DS 314-04b
DS 334-139
4903-S
D 314-112
4922-S
D 314-113
DS 435-110
DS 435-110a
D 453-82
D 314-58
D 453 82
DS 314-35
485-S
4907-S
DS 314-02
DS 314-8
D314-17
2493-S
620502
D 334-186
DS 334-186a
DS 334-186b
DS 334-186d

NUMBER	DESCRIPTION	No. OFF
DS 314-02	Cylinder with piston for clutch control (piston locked by nut). Replaces type with piston locked by circlip.	1
D 314-04	*Clutch re-engagement control (5 mm. diameter stud securing pipe assembly). Until March 1957. Replaced by D 314-04a; order in addition: 1-DS 314-126a, 1-DS 314-169 (R. VI), 1-89.591 (R. III).*	1
D 314-04a	Clutch re-engagement control (5 mm. diameter stud securing pipe assembly) with knurled adjusting device. For replacement of D 314-04.	1
DS 314-04a	*Clutch re-engagement control (6 mm. diameter stud securing pipe assembly). March 1957 - July 1959. Replaced by DS 314-04b; order in addition: 1-DS 314-126a, 1-DS 314-169 (R. VI), 1-89.591 (R. III).*	1
DS 314-04b	Clutch re-engagement control (6 mm. diameter stud securing pipe assembly) with knurled adjusting device. Since July 1959.	1
D 314-8	Push rod for operating clutch fork.	1
D 314-17	Nut, hex. 7 diameter 100 pitch for clutch fork adjustment. Until September 1960.	1
DS 314-35	Stop nut for clutch control piston. Since March 1960.	1
D 314-58	Dust cover on clutch control cylinder (concertina rubber).	1
D 314-110	Plug, hex. head, 7 diameter x 21 long (upper).	1
D 314-111	Piston for clutch re-engagement control (7.5 x 9).	1
D 314-112	Spring for piston, 5 mm diameter (R. VI).	1

NUMBER	DESCRIPTION	No. OFF
D 314-113	Plug, hex. head, 9 diameter x 7 long (lower).	1
DS 314-126a	Spring between accelerator control and clutch re-engagement control 15.8 mm, diameter 110 mm long.	1
D 314-130	Bracket for clutch re-engagement control.	1
DS 314-167	Screw, round head, 5 diameter x 22 long, for adjustment of clutch re-engagement control spring. Since July 1959.	1
DS 314-168	Locknut, round, knurled, 5 diameter x 75 pitch, for spring adjustment. Since July 1959.	1
DS 314-169	Trunnion securing clutch re-engagement control spring (threaded 4 diameter x 75 pitch) (R. VI).	1
DS 334-139	Pipe between pipe assembly and clutch cylinder (1 male union, 1 female union) (arrangement in 2 parts). January 1959 - April 1962.	1
DS 334-139a	Pipe between pipe assembly and clutch cylinder (2 male unions). Since April 1962.	1
DS 334-149	Seal plate between pipe assembly D334-186 and clutch re-engagement control (2 holes 7.6 mm diameter, 2 fixing holes 5.5 mm diameter, 14 mm between centres) (R. VI). October 1956 - March 1957. Replaces earlier type by ordering in addition: 2-4.922-S.	1
DS 334-149a	Seal plate between pipe assembly D 334-186a and clutch re-engagement control, (2 holes 7.6 mm diameter, 2 fixing holes 6.5 mm. diameter, 14 mm between centres) (R. VI). Since March 1957.	1

NUMBER	DESCRIPTION	No. OFF
	Pipe assembly between pressure distribution block, hydraulic gear selector clutch re-engagement control and clutch cylinder (and centrifugal regulator. Since September 1960). (Assembly in one part).	
D 334-186	- flange fixing holes 5.5 mm diameter. Until March 1957.	1
DS 334-186a	*- flange fixing holes 6·5 mm. diameter. March 1957 - January 1959. Replaced by DS 334-186d; order in addition: 1-DS 334-139, 1-D 453-82.*	1
DS 334-186b	- flange fixing holes 6.5 mm. diameter on hydraulic gear selector, 5.5 mm. diameter on clutch re-engagement control. For replacement of hydraulic gear selector D 334-07 by DS 334-07a. (Assembly in two parts).	1
DS 334-186d	- flange fixing holes 6.5 mm. diameter inlet and outlet on engagement control flange, parallel. January 1959 - July 1959.	1
DS 334-186e	- flange fixing holes 6.5 mm. diameter, inlet and outlet on engagement control flange, opposite (pressure distribution block 5 way). July 1959 - July 1960.	1
DS 334-186f	- pressure distribution block 3 way. July 1960 - September 1960.	1
DS 334-186g	- pressure distribution block 3 way and centrifugal regulator. September 1960 - January 1961.	
DS 334-186h	- gear change speed control fixed by studs (1 male union, clutch cylinder side). January 1961 - April 1962.	1
DS 334-186i	- (1 female union, clutch cylinder side). Since April 1962.	1

The numbers underlined indicate new parts and do not appear on the illustrations.

NUMBER	DESCRIPTION	No. OFF
D 433-92	Ring seal 6.9 x 9.5 x 2.4 under upper plug of clutch re-engagement control.	1
DS 435-110	Seal plate between pipe assembly D 334-186 and hydraulic gear selector (2 holes 7.6 mm. diameter 2 fixing holes 5.5 mm. diameter 30 mm. between centres) (R.VI). October 1956 - March 1957. Replaces earlier type by ordering in addition 2 - 4.922-S.	1
DS 435-110a	Seal plate between pipe assembly DS 334-186a and hydraulic gear selector (2 holes 7.6 mm. 2 fixing holes 6.5 mm.) (R.VI). Since March 1957.	1
D 453-82	Rubber sleeve for pipe union (4.5 x 5.5 x 11).	3
129-S	Screw, round head 5 diameter 25 long connecting body to bearing (R.III).	2
485-S	Screw, hex. head 7 diameter 20 long, securing clutch cylinder (R.III).	1

NUMBER	DESCRIPTION	No. OFF
2.319-S	Nut, hex., 4 diameter 75 pitch (R.III) securing seal plate on:	
	- clutch re-engagement control.	2
	- hydraulic gear selector. Until March 1957.	2
2.371-S	Nut, hex. 6 diameter 100 pitch (R.III). securing seal plate on:	
	- clutch re-engagement control	2
	- hydraulic gear selector	2
	Since March 1957.	
2.493-S	Nut, hex. 7 diameter 100 pitch for clutch fork adjustment (R.III). Until September 1960.	2
2.659	Screw, hex. head, 5 diameter 13 long (R.III). securing:	
	- control on bracket	2
	- control bracket on body	2
2.709-S	Ball 7 mm diameter (R. VI). Until May 1957.	1
2.713-S	Ball 6 mm. diameter (R.VI). Since May 1957.	1
4.114-S	Ball 4.5 mm. (R.VI).	1
4.903-S	Ring seal 8.9 x 12.7 x 1.9 under lower plug of clutch re-engagement control (R.VI).	1

NUMBER	DESCRIPTION	No. OFF
4.905-S	Ring seal 12.1 x 17.5 x 2.7 between body and bracket (R.VI). Until November 1960.	1
4.907-S	Ring seal 18.4 x 23.8 x 2.7 for cylinder controlling clutch (R.VI).	1
4.922-S	Ring seal 4.2 x 8 x 1.9 for seal plates (R.VI).	
	DS 334-149	2
	DS 435-110	2
	Since October 1956.	
4.938-S	Ring seal 12.1 x 15.9 x 1.9 between body and bracket for clutch re-engagement control (R.VI). Since November 1960.	1
89.591	Screw, square head 4 diameter 8 long securing spring on clutch re-engagement control (R.III).	1
616.028	Stud 6 diameter. 25.5 long threaded 7 and 9.5 securing flange on clutch re-engagement control (R.I). Since March 1957.	2
620.502	Circlip retaining clutch cylinder piston (R.VI).	1

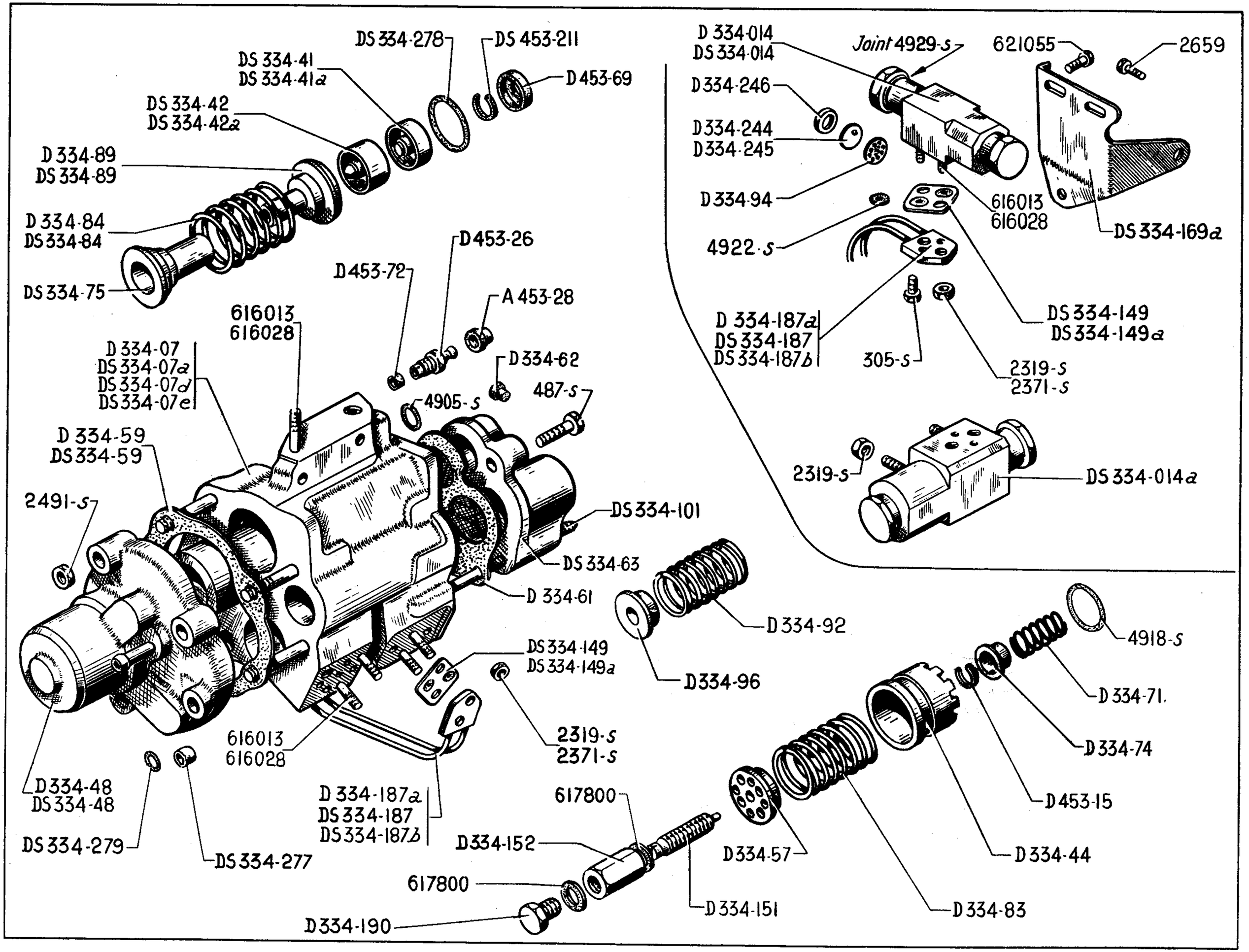
DS 334-278
DS 453-211
DS 334-41
DS 334-41a
D 453-69
DS 334-42
DS 334-42a
D 334-89
DS 334-89
D 334-84
DS 334-84
DS 334-75
D 453-26
D 453-72
A 453-28
616013
616028
D 334-07
DS 334-07a
DS 334-07d
DS 334-07e
D 334-62
487-s
4905-s
D 334-59
DS 334-59
2491-s
DS 334-101
DS 334-63
D 334-61
DS 334-149
DS 334-149a
2319-s
2371-s
616013
616028
D 334-48
DS 334-48
DS 334-279
DS 334-277
D 334-187a
DS 334-187
DS 334-187b
617800
D 334-152
617800
D 334-190
D 334-151
D 334-92
D 334-96
D 334-57
D 334-83
D 334-44
D 453-15
D 334-74
D 334-71
4918-s
D 334-014
DS 334-014
Joint 4929-s
621055
2659
D 334-246
D 334-244
D 334-245
D 334-94
616013
616028
DS 334-169a
4922-s
D 334-187a
DS 334-187
DS 334-187b
305-s
DS 334-149
DS 334-149a
2319-s
2371-s
2319-s
DS 334-014a

NUMBER	DESCRIPTION	No. OFF
A 453-28	Cap for bleed screw on hydraulic gear selector (R. VI). Until July 1957.	1
	Hydraulic gear selector and clutch control, with gear change speed control.	1
D 334-07	*- pipe assembly fixing by 5 mm. studs. Until March 1957. Replaced by DS 334-07a; order in addition: 1-DS 334-97b, 1-DS 334-121a, 1-DS 334-186b, 1-DS 334-140a, 1-DS 334-231, 1-DS 435-110a.*	
DS 334-07a	- pipe assembly fixing by 6 mm studs. March 1957 - September 1960.	
DS 334-07d	- centrifugal regulator assembly, gear change speed control perpendicular to hydraulic gear selector. September 1960 - January 1961.	
DS 334-07e	- centrifugal regulator assembly. gear change speed control parallel to hydraulic gear selector. January 1961 - September 1962.	
DS 334-07g	- Since September 1962.	1
D 334-014	Gear change speed control (pipe assembly fixing by 5 mm studs). Until March 1957.	1
DS 334-014	Gear change speed control (pipe assembly fixing by 6 mm studs, perpendicular to hydraulic gear selector). March 1957 - January 1961.	1
DS 334-014a	Gear change speed control (parallel to hydraulic gear selector). Since January 1961.	1
	Synchronising piston for 2nd and 4th speeds.	
DS 334-41	- 20 mm diameter, height 14 mm. (1st possibility).	2
DS 334-41a	- 20.2 mm diameter, height 14 mm. (2nd possibility).	2

NUMBER	DESCRIPTION	No. OFF
	Synchronising piston for 3rd speed.	
DS 334-42	- 20 mm. diameter, height 19 mm. (1st possibility).	1
DS 334-42a	- 20.2 mm diameter, height 19 mm. (2nd possibility).	1
D 334-44	Piston for automatic clutch control 38 mm. diameter, height 39.5 mm.	1
D 334-48	Front cover. Until September 1960.	1
DS 334-48	Front cover. (arrangement with centrifugal regulator). Since September 1960.	1
D 334-57	Shouldered thrust washer for automatic clutch control piston (28 mm. diameter, 3.5 mm. thick). Until September 1960.	1
D 334-59	Joint for front cover of hydraulic gear selector (R.VI). Until June 1956.	1
DS 334-59	Joint for front cover of hydraulic gear selector (R.VI). Since June 1956.	1
D 334-61	Joint for rear cover of hydraulic gear selector (R.VI).	1
D 334-62	Rubber plug for setting hole in hydraulic gear selector.	1
DS 334-63	Rear cover.	1
D 334-71	Spring for automatic clutch control valve (8.2 x 9.8 x 6 coils). Until September 1960.	1
D 334-74	Thrust collar for valve spring (13 mm. diameter, 6 mm. long) Until September 1960.	1

NUMBER	DESCRIPTION	No. OFF
DS 334-75	Thrust washer for synchronising piston return spring (total length 31.8 mm). Since February 1957.	1
D 334-83	Return spring for automatic clutch control piston (23 x 28.5 x 9 coils). Until September 1960.	1
D 334-84	Return spring for synchronising pistons (22.2 x 31.8 x wire diameter 4.8 mm). Until February 1957.	1
DS 334-84	Return spring for synchronising pistons (22.3 x 31.7 x wire diameter 4.7 mm). Since February 1957.	1
D 334-89	Thrust washer for synchronising piston return spring (40 mm diameter, 4 mm thick). Until February 1957.	1
DS 334-89	Thrust washer for synchronising piston return spring (total length 41 mm). Since February 1957.	1
D 334-92	Spring for automatic gear control valve (13.5 x 18 x 8 coils).	1
D 334-94	Filter, 10.5 mm diameter, 1 mm thick (R. VI).	1
D 334-96	Thrust washer for automatic gear control spring (24 mm diameter, 5.5 mm thick).	1
DS 334-101	Stud, shouldered, pointed, 7 diameter x 75 pitch (threaded 15 and 15), securing gear lever on hydraulic gear selector. Since September 1957.	2

NUMBER	DESCRIPTION	No. OFF
DS 334-149	Seal plate between pipe assembly D 334-187d, gear change speed control and hydraulic gear selector (2 holes 7.6; 2 fixing holes 5.5 mm diameter, 14 mm between centres) (R. VI). October 1956 - March 1957. Replaces earlier type by ordering in addition: 2-4.922-S.	2
DS 334-149a	Seal plate between pipe assembly DS 334-187, gear change speed control and hydraulic gear selector (2 holes 7.6; 2 fixing holes 6.5 mm diameter, 14 mm between centres) (R. VI). Since March 1957.	2
D 334-151	Adjusting screw for automatic clutch control (9 diameter x 125 pitch, total length 53.5 mm). Until September 1960.	1
D 334-152	Nut, hex., 9 diameter x 125 pitch, height 33 mm, for locking adjusting screw of hydraulic gear selector. Until September 1960.	1
DS 334-169a	Bracket for gear change speed control (without reinforcement). Replaces type with reinforcement.	1
D 334-187a	Feed pipe assembly for gear change speed control (2 pipes, fixing flange 2 holes 5.5 mm diameter). Until March 1957.	1
DS 334-187	Feed pipe assembly for gear change speed control DS 334-014 (2 pipes, fixing flange 2 holes 6.5 mm diameter). March 1957 - January 1961.	1
DS 334-187b	Feed pipe assembly for gear change speed control DS 334-014a. Since January 1961.	1
D 334-190	Plug, 9 diameter x 125 pitch, for locknut of hydraulic gear selector adjusting screw. Until September 1960.	1
D 334-244	Disc jet, central hole 10 mm. diameter (R. VI).	8
D 334-245	Disc jet, eccentric hole 10 mm diameter (R. VI).	7

NUMBER	DESCRIPTION	No. OFF
D 334-246	Distance piece between disc, 6.5 x 10 x 1.5.	14
DS 334-277	Aluminium stop for hydraulic gear selector pistons. Until June 1956.	1
DS 334-278	Ring seal, 19.4 x 24.8 x 2.7, for synchronising pistons of hydraulic gear selector (R. VI).	4
DS 334-279	Ring seal, 6.7 x 10.5 x 1.9, for hydraulic gear selector (R. VI). Until June 1956.	1
D 453-15	Circlip locking automatic clutch control valve. Until September 1960.	1
D 453-26	Bleed screw for hydraulic gear selector. Until July 1957.	1
D 453-69	Rubber joint between auxiliary clutch control cylinder and rear cover of hydraulic gear selector (6 x 17.5 x 3.5) (R. VI).	1
D 453-72	Joint for bleed screw of hydraulic gear selector 4.5 mm diameter (R. VI). Until July 1957.	1
DS 453-211	Split rubber ring between auxiliary clutch control cylinder and rear cover of hydraulic gear selector (6.9 x 9.5 x 2.4).	1
305-S	Screw, hex. head, 6 diameter 18 long, securing feed pipe assembly on gear change speed control (R. III). Since January 1961.	2
487-S	Screw, hex. head, 7 diameter x 25 long, securing rear cover (R. III).	2
2.319-S	Nut, hex., 5 diameter x 75 pitch, (R. III) securing:	
	- pipe assembly of gear change speed control. Until March 1957.	4
	- gear change speed control on hydraulic gear selector. Since January 1961.	2

NUMBER	DESCRIPTION	No. OFF
2.371-S	Nut, hex., 6 diameter x 100 pitch (R. III) securing:	
	- pipe assembly on gear change speed control and hydraulic gear selector. March 1957-January 1961	4
	- pipe assembly of gear change speed control on hydraulic gear selector. Since January 1961.	2
2.491-S	Nut, hex., 7 diameter x 100 pitch securing front cover (R. III).	4
2.659	Screw, hex. head, 5 diameter x 75 pitch, 13 long, securing bracket for gear change speed control (R. III). Until January 1961.	2
4.905-S	Ring seal, 12.1 x 17.5 x 2.7, for selector slide valve (R. VI).	1
4.918-S	Ring seal, 20.2 x 24 x 1.9 between automatic clutch control piston and rear cover of hydraulic gear selector (R. VI). Until September 1960	1
4.922-S	Ring seal, 4.2 x 8 x 1.9, for seal plates DS 334-149 and DS 334-149a (R. VI). Since October 1956.	4
4.929-S	Ring seal, 18.7 x 23.5 x 1.9, for plug in gear changed speed control (R. VI)	2
616.013	Stud, 5 diameter x 24 long (threaded 6 and 10) (R. I) securing pipe assemblies:	
	- on hydraulic gear selector.	8
	- on gear change speed control. Until March 1957.	2
616.028	Stud, 6 diameter x 27.5 long (threaded 7 and 11.5) securing pipe assemblies (R. I) :	
	- on hydraulic gear selector. Until September 1960.	8
	Since September 1960.	6
	- on gear changed speed control. March 1957 - January 1961.	2
616.049	Stud, 5 diameter 26 long, (threaded 7 and 10) securing gear change speed control (R. I).	1
616.059	Stud, 5 diameter 41 long, (threaded 7 and 12) securing gear change speed control (R. I).	1
617.800	Copper joint 9.2 x 14 x 0.5 (R. I). Until September 1960.	2
621.055	Screw, hex. head, 5 diameter x 11 long, securing gear change speed control (R.I). Until January 1961.	2

The numbers underlined indicate new parts and do not appear on the illustrations.

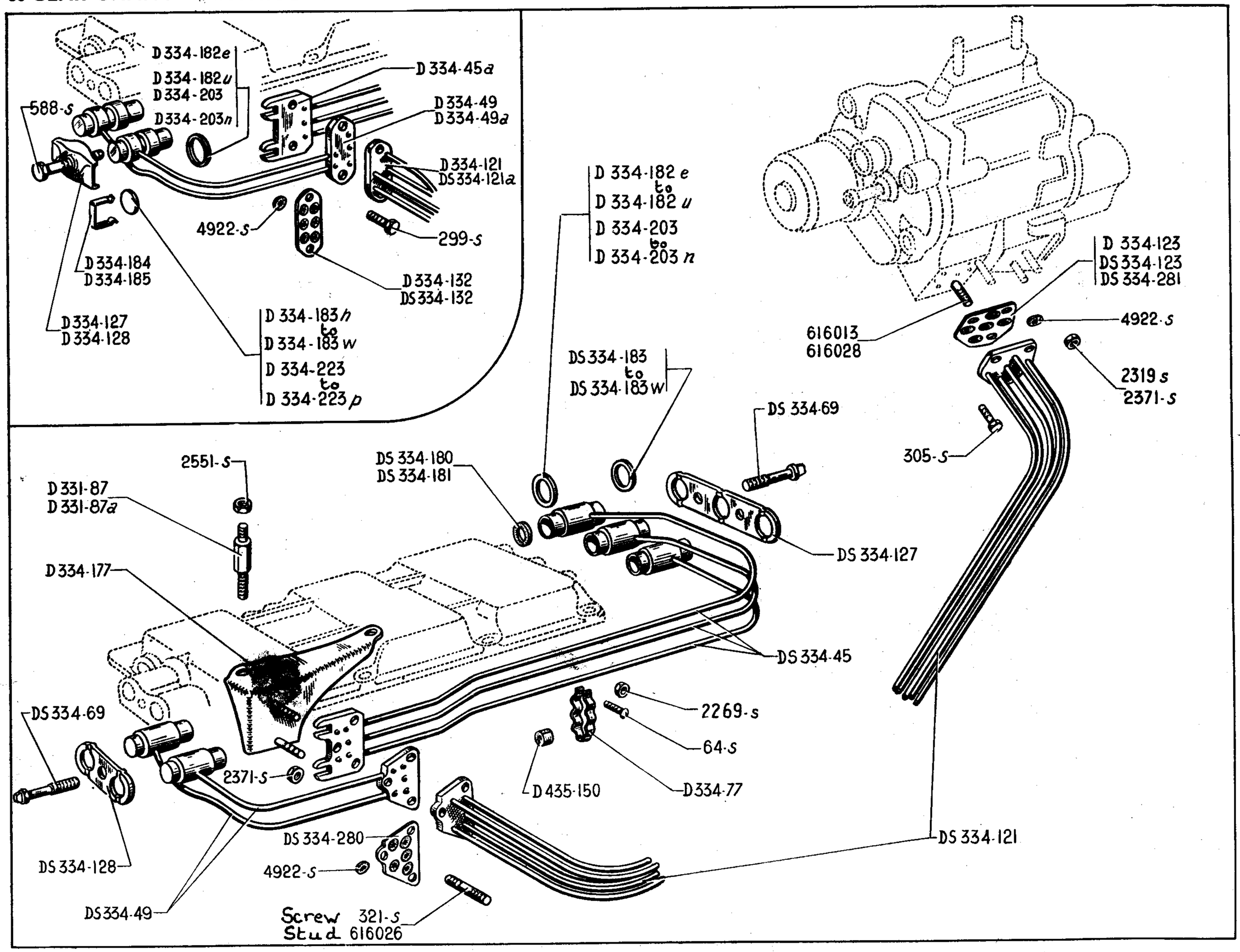
D 334-182e
D 334-182u
D 334-203
D 334-203n
588-s
D 334-45a
D 334-49
D 334-49a
D 334-121
DS 334-121a
4922-s
299-s
D 334-184
D 334-185
D 334-132
DS 334-132
D 334-127
D 334-128
D 334-183h to D 334-183w
D 334-223 to D 334-223p
D 334-182 e to D 334-182 u
D 334-203 to D 334-203 n
D 334-123
DS 334-123
DS 334-281
616013
616028
4922-s
2319 s
2371-s
DS 334-183 to DS 334-183 w
DS 334-69
305-s
2551-s
DS 334-180
DS 334-181
D 331-87
D 331-87a
DS 334-127
D 334-177
DS 334-45
2269-s
64-s
DS 334-69
2371-s
D 435-150
D 334-77
DS 334-280
DS 334-121
DS 334-128
4922-s
DS 334-49
Screw 321-s
Stud 616026

NUMBER	DESCRIPTION	No. OFF
D 331-87	Shouldered stud, securing pipe assembly bracket and gearbox bracket hexagonal, shoulder 25.5 mm. long, threaded 8 diameter 125 pitch, total length 66.5.	2
D 331-87a	Shouldered stud, securing pipe assembly bracket, cylindrical, 14 mm. diameter shoulder 28 mm. long, threaded 8 diameter 125 pitch total length 66.5 mm.	1
DS 334-45a	Pipe assembly, rear, on gearbox controlling gears (3 pipes and 3 cylinders, length from top of cylinder to shoulder 35 mm., flange fixing at 2 points). Until March1957	1
DS 334-45	Pipe assembly, rear, on gearbox, controlling gears (3 pipes and 3 cylinders length from top of cylinder to shoulder 35 mm., flange fixing at 3 points). Since March 1957.	1
D 334-49	*Pipe assembly, front, on gearbox, controlling gears (2 pipes and 2 cylinders, length from top of cylinder to shoulder 33 mm.). No longer supplied.*	1
D 334-49a	Pipe assembly, front, on gearbox, controlling gears (2 pipes and 2 cylinders, length from top of cylinder to shoulder 35 mm, flange fixing at 2 points). Until March 1957.	1
DS 334-49	Pipe assembly, front, on gearbox controlling gears (2 pipes and 2 cylinders, length from top of cylinder to shoulder 35 mm, flange fixing at 3 points). Since March 1957	1
DS 334-69	Screw, 7 diameter 48 long for securing pipe assembly flanges on gearbox. Since March 1957.	3
D 334-77	Triple clip for rear piping assembly on gearbox.	1

NUMBER	DESCRIPTION	No. OFF
D 334-121	Pipe assembly between hydraulic gear selector and gearbox (5 pipes flange fixing on gearbox at 2 points). Until March 1957.	1
DS 334-121	Pipe assembly between hydraulic gear selector and gearbox (5 pipes, flange fixing on gearbox at 3 points). Since March 1957.	1
DS 334-121a	Pipe assembly between hydraulic gear selector and gearbox (5 pipes,flange fixing; hydraulic gear selector side, 3 holes 6.5 mm. diameter; gearbox side 2 holes 5.5 mm. diameter) for replacement of hydraulic gear selector D 334-07 by DS 334-07a.	1
D 334-123	*Seal plate between pipe assembly D 334-121 and hydraulic gear selector (5 holes, 2 fixing holes 20 mm. between centres) (R. VI). Until June 1956. Replaced by DS 334-123; order in addition: 5-4. 922-S.*	1
DS 334-123	Seal plate (without joint) between pipe assembly D 334-121 and hydraulic gear selector (5 holes 7.6: 2 fixing holes 5.5 mm. diameter, 20 mm. between centres) (R.VI). June 1956 - March 1957.	1
D 334-127	Flange fixing rear pipe assembly to gearbox (2 holes 8 mm.diameter). Until March 1957.	1
DS 334-127	Flange fixing rear pipe assembly to gearbox (2 holes 8 mm. diameter; 3 holes 18) Since March 1957.	1
D 334-128	Flange fixing front pipe assembly on gearbox (1 hole 8 mm. diameter) Until March 1957.	1
DS 334-128	Flange fixing front pipe assembly on gearbox (1 hole 8 mm; 2 holes 18 mm. diameter) Since March 1957.	1
DS 334-132	*Seal plate between pipe assembly on gearbox (6 holes, 2 fixing holes 36 mm. between centres) (R. VI). Until June 1956. Replaced by DS 234-132; order in addition: 6-4.922-S.*	2

NUMBER	DESCRIPTION	No. OFF
DS 334-132	Seal plate (without joint) between pipe assembly on gearbox (6 holes 7.6; 2 fixing holes, 5.5 mm. diameter., 20 mm. between centres (R.VI). June 1956 - March 1957.	2
D 334-177	Support for pipe assembly on gearbox	1
DS 334-180	Ring seal 13.6 x 19 x 2.7 for piston controlling gears (R.VI).	
	- 3rd and 4th speed at the front of the box.	1
	- 3rd and 4th speed at the rear.	1
	- 2nd speed at the rear.	1
DS 334-181	Ring seal 10.5 x 15.9 x 2.7 for piston controlling gears (R.VI).	
	- 1st speed at the front of the box.	1
	- reverse speed at the rear.	1
	Washer for adjustment of cylinder controlling gears on gearbox 17 x 22.6:	As nec.
D 334-182e	Thickness 1.5	
D 334-182f	" 1.6	
D 334-182g	" 1.7	
D 334-182h	" 1.8	
D 334-182i	" 1.9	
D 334-182j	" 2.	
D 334-182l	" 2.2	
D 334-182m	" 2.3	
D 334-182n	" 2.4	
D 334-182p	" 2.5	
D 334-182q	" 2.6	
D 334-182r	" 2.7	
D 334-182s	" 2.8	
D 334-182t	" 2.9	
D 334-182u	" 2.1	

NUMBER	DESCRIPTION	No. OFF
	Packing washer for adjusting cylinder controlling gears on gearbox 15 mm. diameter. Until March 1957.	As nec.
D 334-183h	Thickness 1.5	
D 334-183i	" 1.6	
D 334-183j	" 1.7	
D 334-183k	" 1.8	
D 334-183l	" 1.9	
D 334-183m	" 2	
D 334-183n	" 2.1	
D 334-183p	" 2.2	
D 334-183q	" 2.3	
D 334-183r	" 2.4	
D 334-183s	" 2.5	
D 334-183t	" 2.6	
D 334-183u	" 2.7	
D 334-183v	" 2.8	
D 334-183w	" 2.9	
	Washer under flange securing pipe assembly on gearbox 18 x 22. Since March 1957.	As nec.
DS 334-183	Thickness 0.4 (R.VI).	
DS 334-183b	" 0.6 (R.VI).	
DS 334-183d	" 0.8 (R.VI).	
DS 334-183f	" 1 (R.VI).	
DS 334-183h	" 1.5	
DS 334-183j	" 1.7	
DS 334-183l	" 1.9	
DS 334-183n	" 2.1	
DS 334-183q	" 2.3	
DS 334-183s	" 2.5	
DS 334-183u	" 2.7	
DS 334-183w	" 2.9	
D 334-184	Spring clip securing packing washer for adjusting reverse speed cylinder length 20.7 mm. Until March 1957.	1

NUMBER	DESCRIPTION	No. OFF
D 334-185	Spring clip securing packing washer for adjusting 2nd and 3rd/4th speed cylinder, length 18.2 mm. Until March 1957.	2
	Washer for adjustment of cylinder controlling gears, 15.75 x 21.6:	As nec.
D 334-203	Thickness 1.5	
D 334-203d	" 1.7	
D 334-203f	" 1.9	
D 334-203g	" 2.3	
D 334-203h	" 2.7	
D 334-203j	" 3.1	
D 334-203k	" 3.5	
D 334-203l	" 3.9	
D 334-203m	" 4.3	
D 334-203n	" 4.7	
	Washer for adjusting cylinder controlling 3rd and 4th speed cylinder 17.5 mm. diameter. Until March 1957.	As nec.
D 334-223	Thickness 1.5	
D 334-223a	" 1.6	
D 334-223b	" 1.7	
D 334-223c	" 1.8	
D 334-223d	" 1.9	
D 334-223e	" 2	
D 334-223f	" 2.1	
D 334-223g	" 2.2	
D 334-223h	" 2.3	
D 334-223j	" 2.4	
D 334-223k	" 2.5	
D 334-223l	" 2.6	
D 334-223m	" 2.7	
D 334-223n	" 2.8	
D 334-223p	" 2.9	
DS 334-280	Seal plate between pipe assembly on gearbox (5 holes 7.6, 3 fixing holes 6.5 mm diameter, 19 and 38 mm between centres (R. VI). Since March 1957.	2

NUMBER	DESCRIPTION	No. OFF
DS 334-281	Seal plate between pipe assembly and hydraulic gear selector (5 holes 7.6, 3 fixing holes 6.5 mm. diameter 18.5 and 27 mm. between centres) (R.VI). Since March 1957.	1
D 435-150	Rubber sleeve under clip on rear pipe assembly for gearbox.	3
64-S	Screw, round head, 4 diameter, 12.5 long securing triple clip on rear pipe assembly for gearbox (R. III).	1
299-S	Screw, hex. head 5 diameter 28 long for assembling front and rear pipe assemblies (R.III). Until March 1957.	2
305-S	Screw, hex. head 5 diameter 18 long securing pipe assembly controlling gears, on hydraulic gear selector (R.III). Since March 1957.	1
321-S	Screw, hex. head, 6 diameter 30 long for assembling pipe assemblies on gearbox (R.III). Since March 1957.	1
588-S	Screw, hex. head 7 diameter 55 long securing pipe assembly flange on gearbox (R.III). Until March 1957.	3
2.269-S	Nut, hex. 4 diameter 75 pitch securing triple clip on pipe assembly (R.III).	1
2.319-S	Nut, hex. 5 diameter 75 pitch securing pipe assemblies (R.III). Until March 1957.	8
2.371-S	Nut, hex. 6 diameter 100 pitch securing pipe assemblies (R.III). Since March 1957.	8
2.551-S	Nut, hex. 8 diameter 125 pitch securing pipe assembly bracket (R.III).	2
4.922-S	Ring seal 4.2 x 8 x 1.9 for seal plates (R.VI).	As nec.
616.013	Stud 5 diameter 24 long (threaded 6 and 10) securing pipe assemblies on hydraulic gear selector (R. I). Until March 1957.	8
616.026	Stud 6 diameter 30 long (threaded 7 and 12) securing pipe assemblies on gearbox (R. I). Since March 1957.	2
616.028	Stud 6 diameter 25.5 long (threaded 7 and 9.5) securing pipe assemblies on hydraulic gear selector (R. I). Since March 1957.	8

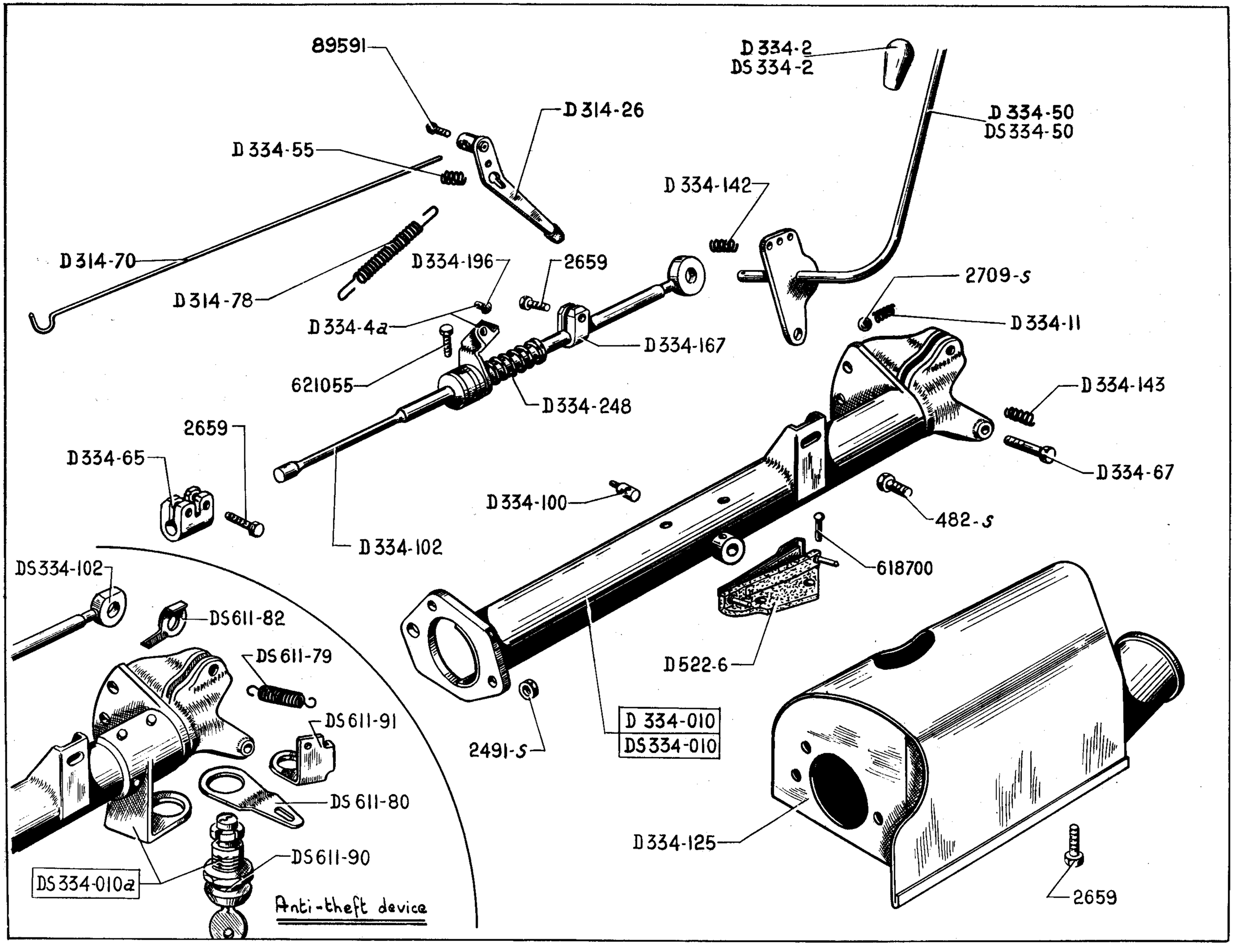
89591
D 334-2
DS 334-2
D 314-26
D 334-50
DS 334-50
D 334-55
D 334-142
D 314-70
D 334-196
2659
2709-s
D 314-78
D 334-11
D 334-4a
D 334-167
621055
D 334-143
D 334-248
2659
D 334-65
D 334-67
D 334-100
482-s
D 334-102
618700
DS 334-102
DS 611-82
DS 611-79
D 522-6
DS 611-91
D 334-010
DS 334-010
2491-s
DS 611-80
D 334-125
DS 611-90
DS 334-010a
2659
Anti-theft device

NUMBER	DESCRIPTION	No. OFF
D 314-26	Auxiliary clutch control lever.	1
D 314-70	Rod for auxiliary clutch control lever.	1
D 314-78	Return spring for auxiliary clutch control lever.	1
D 334-010	Gear selector lever complete. Until September 1961.	1
DS 334-010	Gear selector lever complete. All types September 1961 - January 1962. All types except Germany. Since January 1962.	1
DS 334-010a	Gear selector lever complete with anti-theft device. Germany. Since January 1962.	1
D 334-2	Knob, white, for selector lever, tapped 6 diameter 100 pitch (R.VI). Until September 1961.	1
DS 334-2	Knob, black, for selector lever, tapped 5 diameter 75 pitch (R.VI). Since September 1961.	1
DS 334-4a	Gate for selector with pad for starter switch.	1
D 334-11	Spring locking gears on selector (5.9 mm. diameter wire diameter 0.9 mm).	2
D 334-50	Gear selector lever with positioning quadrant, threaded 6 diameter 100 pitch. Until September 1961.	1
DS 334-50	Gear selector lever with positioning quadrant, threaded 5 diameter 75 pitch. Since September 1961.	2

NUMBER	DESCRIPTION	No. OFF
D 334-55	Thrust spring for auxiliary clutch control lever.	1
D 334-65	Coupling sleeve between selector lever and hydraulic gear selector.	1
D 334-67	Pin for positioning selector quadrant.	1
D 334-100	Pin for positioning selector gate.	1
D 334-102	Connecting rod between selector lever and hydraulic gear selector. All types. Until January 1962. All types except Germany. Since January 1962.	1
DS 334-102	Connecting rod between selector lever and hydraulic gear selector (anti-theft device). Allemagne. Since January 1962.	1
D 334-125	Support for hydraulic gear selector and change speed control.	1
D 334-142	Thrust spring for connecting rod.	1
D 334-143	Thrust spring for positioning quadrant.	1
D 334-167	Clamp on connecting rod.	1
D 334-196	Insulating pad (nylon) for starter switch (R. VI).	1
D 334-248	Spring locating neutral position for reverse speed.	1
D 522-6	Starter motor switch (R. VI).	1
DS 611-79	Return spring for anti-theft bolt (12 x 51) (R. VI). Germany. Since January 1962.	1

NUMBER	DESCRIPTION	No. OFF
DS 611-80	Distance plate for anti-theft lock and steering column bracket (R.VI). Germany. Since January 1962.	1
DS 611-82	Safety lever on change speed lever (R.VI). Germany. Since January 1962.	1
DS 611-90	Lock barrel with keys and locking nuts. Anti-theft (R.VI). Germany. Since January 1962.	1
DS 611-91	Anti-theft bolt (R.VI). Germany. Since January 1962.	1
482-S	Screw, hex. head 7 diameter 12.5 long securing selector (R.III).	2
2.491-S	Nut, hex. 7 diameter 100 pitch for coupling selector and hydraulic gear selector (R.III).	2
2.659	Screw, hex. head 5 diameter 75 pitch 13 mm. long (R.III).	
	- tightening coupling sleeve	2
	- securing support for hydraulic gear selector.	2
	- tightening clamp on connecting rod	1
2.709-S	Locking ball for change speed lever (R.VI).	2
89.591	Screw tightening control rod on auxiliary clutch control lever (R.III)	1
618.700	Rivet securing starter switch (R.III).	2
621.055	Screw, hex. head 5 diameter 75 pitch length 11, securing selector gate (R.I).	1

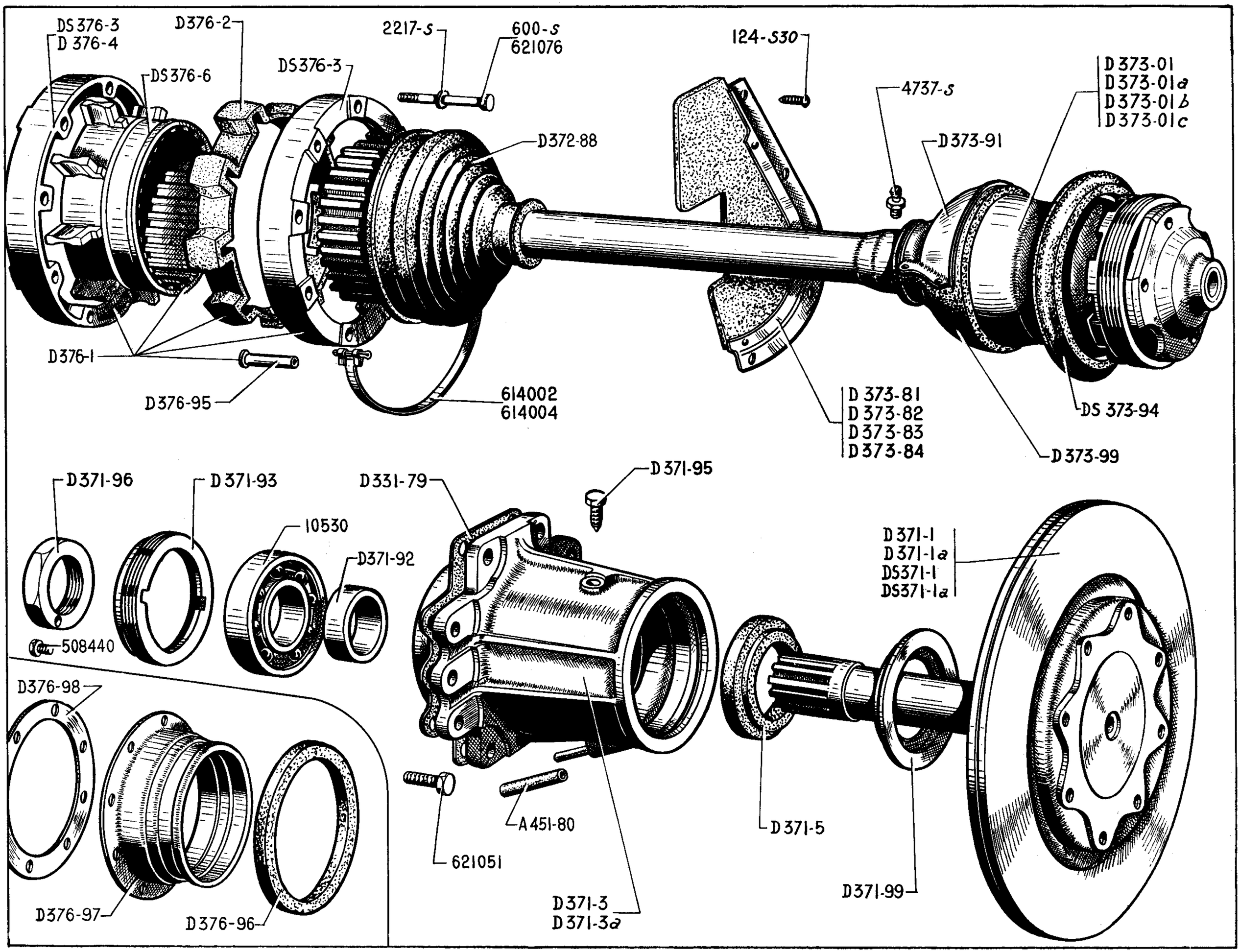
DS 376-3
D 376-4
D376-2
DS376-6
DS376-3
2217-S
600-S
621076
124-S30
4737-S
D372-88
D 373-01
D 373-01a
D 373-01b
D 373-01c
D373-91
D376-1
D376-95
614002
614004
D 373-81
D 373-82
D 373-83
D 373-84
DS 373-94
D 373-99
D371-96
D 371-93
D331-79
D 371-95
10530
D371-92
508440
D 371-1
D 371-1a
DS371-1
DS371-1a
D376-98
A451-80
D 371-5
621051
D371-99
D376-97
D376-96
D 371-3
D 371-3a

NUMBER	DESCRIPTION	No. OFF
A 451-80	Flexible pipe 5 x 7 x 185 for oil outlet on differential shaft housing.	2
D 331-79	Joint for differential shaft housing (R.VI).	2
D 371-1	Differential shaft, left hand with brake friction disc, lenfth of shaft 2.02 mm. Until October 1961.	1
D 371-1a	Differential shaft, right hand with brake friction disc, length of shaft, 192 mm. Until October 1961.	1
DS 371-1	Differential shaft, left hand with brake friction disc, 8 holes 9 mm. diameter, length of shaft 202 mm. Since October 1961.	1
DS 371-1a	Differential shaft, right hand with brake friction disc, 8 holes 9 mm. diameter, length of shaft 102 mm. Since October 1961.	1
D 371-3	Housing for differential shaft, left-hand, length 145.5 mm.	1
D 371-3a	Housing for differential shaft, right-hand, length 135.5 mm.	1
D 371-5	Sealing ring for differential shaft bearing 39 x 65 x 10 (R.VI).	2
D 371-92	Thrust sleeve for differential shaft bearing 30.2 x 38 x 10.	2
D 371-93	Ring nut, male 74 diameter 150 pitch locking bearing on differential shaft housing.	2

NUMBER	DESCRIPTION	No. OFF
D 371-95	Screw, 7 diameter 100 pitch, securing ring nut locking bearing on differential shaft housing.	2
D 371-96	Nut, hex. 30 diameter 150 pitch on differential shaft.	2
D 371-99	Oil retaining washer on differential shaft 37 x71.5 (R.VI).	2
D 372-88	Dust shield on driveshaft (gearbox side) internal diameter 26 and 111 mm.	2
D 373-01	*Driveshaft complete, front, left-hand. Until February 1956. No longer supplied.*	1
D 373-01a	*Driveshaft complete, front, right-hand. Until February 1956. No longer supplied.*	1
D 373-01b	Driveshaft complete, front, left-hand (without driving dowels on plate). Since February 1956.	1
D 373-01c	Driveshaft complete, front, right-hand (without driving dowels on plate). Since February 1956.	1
D 373-81	Shield for driveshaft opening, rear, right-hand (sidemember opening). Until November 1958.	1
D 373-82	Shield for driveshaft opening, rear, left-hand (sidemember opening). Until November 1958.	1
D 373-83	Shield for driveshaft opening, front, right-hand (sidemember opening). Until November 1958.	1
D 373-84	Shield for driveshaft opening, front, left-hand (sidemember opening). Until November 1958.	1

NUMBER	DESCRIPTION	No. OFF
D 373-91	Half cover retaining rubber cover on driveshaft.	4
DS 373-94	Driveshaft sealing joint 108 x 118 x 16 (R.VI).	2
D 373-99	Rubber cover on driveshaft, internal diameter 40 mm. and 103 mm.	2
D 376-1	Driving sleeve, female with flexible coupling, 30 splines. Until October 1961.	2
D 376-2	Flexible drive block, external diameter 149 mm.	2
DS 376-3	Driving plate, female (differential and wheelside) 8 holes 9 mm. diameter. Since October 1961.	4
D 376-4	Driving plate, female (differential side, external diameter 164 mm). 8 holes 7 mm. diameter. Until October 1961.	2
DS 376-6	Driving hub, only with cup.	2
D 376-95	Sleeve for assembling driving plates, 10 mm. diameter. Until October 1961.	8
D 376-96	Rubber ring 112.5 x 121 x 13 on driving sleeve. Until June 1957.	2
D 376-97	Housing for dust cover on driving sleeve 109 x 160 x 47. Until June 1957.	2
D 376-98	Washer 116 x 160 x 1 for rubber ring on driving sleeve. Until June 1957.	2

NUMBER	DESCRIPTION	No. OFF
124-S-30	Screw, round head, 5 diameter 12.5 long securing driveshaft shields (R.III). Until November 1958.	1
600-S	Screw, hex. head 7 diameter 70 long securing driving sleeve (R.III). Until October 1961.	16
2.217-S	Washer 9.5 x 16 x 2 securing driving sleeve (R. III). Since October 1961.	16

NUMBER	DESCRIPTION	No. OFF
4.737-S	Greaser for driveshaft (R.VI).	2
10.530	Bearing 30 x 72 x 19 for differential shaft (R.VI).	2
508.440	Screw, hex. head 6 diameter 11 long securing differential shaft nut (R.I).	2
614.002	Clip for dust shield on driveshaft 220 mm. long (R.VI).	2

NUMBER	DESCRIPTION	No. OFF
614.004	Clip for dust shield on driving sleeve 765 mm. long (R.VI).	2
621.051	Screw, hex. head 7 diameter 22.5 long securing differential shaft housing (R.II).	8
621.076	Screw, 9 diameter 75 long securing driving sleeve (R.II). Since October 1961.	16

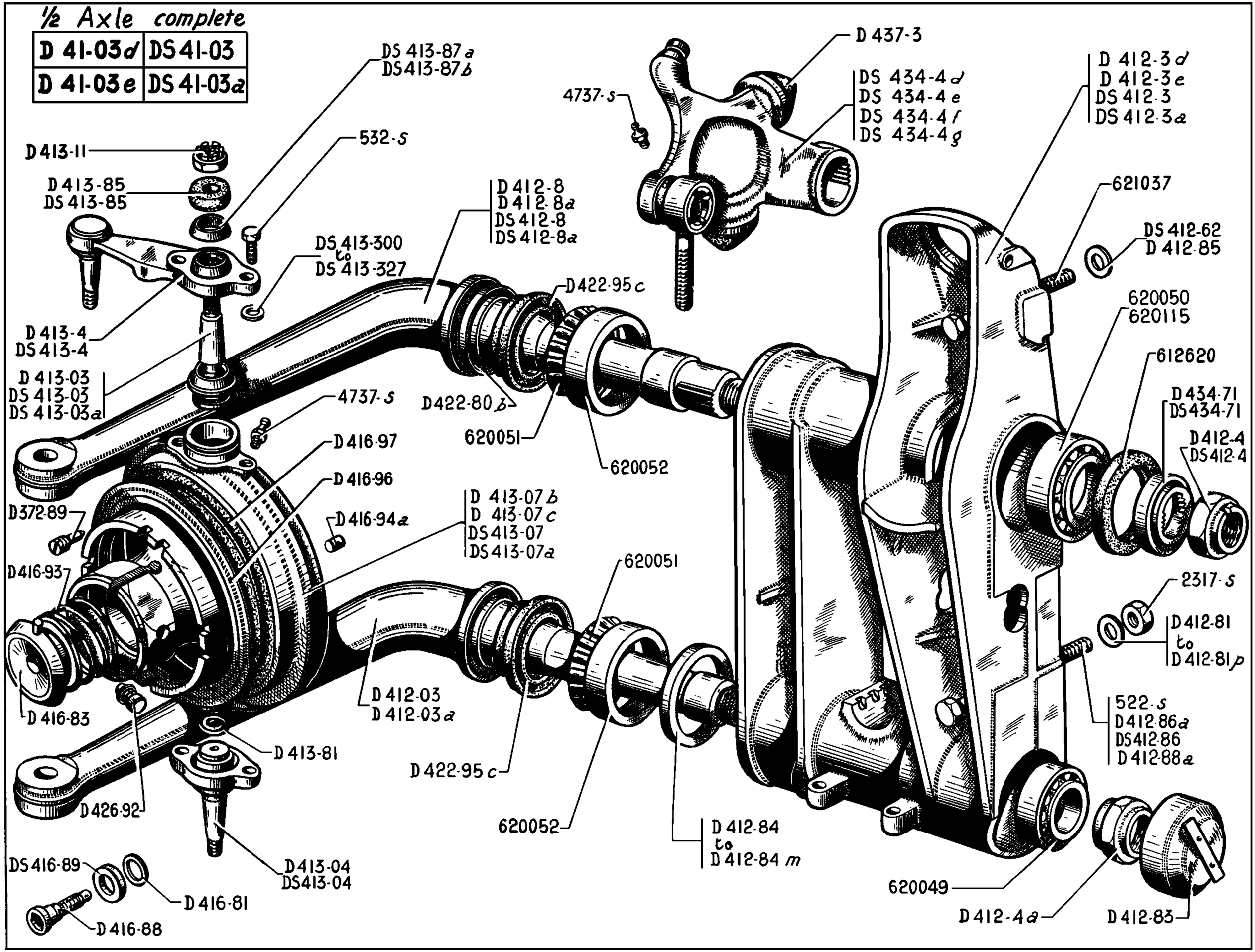
½ Axle complete
D 41-03d
DS 41-03
D 41-03e
DS 41-03a
D 413-11
D 413-85
DS 413-85
D 413-4
DS 413-4
D 413-03
DS 413-03
DS 413-03a
D 372-89
D 416-93
D 416-83
D 426-92
DS 416-89
D 416-88
D 416-81
D 413-04
DS 413-04
D 413-81
4737-s
D 416-97
D 416-96
D 416-94a
532-s
DS 413-87a
DS 413-87b
DS 413-300
to
DS 413-327
D 412-8
D 412-8a
DS 412-8
DS 412-8a
D 422-80b
620051
D 422-95c
620052
D 413-07b
D 413-07c
DS 413-07
DS 413-07a
620051
D 412-03
D 412-03a
D 422-95c
620052
D 412-84
to
D 412-84m
4737-s
D 437-3
DS 434-4d
DS 434-4e
DS 434-4f
DS 434-4g
D 412-3d
D 412-3e
DS 412-3
DS 412-3a
621037
DS 412-62
D 412-85
620050
620115
612620
D 434-71
DS 434-71
D 412-4
DS 412-4
2317-s
D 412-81
to
D 412-81p
522-s
D 412-86a
DS 412-86
D 412-88a
620049
D 412-4a
D 412-83

NUMBER	DESCRIPTION	No. OFF
D 41-03d	*Half-axle, front, left-hand (without swivel or driveshaft). October 1956 – March 1960. Replaced by DS 41-03a. For type fitted before October 1956; order in addition: 1-DS 412-62 (R. VI).*	1
D 41-03e	*Half-axle, front, right-hand (without swivel or driveshaft). October 1956 – March 1960. Replaced by DS 41-03a. For type fitted before October 1956; order in addition: 1-DS 412-62 (R. VI).*	1
DS 41-03	Half axle, front, left-hand (upper arm bore for bearing 40 mm. diameter). Since March 1960.	1
DS 41-03a	Half axle, front, right-hand (upper arm bore for bearing 40 mm. diameter). Since March 1960.	1
D 372-89	Screw with dowel 7 diameter 100 pitch 18.8 mm. long, locking stub axle nut.	2
D 412-03	Lower arm, front left-hand, seating for bearing 30 mm. diameter.	1
D 412-03a	Lower arm, front right hand, seating for bearing 30 mm. diameter.	1
D 412-3d	Bracket for front link arms, left-hand. October 1956 - March 1960. Replaces earlier type by ordering in addition, 1-DS 412-62 (R.VI).	1
D 412-3e	Bracket for front link arms, right-hand. October 1956 - March 1960. Replaces earlier type by ordering in addition 1-DS 412-62 (R.VI).	1
DS 412-3	Bracket for front link arms, left-hand (for upper arm arrangement with 40 mm. seating for bearing). Since March 1960.	1
DS 412-3a	Bracket for front link arms, right-hand (for upper arm arrangement with 40 mm. seating for bearing). Since March 1960.	1
D 412-4	Nut, hex. 27 diameter 150 pitch locking upper front link arm, 16.5 mm. thick. Until March 1960.	2
D 412-4a	Nut, hex. 27 diameter 150 pitch locking lower front link arm, 22.6 mm. thick.	2
DS 412-4	Nut, hex. 27 diameter 150 pitch (46 across flats) locking upper link arm. Since March 1960.	2
D 412-8	Upper link arm, front, left-hand, seating for bearing 35 mm. diameter. Until March 1960.	1
D 412-8a	Upper link arm, front, right-hand, seating for bearing 35 mm. diameter. Until March 1960.	1
DS 412-8	Upper link arm, front, left-hand (seating for bearing 40 mm. diameter). Since March 1960.	1
DS 412-8a	Upper link arm, front, right-hand (seating for bearing 40 mm. diameter). Since March 1960.	1
DS 412-62	Distance washer 17 x 28 x 3 for mounting brackets D 412-3d and D 412-3e in place of earlier type brackets (R.VI). Since October 1956.	2
	Thrust washer, lower 14.5 x 28 for link arm bracket. Until April 1958.	As nec.
D 412-81	Thickness 1.75	
D 412-81a	" 1.80	
D 412-81b	" 1.85	
D 412-81c	" 1.90	
D 412-81d	" 1.95	
D 412-81e	Thickness 2	
D 412-81f	" 2.05	
D 412-81g	" 2.10	
D 412-81h	" 2.15	
D 412-81j	" 2.20	
D 412-81k	" 2.25	
D 412-81l	" 2.30	
D 412-81m	" 2.35	
D 412-81n	" 2.40	
D 412-81p	" 2.45	
D 412-83	Metal cap for lower arm bearing external diameter 62.1 mm.	2
	Washer for adjusting caster angle on lower arm 60 x 71.5.	As nec.
D 412-84	Thickness 4.6	
D 412-84a	" 4.8	
D 412-84b	" 5	
D 412-84c	" 5.2	
D 412-84d	" 5.4	
D 412-84e	" 5.6	
D 412-84f	" 5.8	
D 412-84g	" 6	
D 412-84h	" 6.2	
D 412-84j	" 6.4	
D 412-84k	" 6.6	
D 412-84l	" 6.8	
D 412-84m	" 7	
D 412-85	Washer 12 mm. diameter for upper fixing screw of swivel arm bracket.	2

NUMBER	DESCRIPTION	No. OFF
D 412-86a	Screw, round head, 14 diameter 150 pitch, 104 mm long for lower rear securing point of swivel arm bracket. Until October 1959.	2
DS 412-86	Screw, round head, splined 14 diameter 150 pitch 98 mm long for lower rear securing point of swivel arm bracket. Since October 1959.	2
D 412-88a	Screw, hex. head 14 diameter 150 pitch 78.5 mm long for lower front securing point of swivel arm bracket.	2
D 413-03	*Ball pin assembly, upper for swivel with seating, bush and washers. Until October 1959. Replaced by DS 413-03a; order in addition: 1-DS 413-4, 1-DS 413-85. 1-DS 413-87 (R. VI).*	2
DS 413-03	Ball pin assembly, upper for swivel (with 2 seats). Since October 1959.	2
DS 413-03a	Ball pin assembly, upper for swivel (2 seats, 1 distance piece). For replacement of D 413-03.	2
D 413-04	*Ball pin assembly, lower for swivel with seat and swivelling flange. Until May 1961. Replaced by DS 413-04.*	2
DS 413-04	Ball pin assembly, lower for swivel, with seat (36.3 mm diameter) and swivelling flange. Since May 1961.	2
D 413-07b	*Swivel, front, left-hand, with hub and bearings, threaded 118 diameter × 150 right-hand pitch (with driving dowels on hub). February 1956 – October 1959. Replaces previous type (remove centring dowel). Replaced by DS 413-07; order in addition: 1-DS 413-85, 1-DS 413-87a (R. VI).*	1
D 413-07c	*Swivel, right-hand, with hub and bearings, threaded 118 diameter × 150 left-hand pitch (with driving dowels on hub). February 1956 – October 1959. Replaces previous type (remove centring dowel). Replaced by DS 413-07a; order in addition: 1-DS 413-85, 1-DS 413-87a (R. VI).*	1
DS 413-07	Swivel, left-hand (with coupling lever, flange 22 mm thick). October 1959 - June 1962.	1
DS 413-07a	Swivel, right-hand (with coupling lever, flange 22 mm thick). October 1959 - June 1962.	1
DS 413-07b	Swivel, left-hand, with hub (greaser for lower ball pin). Since June 1962.	1
DS 413-07c	Swivel, right-hand, with hub (greaser for lower ball pin). Since June 1962.	1
D 413-4	*Coupling lever on swivel, 105 mm. between centres, with ball pin. Until October 1959. Replaced by DS 413-4; order in addition: 1-DS 413-85. 1-DS 413-87a (R. VI).*	2
DS 413-4	Coupling lever on swivel with ball pin (thickness of flange 22 mm). Since October 1959.	2
D 413-11	Nut, hex., castellated, 16 diameter x 150 pitch for swivel ball pin (R. VI).	4
D 413-81	Spring for lower swivel ball pin, external diameter 25.5 mm.	2
D 413-85	Rubber buffer for upper and lower swivel ball pin, internal diameter 21.5, thickness 13 mm.	4
	- lower. Since October 1959.	2
DS 413-85	Rubber buffer for upper swivel ball pin, internal diameter 21.5 mm, thickness 10.5 mm. Since October 1959.	2
DS 413-87a	Cup, upper for swivel, 9 mm thick (R. VI). Since October 1959.	2
DS 413-87b	Cup, upper and lower for swivel, front (R. VI).	4
	- lower. Since October 1959.	2
	Washers for adjustment of upper and lower ball pins 9.5 x 14.5.	As nec.
DS 413-300	Thickness 1.23.	
DS 413-301	" 1.27.	
DS 413-302	" 1.31.	
DS 413-303	" 1.35.	
DS 413-304	" 1.39.	
DS 413-305	" 1.43.	
DS 413-306	" 1.47.	
DS 413-307	" 1.51.	
DS 413-308	" 1.55.	
DS 413-309	" 1.59.	
DS 413-310	" 1.63.	
DS 413-311	" 1.67.	
DS 413-312	" 1.71.	
DS 413-313	" 1.75.	
DS 413-314	" 1.79.	
DS 413-315	" 1.83.	
DS 413-316	" 1.87	
DS 413-317	" 1.91.	
DS 413-318	" 1.95.	
DS 413-319	" 1.99.	
DS 413-320	" 2.03.	
DS 413-321	" 2.07.	
DS 413-322	" 2.11.	

The numbers underlined indicate new parts and do not appear on the illustrations.

NUMBER	DESCRIPTION	No. OFF
DS 413-323	Thickness 2.15.	
DS 413-324	" 2.19.	
DS 413-325	" 2.23.	
DS 413-326	" 2.27.	
DS 413-327	" 2.31.	
D 416-81	Washer 21 x 30 x 3 for screw retaining wheel (R. VI).	2
D 416-83	Cone for locking wheel on hub, threaded 18 diameter 150 pitch (R. VI).	2
D 416-88	Screw securing wheel, threaded 18 diameter 150 pitch 63 mm long (R. VI).	2
DS 416-89	Thrust washer 23.5 x 44 x 6.4 for screw securing wheel (R. VI).	2
D 416-93	Spring for cone locking wheel on hub. External diameter 59 mm.	2
D 416-94a	Dowel pin for centring swivel 9.93 x 12.5.	8
D 416-96	Deflector for sealing ring on swivel 127 x 168.	4
D 416-97	Ring seal for swivel 129 x 164 x 13 (R. VI). Until September 1962.	4
DM 416-97	Ring seal on front swivel 129 x 164 x 13, with rubber lip (R. VI). Since September 1962.	4
D 422-80b	Cup for sealing ring on arm.	4

NUMBER	DESCRIPTION	No. OFF
D 422-95c	Oil seal on upper and lower arm (54 x 72 x 12.5) (R. VI).	4
D 426-92	Stud for positioning wheel (R. VI).	2
DS 434-4d	Lever controlling front suspension, left hand, with greaser (splines 38 mm). Since March 1960.	1
DS 434-4e	Lever controlling front suspension, right hand, with greaser (splines 38 mm). Since March 1960.	1
DS 434-4f	Lever controlling front suspension, left hand, with greaser. March 1957 - March 1960. Replaces previous type (delete thrust plate on bracket).	1
DS 434-4g	Lever controlling front suspension, right hand with greaser. March 1957 - March 1960. Replaces previous type (delete thrust plate on bracket).	1
D 434-71	Distance piece for suspension lever on upper arm 32.1 x 54 x 10.25 (R. VI). Until March 1960.	2
DS 434-71	Distance piece for suspension lever on upper arm 38 x 54 x 10.25. Since March 1960.	2
D 437-3	Rubber rebound buffer for front arm 54.5 mm diameter 23 mm high.	4

NUMBER	DESCRIPTION	No. OFF
522-S	Screw, hex. head, 14 diameter x 150 pitch, length 65 mm securing centre of link arm bracket (R. III).	4
532-S	Screw, hex. head, 9 diameter x 125 pitch, 28 mm long, securing coupling lever on swivelling flange (R. III).	8
2.317-S	Nut, hex., 14 diameter x 150 pitch, for lower securing point of link arm bracket (R. III).	2
4.737-S	Greaser on swivel (R. VI).	2
	- for lever controlling suspension. Since June 1961.	2
	- for lower swivelling pivot. Since June 1962.	2
612.620	Oil seal upper link arm (54 x 72 x 5) (R. VI).	2
620.049	Bearing for lower arm (30 x 62 x 21.5) (R. VI).	2
620.050	Bearing for upper arm (35 x 72 x 24.5) (R. VI). Until March 1960.	2
620.051	Cage with 14 taper rollers for upper and lower link arms (R. VI).	4
620.052	Outer ring for taper roller bearings on upper and lower swivel arms (19 x 72) (R. VI).	4
620.115	Bearing for upper arm 40 x 72 x 21.25 (R. VI). Since March 1960.	2
621.037	Screw, 12 diameter x 125 pitch, 89 mm long, for upper fixing of swivel arm bracket (R. II).	2

The numbers underlined indicate new parts and do not appear on the illustrations.

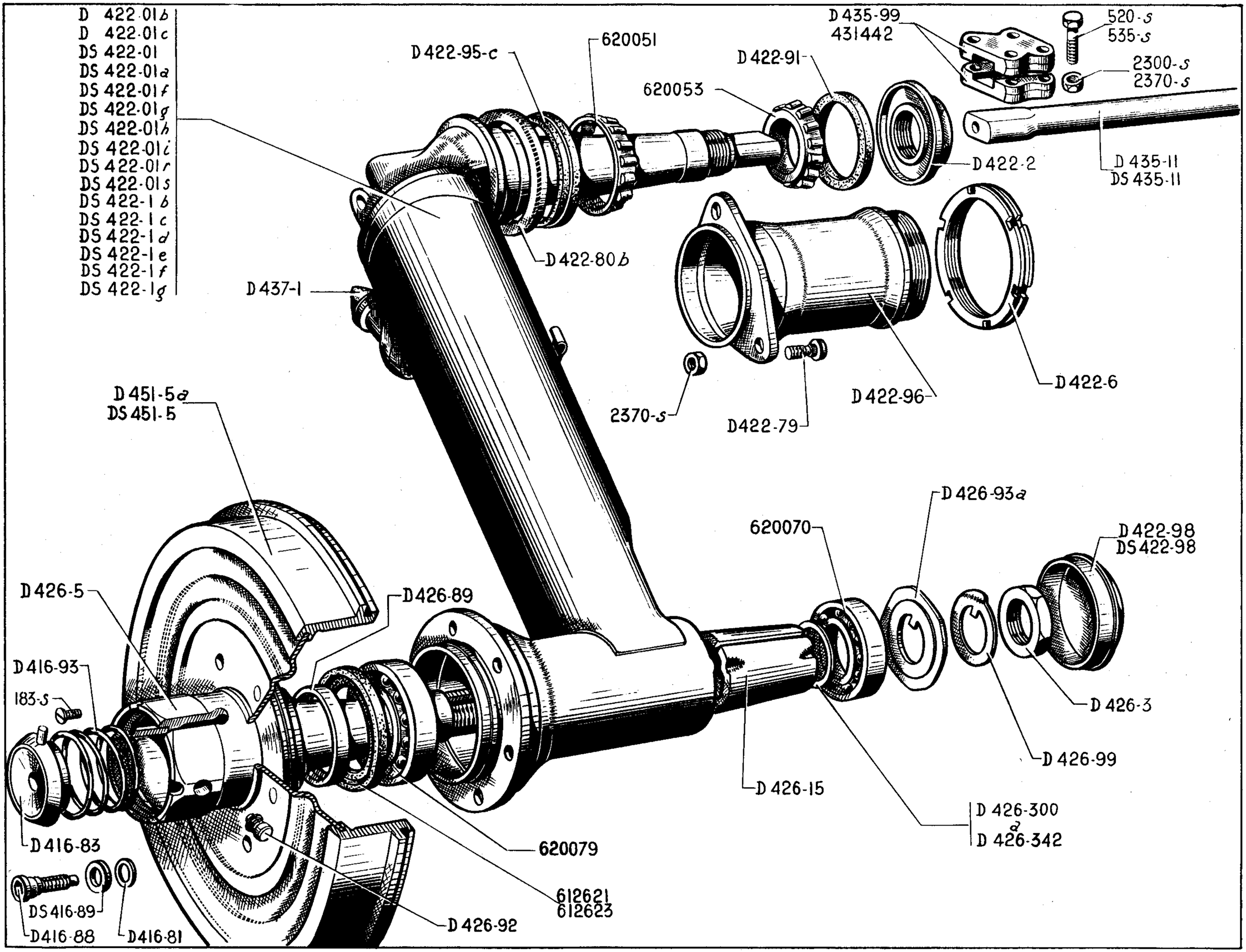
D 422-01b
D 422-01c
DS 422-01
DS 422-01a
DS 422-01f
DS 422-01g
DS 422-01h
DS 422-01i
DS 422-01r
DS 422-01s
DS 422-1b
DS 422-1c
DS 422-1d
DS 422-1e
DS 422-1f
DS 422-1g
D 422-95-c
620051
D 435-99
431442
520-s
535-s
D 422-91
2300-s
2370-s
620053
D 422-2
D 435-11
DS 435-11
D 422-80b
D 437-1
D 422-6
D 422-96
2370-s
D 422-79
D 451-5a
DS 451-5
D 426-93a
620070
D 422-98
DS 422-98
D 426-5
D 426-89
D 416-93
183-s
D 426-3
D 426-99
D 426-15
D 426-300
a
D 426-342
D 416-83
620079
612621
612623
DS 416-89
D 426-92
D 416-88
D 416-81

NUMBER	DESCRIPTION	No. OFF
D 416-81	Washer, 21 x 30 x 3, retaining wheel fixing screw (R. VI).	2
D 416-83	Cone, locking wheel on hub, threaded 18 diameter x 150 pitch (R. VI).	2
D 416-88	Screw, securing wheel, threaded 18 diameter x 150 pitch, 63 mm long (R. VI).	2
DS 416-89	Washer, 23.5 x 44 x 6.4, for wheel securing screw (R. VI).	2
D 416-93	Spring for cone locking wheel on hub.	2
D 422-01b	Rear link arm, left-hand, complete with brake (arrangement for 16 mm diameter anti-roll bar). Until December 1957.	1
D 422-01c	Rear link arm, right-hand, complete with brake (arrangement for 16 mm diameter anti-roll bar). Until December 1957.	1
DS 422-01	Rear link arm, left-hand, complete with brake (arrangement for 16 mm diameter anti-roll bar and bonded brake lining). December 1957 - February 1958.	1
DS 422-01a	Rear link arm, right-hand, complete with brake (arrangement for 16 mm diameter anti-roll bar and bonded brake lining). December 1957 - February 1958.	1
DS 422-01f	Rear link arm, left-hand, complete with brake (suspension cylinder ball 15.875 mm diameter). New position for flat anti-roll bar. Since May 1960.	1
DS 422-01g	Rear link arm, right-hand, complete (same characteristics as DS 422-01f). Since May 1960.	1

NUMBER	DESCRIPTION	No. OFF
DS 422-01h	Rear link arm, left-hand, complete with brake (arrangement for 17 mm diameter anti-roll bar). Suspension cylinder ball 15.875 mm diameter. Replaces type fitted from February 1958 to May 1960; order in addition: 1-DS 434-3, 1-4.108-S (R. VI).	1
DS 422-01i	Rear link arm, right-hand, complete (same characteristics as DS 422-01h). Replaces type fitted from February 1958 to May 1960; order in addition: 1-DS 434-3, 1-4.108-S (R. VI).	1
DS 422-01r	Rear link arm, left-hand, complete with brake and swivelling bearing (2 white marks) Cabriolet.	1
DS 422-01s	Rear link arm, right-hand, complete with brake and swivelling bearing (2 white marks) Cabriolet.	1
DS 422-1b	Rear link arm, only, left-hand (suspension cylinder ball 15.875 mm diameter). New position for flat anti-roll bar. Since May 1960.	1
DS 422-1c	Rear link arm, only, right-hand (same characteristics as DS 422-1b). Since May 1960.	1
DS 422-1d	Rear link arm, left-hand (arrangement for 17 mm diameter anti-roll bar). Suspension cylinder ball 15.875 mm diameter. Replaces type fitted from February 1958 to May 1960; order in addition: 1-DS 422-98, 1-DS 434-3, 1-4.108 (R. VI), 1-612.623 (R. VI).	1
DS 422-1e	Rear link arm, right-hand (same characteristics as DS 422-1d). Replaces type fitted from February 1958 to May 1960; order in addition: 1-DS 422-98, 1-DS 434-3, 1-4.108-S (R. VI), 1-612.623 (R. VI).	1

NUMBER	DESCRIPTION	No. OFF
DS 422-1f	Rear link arm, only, left-hand (arrangement for 16 mm diameter anti-roll bar). Suspension cylinder ball 15.875 mm diameter. Replaces type fitted up to February 1958; order in addition: 1-D 422-98, 1-DS 434-3, 1-4.108-S (R. VI), 1-612.623 (R. VI).	1
DS 422-1g	Rear link arm, only, right-hand (same characteristics as DS 422-1f). Replaces type fitted up to February 1958; order in addition: 1-DS 422-98, 1-DS 434-3, 1-4.108-S (R. VI), 1-612.623 (R. VI).	1
D 422-2	Nut, hex., 30 diameter x 150 pitch, with cup for bearing shaft on rear arm.	2
D 422-6	Ring nut, castellated, 6 slots, 66 diameter x 150 pitch, securing link arm (inner end).	2
D 422-79	Screw, round head, 9 diameter x 22 long, securing bearing housing.	6
D 422-80b	Cup for bearing housing sealing ring.	2
D 422-91	Rubber sealing ring, 54 x 62 x 4, for bearing housing.	2
D 422-95c	Sealing ring, 54 x 72 x 12.5, for bearing housing (outer end) (R. VI).	2
D 422-96	Bearing housing for link arm (diameter of body 66 mm).	2
D 422-98	Cap for rear stub axle bearing, 62 mm diameter. Until May 1960.	2
DS 422-98	Cap for rear stub axle bearing, 63 mm diameter. Since May 1960.	2
D 426-3	Nut, hex., 25 diameter x 150 pitch, securing rear stub axle.	2

NUMBER	DESCRIPTION	No. OFF
D 426-5	Stub axle, rear with centring dowels.	2
D 426-15	Distance piece, tapered for stub axle bearing, length 72.78 mm.	2
D 426-89	Spacer ring for stub axle bearing, 40.25 x 58 x 10 (drum side).	2
D 426-92	Dowel for positioning wheel (R. VI).	2
D 426-93a	Thrust washer for stub axle bearing 25 x 58 x 3.5 (inner side).	2
D 426-99	Lockwasher, 25 mm diameter for nut securing rear stub axle.	2
	Washer for adjusting bearing on rear stub axle, 25.1 x 31.8 (R. VI).	As nec.
D 426-300	Thickness 1.98 to 2.02	
D 426-301	" 2.02 to 2.06	
D 426-302	" 2.06 to 2.10	
D 426-303	" 2.10 to 2.14	
D 426-304	" 2.14 to 2.18	
D 426-305	" 2.18 to 2.22	
D 426-306	" 2.22 to 2.26	
D 426-307	" 2.26 to 2.30	
D 426-308	" 2.30 to 2.34	
D 426-309	" 2.34 to 2.38	
D 426-310	" 2.38 to 2.42	
D 426-311	" 2.42 to 2.46	
D 426-312	" 2.46 to 2.50	
D 426-313	" 2.50 to 2.54	
D 426-314	" 2.54 to 2.58	
D 426-315	" 2.58 to 2.62	
D 426-316	" 2.62 to 2.66	
D 426-317	" 2.66 to 2.70	
D 426-318	" 2.70 to 2.74	
D 426-319	" 2.74 to 2.78	
D 426-320	" 2.78 to 2.82	

NUMBER	DESCRIPTION	No. OFF
D 426-321	Thickness 2.82 to 2.86	
D 426-322	" 2.86 to 2.90	
D 426-323	" 2.90 to 2.94	
D 426-324	" 2.94 to 2.98	
D 426-325	" 2.98 to 3.02	
D 426-326	" 3.02 to 3.06	
D 426-327	" 3.06 to 3.10	
D 426-328	" 3.10 to 3.14	
D 426-329	" 3.14 to 3.18	
D 426-330	" 3.18 to 3.22	
D 426-331	" 3.22 to 3.26	
D 426-332	" 3.26 to 3.30	
D 426-333	" 3.30 to 3.34	
D 426-334	" 3.34 to 3.38	
D 426-335	" 3.38 to 3.42	
D 426-336	" 3.42 to 3.46	
D 426-337	" 3.46 to 3.50	
D 426-338	" 3.50 to 3.54	
D 426-339	" 3.54 to 3.58	
D 426-340	" 3.58 to 3.62	
D 426-341	" 3.62 to 3.66	
D 426-342	" 3.66 to 3.70	
D 435-11	Torsion anti-roll bar, rear, 16 mm diameter x 481 mm long. Until February 1958.	1
DS 435-11	Torsion anti-roll bar, 17 mm diameter. Since February 1958.	1
D 435-99	Clamp for rear torsion bar, 22 and 33 between centres. Until February 1958.	4
D 437-1	Rebounded buffer (rubber), 48.5 mm diameter, height 35 mm.	4
D 451-5a	Brake drum, rear, internal diameter 255 mm. Until December 1957.	2
DS 451-5	Brake drum, rear, two external webs. Since December 1957.	2

NUMBER	DESCRIPTION	No. OFF
183-S	Screw, countersunk head, 5 diameter x 10 long, securing rear brake drum (R. III).	4
520-S	Screw, 9 diameter x 38 long, securing clamp on torsion bar (R. III). Until February 1958.	8
535-S	Screw, hex. head, 12 diameter x 55 long, securing clamp on torsion bar (R. III). Since February 1958.	8
2.300-S	Nut, hex., 12 diameter x 125 pitch, securing clamp on torsion bar (R. III). Since February 1958.	8
2.370-S	Nut, hex., 9 diameter x 125 pitch (R. III) securing:-	
	- link arm (outer end).	6
	- clamp for torsion bar.	8
	Until February 1958.	
431.442	Clamp on torsion bar, hole centres 29 and 42 (R. II). Since February 1958.	4
612.621	Oil seal, 58 x 80 x 5, on rear stub axle (R. VI). Until May 1960.	2
612.623	Oil seal, 58 x 81.2 x 5, on rear stub axle (R. VI). Since May 1960.	2
620.051	Cage with 14 taper roller bearings on link arm (outer side) (R. VI).	2
620.053	Taper roller bearing (without outer ring) internal diameter 30 mm on link arm (inner side) (R. VI).	2
620.070	Thrust bearing on stub axle (inner end) (25 x 62 x 17) (R. II).	2
620.079	Thrust bearing on stub axle (drum end) (40 x 80 x 18) (R. II).	2

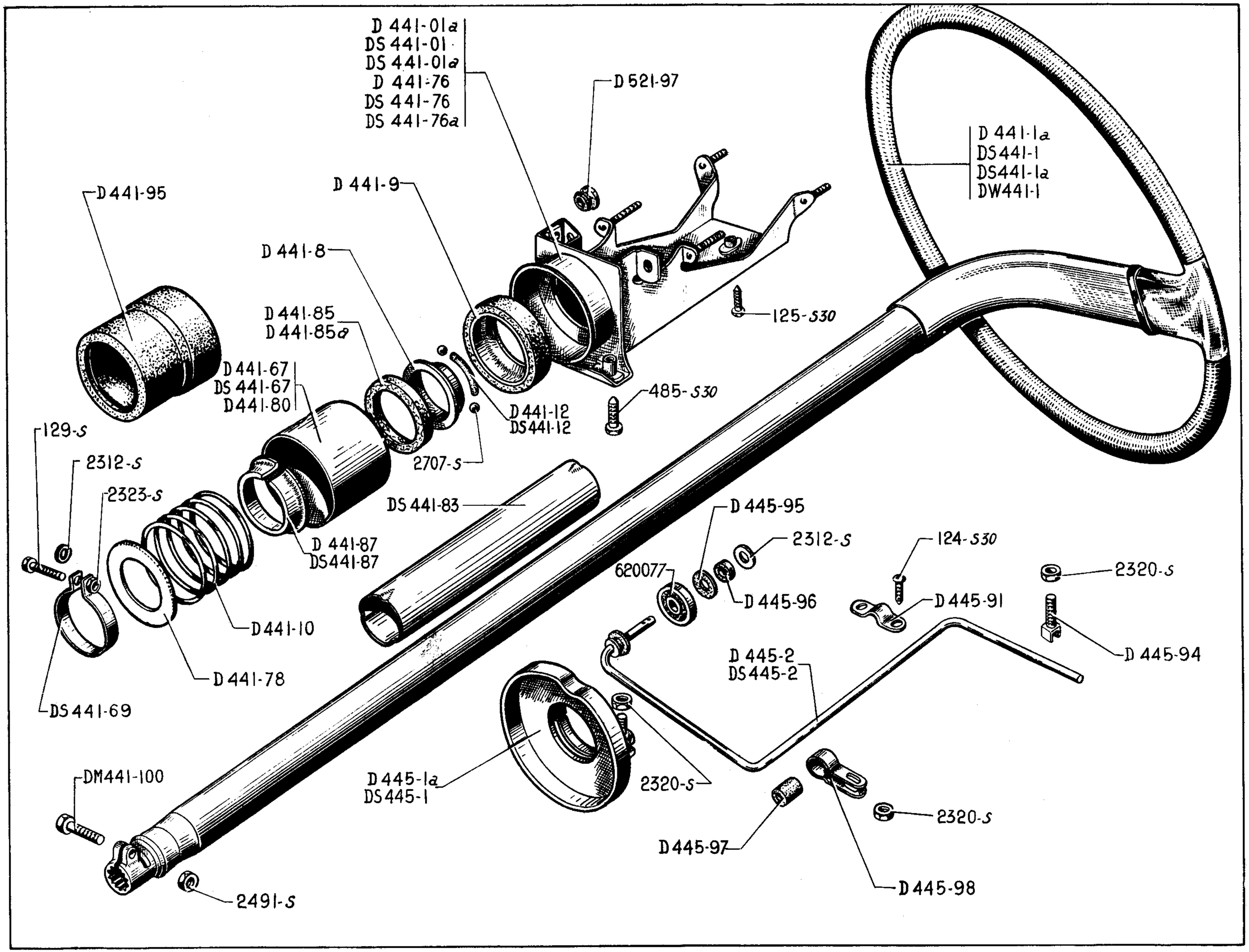
D 441-01a
DS 441-01
DS 441-01a
D 441-76
DS 441-76
DS 441-76a
D 521-97
D 441-1a
DS441-1
DS441-1a
DW441-1
D 441-95
D 441-9
D 441-8
D 441-85
D 441-85a
125-S30
D 441-67
DS 441-67
D441-80
485-S30
D441-12
DS441-12
129-S
2312-S
2707-S
2323-S
DS 441-83
D 441-87
DS441-87
D 445-95
2312-S
124-S30
620077
2320-S
D 445-96
D 445-91
D 441-10
D 445-94
D 441-78
D 445-2
DS445-2
DS441-69
DM441-100
D 445-1a
DS445-1
2320-S
2320-S
D445-97
D445-98
2491-S

NUMBER	DESCRIPTION	No. OFF
D 441-01a	Bracket complete with ball bearing and outer race for bearing 50 mm wide. Until July 1961.	1
DS 441-01	Bracket complete with ball bearing, 2 slots 6 x 10. Since July 1961.	1
DS 441-01a	Bracket complete with ball bearing (German anti-theft arrangement). Since January 1962.	1
D 441-1a	Steering wheel and column. White. Until September 1959.	1
DS 441-1	Steering wheel and column. Black. September 1959 - July 1961.	1
DS 441-1a	Steering wheel (black sheath on column). Cabriolet.	1
DW 441-1	Steering wheel and column. Black. Since July 1961.	1
D 441-8	Inner race of ball bearing in steering bracket, 43.6 x 55 x 11.	1
D 441-9	Outer race of ball bearing in steering bracket, 45 x 66.	1
D 441-10	Spring, retaining split bush for bearing in steering column bracket, internal (diameter 41 mm).	1
D 441-12	*Nylon spacing segment for balls in steering column bracket, 5·5 mm. diameter (R. VI). Until December 1956. Replaced by DS 441–12; order in addition: 6–2.707–S (R. VI).*	3

NUMBER	DESCRIPTION	No. OFF
DS 441-12	Nylon spacing segment for ball in steering column bracket, 5.5 mm diameter (R. VI). Since December 1956.	3
D 441-67	*Positioning sleeve for bearing and sealing ring in steering column bracket, 48 × 66 × 50. Until March 1957. Replaced by DS 441–67.*	1
DS 441-67	Positioning sleeve for bearing and sealing ring in steering column bracket, 48 x 66 x 50. Since March 1957.	1
DS 441-69	Clip for adjusting spring in steering column bracket, internal diameter 40 mm.	1
D 441-76	Bracket only, for steering column. Until July 1961.	1
DS 441-76	Bracket only, for steering column, 2 slots 6 x 10. Since July 1961.	1
DS 441-76a	Bracket only, for steering column (German anti-theft arrangement). Since January 1962.	1
D 441-78	Thrust ring for spring in steering column bracket, 40.5 x 49. Until May 1958. Since May 1958.	 2 3
D 441-80	*Positioning sleeve for bearing and sealing ring in steering column bracket, 48 × 66 × 18·5. Replaced by DS 441–67; order in addition: 1–D 441–85a.*	1
DS 441-83	Distance piece between collar and retaining spring on steering column, 310 mm long. Since May 1958.	1

NUMBER	DESCRIPTION	No. OFF
D 441-85	*Felt sealing washer for steering column bracket ball bearing, 49·5 × 55·5 × 4. Replaced by D 441–85a; order in addition: 1–DS 441–67.*	1
D 441-85a	Felt sealing washer for steering column bracket belt bearing, 47.5 x 55.5 x 7.	1
D 441-87	*Split bush, sheet metal, on steering column, 39 × 48. Until May 1957. Replaced by DS 441–87; order in addition: 1–DS 441–67.*	1
DS 441-87	Split bush, sheet metal, on steering column, 39.8 x 48. Since May 1957.	1
D 441-95	Sealing sleeve for steering column bracket, 73 mm long.	1
DM 441-100	Screw, hex., 7 diameter x 35 long, for locking clamp on steering column.	1
D 445-1a	Positioning cam for centring steering. Until July 1960.	1
DS 445-1	Positioning cam for centring steering. Since July 1960.	1
D 445-2	Spring for locating centring position, wire diameter 5 mm. Until July 1960.	1
DS 445-2	Spring for locating centring position. Since July 1960.	1
D 445-91	Clip securing spring locating centring position, width 10 mm, hole centres 22 mm.	1

NUMBER	DESCRIPTION	No. OFF
D 445-94	Screw, square slotted head, 5 diameter x 22 long, for adjusting tension of locating spring locating centring position.	1
D 445-95	Washer, (nylon or Rilsan), for ball bearing on steering centring spring, 5 x 17 x 0.5 thick (R. VI).	2
D 445-96	Washer, rubber, for ball bearing on centring spring, 5 x 10 x 2.	1
D 445-97	Rubber bush on steering centring spring, 5 x 12 x 16.	1
D 445-98	Clip for rubber bush on centring spring, width 12 mm.	1
D 521-97	Rubber washer 6 x 20 x 11, for centring instrument board.	2

NUMBER	DESCRIPTION	No. OFF
124-S 30	Screw, round head, 5 diameter x 12.5 long, securing clip for steering centring spring (R. III).	2
125-S 30	Screw, round head, pointed, 5 diameter x 15 long, securing steering column bracket (R. III).	1
129-S	Screw, round head, 5 diameter x 25 long, securing clip for spring adjustment in steering column bracket (R. III).	1
485-S 30	Screw, hex. head, pointed, 7 diameter x 20 long, securing steering column bracket (R. III).	2
2.312-S	Washer, plain, 5.5 x 12 (R. III):	
	- for ball bearing on centring device.	2
	- for clip securing spring.	1

NUMBER	DESCRIPTION	No. OFF
2.320-S	Nut, hex., 5 diameter x 75 long (R. III) :	
	- for screw adjusting tension of locating spring. Until July 1958.	1
	- for clip for rubber bush on centring spring.	1
	- for position cam for centring steering.	1
2.323-S	Nut, hex., 5 diameter x 75 pitch, for clip adjusting spring in steering column bracket (R. III).	1
2.491-S	Nut, hex., 7 diameter x 100 pitch, for locking clamp on steering column (R. III).	1
2.707-S	Ball, 6 mm diameter for bearing in steering column bracket (R. VI).	
	- Until December 1956.	3
	- Since December 1956.	9
620.077	Ball bearing for steering centring spring, 5 x 19 x 6 (R. VI).	1

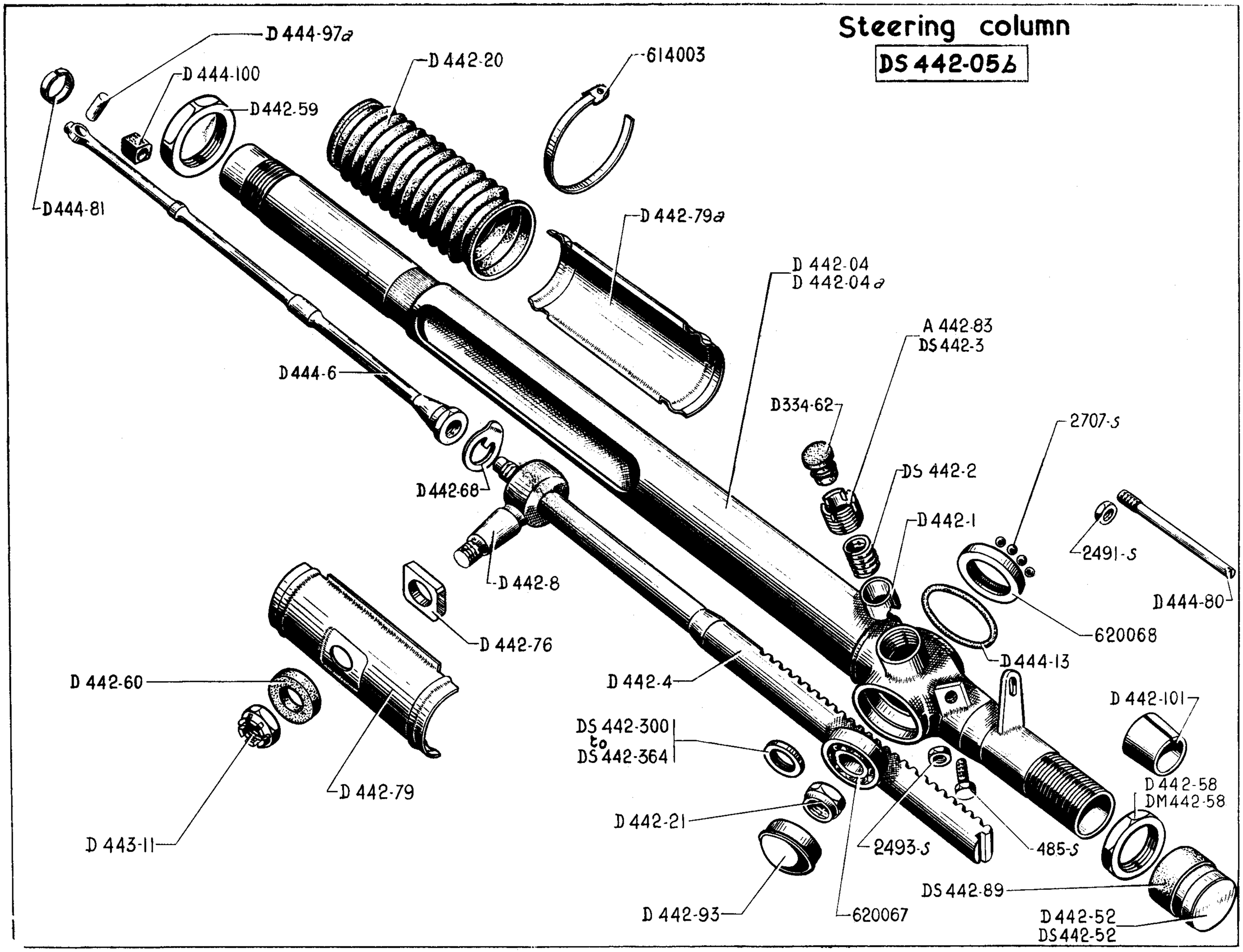
Steering column
DS 442-05b
D 444-97a
D 444-100
D 442-59
D 442-20
614003
D 444-81
D 442-79a
D 442-04
D 442-04a
A 442-83
DS 442-3
D 444-6
D334-62
2707-S
DS 442-2
D 442-68
D 442-1
2491-S
D 442-8
D 444-80
D 442-76
620068
D 444-13
D 442-60
D 442-4
D 442-101
DS 442-300
to
DS 442-364
D 442-79
D 442-58
DM442-58
D 442-21
D 443-11
2493-S
485-S
DS 442-89
D 442-93
620067
D 442-52
DS442-52

NUMBER	DESCRIPTION	No. OFF
A 442-83	Steering rack plunger guide nut, external thread 24 diameter x 150 pitch. Until May 1957.	1
D 334-62	Rubber, dust seal for steering rack plunger guide nut. Since May 1957.	1
D 442-04	Rack housing, 822 mm long (with fixed stop for steering lock). Until May 1956.	1
D 442-04a	Rack housing,822 mm long (without fixed stop for steering lock). Since May 1956.	1
DS 442-05b	Steering assembly complete.	1
D 442-1	Plunger guide for rack, 22 mm diameter.	1
DS 442-2	Spring for plunger guide for rack, external diameter 16.5 mm.	1
DS 442-3	Nut for plunger guide for rack, external thread 24 diameter x 150 pitch, internal thread 9 diameter x 125 pitch. Since May 1957.	1
D 442-4	Steering rack 435 mm, threaded 14 diameter x 150 pitch.	1
D 442-8	Pivot ball pin on rack, threaded 12 diameter x 150 pitch.	1
D 442-20	Sealing sheath for rack, internal diameter 40 mm.	2
D 442-21	Nut, hex., 12 diameter 125 pitch, for rack pinion (R. VI).	1
D 442-52	Thrust cap, adjustable for rack, threaded 30 diameter x 100 pitch. Until July 1956.	1
	Since July 1956.	2

NUMBER	DESCRIPTION	No. OFF
DS 442-52	Thrust cap, adjustable, for rack threaded 30 diameter x 100 pitch, with vent hole (rack operation end). Until July 1956.	1
D 442-58	Nut, hex., 30 diameter x 100 pitch, locking adjustable thrust cap. Since November 1961.	1
DM 442-58	Nut, hex., 30 diameter x 100 pitch, locking adjustable thrust cap. Until November 1961.	1
D 442-59	Locknut, 40 diameter x 100 pitch, on end of rack housing.	1
D 442-60	Rubber sealing ring on rack ball pin, 16.5 x 28.5 x 9.	1
D 442-68	Lockwasher, 14.2 locking rack control rod (R. VI).	1
D 442-76	Guide block for rack, 16.5 x 23 x 28 x 5.	1
D 442-79	Upper slide on rack housing, 145 mm long, 1 hole 18 mm diameter.	1
D 442-79a	Lower slide on rack housing, 145 mm long.	1
DS 442-89	Rubber ring for protection of adjustable thrust cap for rack. Until July 1956.	1
D 442-93	Cap, sheet metal, on rack housing, 34.05 mm.	1
D 442-101	*Split tapered distance piece for adjustable thrust cap, 22·5 × 28·5 × 27·5. Until May 1956. No longer supplied.*	1
	Washer for adjustment of rack pinion bearing 12 x 18. Since May 1959.	As nec.
DS 442-300	Thickness 3.35 to 3.37	
DS 442-301	" 3.37 to 3.39	
DS 442-302	" 3.39 to 3.41	

NUMBER	DESCRIPTION	No. OFF
DS 442-303	Thickness 3.41 to 3.43	As nec.
DS 442-304	" 3.43 to 3.45	
DS 442-305	" 3.45 to 3.47	
DS 442-306	" 3.47 to 3.49	
DS 442-307	" 3.49 to 3.51	
DS 442-308	" 3.51 to 3.53	
DS 442-309	" 3.53 to 3.55	
DS 442-310	" 3.55 to 3.57	
DS 442-311	" 3.57 to 3.59	
DS 442-312	" 3.59 to 3.61	
DS 442-313	" 3.61 to 3.63	
DS 442-314	" 3.63 to 3.65	
DS 442-315	" 3.65 to 3.67	
DS 442-316	" 3.67 to 3.69	
DS 442-317	" 3.69 to 3.71	
DS 442-318	" 3.71 to 3.73	
DS 442-319	" 3.73 to 3.75	
DS 442-320	" 3.75 to 3.77	
DS 442-321	" 3.77 to 3.79	
DS 442-322	" 3.79 to 3.81	
DS 442-323	" 3.81 to 3.83	
DS 442-324	" 3.83 to 3.85	
DS 442-325	" 3.85 to 3.87	
DS 442-326	" 3.87 to 3.89	
DS 442-327	" 3.89 to 3.91	
DS 442-328	" 3.91 to 3.93	
DS 442-329	" 3.93 to 3.95	
DS 442-330	" 3.95 to 3.97	
DS 442-331	" 3.97 to 3.99	
DS 442-332	" 3.99 to 4.01	
DS 442-333	" 4.01 to 4.03	
DS 442-334	" 4.03 to 4.05	
DS 442-335	" 4.05 to 4.07	
DS 442-336	" 4.07 to 4.09	
DS 442-337	" 4.09 to 4.11	
DS 442-338	" 4.11 to 4.13	
DS 442-339	" 4.13 to 4.15	
DS 442-340	" 4.15 to 4.17	
DS 442-341	" 4.17 to 4.19	
DS 442-342	" 4.19 to 4.21	
DS 442-343	" 4.21 to 4.23	
DS 442-344	" 4.23 to 4.25	
DS 442-345	" 4.25 to 4.27	
DS 442-346	" 4.27 to 4.29	
DS 442-347	" 4.29 to 4.31	
DS 442-348	" 4.31 to 4.33	
DS 442-349	" 4.33 to 4.35	
DS 442-350	" 4.35 to 4.37	
DS 442-351	" 4.37 to 4.39	
DS 442-352	" 4.39 to 4.41	

NUMBER	DESCRIPTION	No. OFF
DS 442-353	Thickness 4.41 to 4.43	As nec.
DS 442-354	" 4.43 to 4.45	
DS 442-355	" 4.45 to 4.47	
DS 442-356	" 4.47 to 4.49	
DS 442-357	" 4.49 to 4.51	
DS 442-358	" 4.51 to 4.53	
DS 442-359	" 4.53 to 4.55	
DS 442-360	" 4.55 to 4.57	
DS 442-361	" 4.57 to 4.59	
DS 442-362	" 4.59 to 4.61	
DS 442-363	" 4.61 to 4.63	
DS 442-364	" 4.63 to 4.65	
D 443-11	Nut, hex., castellated, 12 diameter x 150 pitch, for rack ball pin.	1
D 444-6	Rod controlling rack, threaded 14 diameter x 150 pitch, length 460 mm.	1
D 444-13	Sealing joint between rotating union and rack casing, 37 x 47.6 x 5.3.	1

NUMBER	DESCRIPTION	No. OFF
D 444-80	Rod securing rotating union, threaded 7 diameter x 100 pitch, length 105.5 mm.	1
D 444-81	Split ring locking connecting pin for rod controlling rack and piston, internal diameter 19.5 mm.	1
D 444-97a	Connecting pin for rod controlling rack and piston, 6 x 19.5.	1
D 444-100	Bush, rubber, anti-rattle on rack control rod, length 15 mm. Since May 1956.	1
485-S	Screw, hex. head, 7 diameter x 20 long, for stop on steering lever (R. III). Until May 1956.	1

NUMBER	DESCRIPTION	No. OFF
2.491-S	Nut, hex., 7 diameter x 100 pitch, on rod securing rotating union (R. III).	1
2.493-S	Nut, hex., 7 diameter x 100 pitch, for screw for stop on steering lever (R. III). Until May 1956.	1
2.707-S	Ball, 6 mm diameter for upper ball bearing on rack pinion (R. VI).	13
614.003	Clip for securing gaiter on rack, length 335 mm (R. VI).	4
620.067	Ball bearing, lower for rack pinion 12 x 32 x 10 (R. VI).	1
620.068	Outer race for upper ball bearing on rack pinion, 27.4 x 35 x 7.5 (R. II).	1

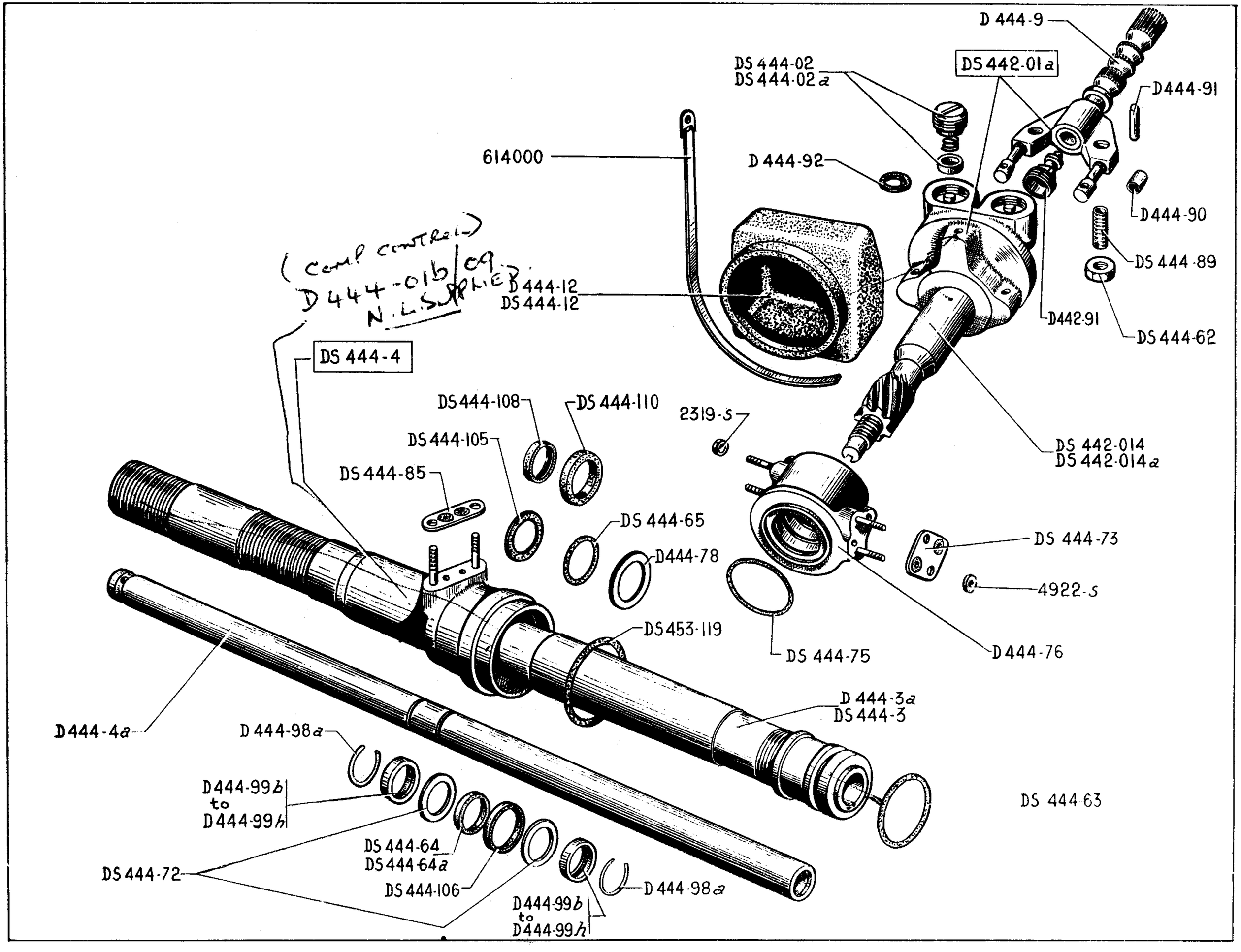
D 444-9
DS 444-02
DS 444-02a
DS 442-01a
D444-91
614000
D 444-92
D444-90
DS 444-89
(comp control)
D444-01b/09
N.L.S. SUPPLIED
D 444-12
DS 444-12
D442-91
DS 444-62
DS 444-4
DS 444-108
DS 444-110
2319-S
DS 444-105
DS 442-014
DS 442-014a
DS 444-85
DS 444-65
DS 444-73
D444-78
4922-S
DS453-119
DS 444-75
D444-76
D 444-3a
DS 444-3
D444-4a
D 444-98a
D444-99b
to
D444-99h
DS 444-63
DS 444-64
DS 444-64a
DS 444-72
DS 444-106
D 444-98a
D444-99b
to
D444-99h

NUMBER	DESCRIPTION	No. OFF
DS 442-01a	Pinion controlling rack complete with rotating union and coupling fork.	1
DS 442-014	*Pinion for rack, with valves and dashpots. Until April 1959. Replaced by DS 442-014a; order in addition: 1-DS 444-12.*	1
DS 442-014a	Pinion for rack, with valves and dashpot DS 444-02a. Since April 1959.	1
D 442-91	Sperical end piece for rack pinion, threaded 20 x 125.	1
D 444-01b	Control for rack complete with casing end piece, cylinder and piston, threaded 30 diameter x 100 pitch on 31 mm.	1
DS 444-02	Cap for dash-pot with spring and thrust washer for valve, 13.5 mm long. Until April 1959.	2
DS 444-02a	Cap for dash-pot with spring and thrust washer for valve, length 18.5 mm. Since April 1959.	2
D 444-3a	*Cylinder controlling rack with end piece. Until May 1958. Replaced by DS 444-3; order in addition: 2-DS 444-105.*	1
DS 444-3	Cylinder controlling rack with end piece. Since May 1958.	1
DS 444-4	Rod controlling rack piston.	1
D 444-9	Coupling fork for rack pinion.	1
D 444-12	Cover, rubber, protecting steering pinion. Until April 1959.	1
DS 444-12	Cover, rubber, protecting steering pinion. Since April 1959.	1
DS 444-62	Nut, hex., 7 diameter x 100 pitch, with shoulder for adjusting screw for rotating union slide valve.	2

NUMBER	DESCRIPTION	No. OFF
DS 444-63	Ring seal, 27.7 x 33.1 x 2.7, for rack control (R. VI).	2
DS 444-64	*Ring seal, 21·15 × 26 × 2·45, for piston rod. Until February 1958. Replaced by DS 444-64a; order in addition: 1-DS 444-106 (R. VI).*	1
DS 444-64a	Joint, rubber, 20.1 x 24.2 x 2.2, for piston rod controlling rack. Since February 1958.	1
DS 444-65	Ring seal, 21.3 x 28.5 x 3.6, for piston rod. Until March 1962.	2
DS 444-72	Washer, Rilsan, for piston controlling rack, 21 x 25.3 x 1. Since October 1959. Replaces steel washer.	2
DS 444-73	Seal plate for piping on rotating union, 2 holes 7.6, 2 fixing holes 16 mm between centres (R. VI).	2
DS 444-75	Ring seal for rotating union, 24.5 x 29.9 x 2.7 (R. VI).	5
D 444-76	Rotating union, only.	1
D 444-78	Sealing washer, 22 x 29.5 x 1, for rack control (R. VI).	1
DS 444-85	Seal plate for joints of piping on end casing, 2 holes 7.6, 2 fixing holes 30 mm between centres (R. VI).	1
DS 444-89	Screw, 7 diameter x 100 pitch, for adjusting rotating union slide valve, 18.5 mm long.	2
D 444-90	Rubber bush for rotating union, 8.8 x 11.5 x 9.	2

NUMBER	DESCRIPTION	No. OFF
D 444-91	Needle, 2.5 x 14.75, operating steering slide valve (R. VI).	2
D 444-92	Sealing ring between plug and cylinder of rotating union, 22 x 3.5.	2
D 444-98a	Circlip, retaining piston joint washers, 1 mm diameter wire.	2
	Shouldered washer, retaining piston joint, 21 x 22.05 x 24.8: On diameter: 21	As nec.
D 444-99b	Thickness 1.30 to 1.38	
D 444-99c	" 1.38 to 1.46	
D 444-99d	" 1.46 to 1.54	
D 444-99e	" 1.54 to 1.62	
D 444-99f	" 1.62 to 1.70	
D 444-99g	" 1.70 to 1.78	
D 444-99h	" 1.78 to 1.86	
DS 444-105	Washer, Rilsan, 21 x 27.3 x 0.3, for rack control. Since May 1958.	2
DS 444-106	Joint, Teflon, 24.2 x 25.7 x 2.3, for piston rod controlling rack (R. VI). Since February 1958.	1
DS 444-108	Joint, Teflon, for piston rod, 20.6 x 22 x 4.4 (R. VI). Since March 1962.	1
DS 444-110	Joint, rubber, for piston rod, 22 x 27.65 x 4 (R. VI). Since March 1962.	1
DS 453-119	Ring seal, 37 x 44 x 3.5, for rack control.	1
2.319-S	Nut, hex., 5 diameter x 75 pitch, securing piping on rotating union (R. III).	4
4.922-S	Ring seal, 4.2 x 8 x 1.9, for seal plate (R. VI). Since October 1956.	
	- for seal plate DS 444-73.	4
	- for seal plate DS 444-85.	2
614.000	Clip securing rubber protective cover for steering pinion 474 mm long (R. VI).	1

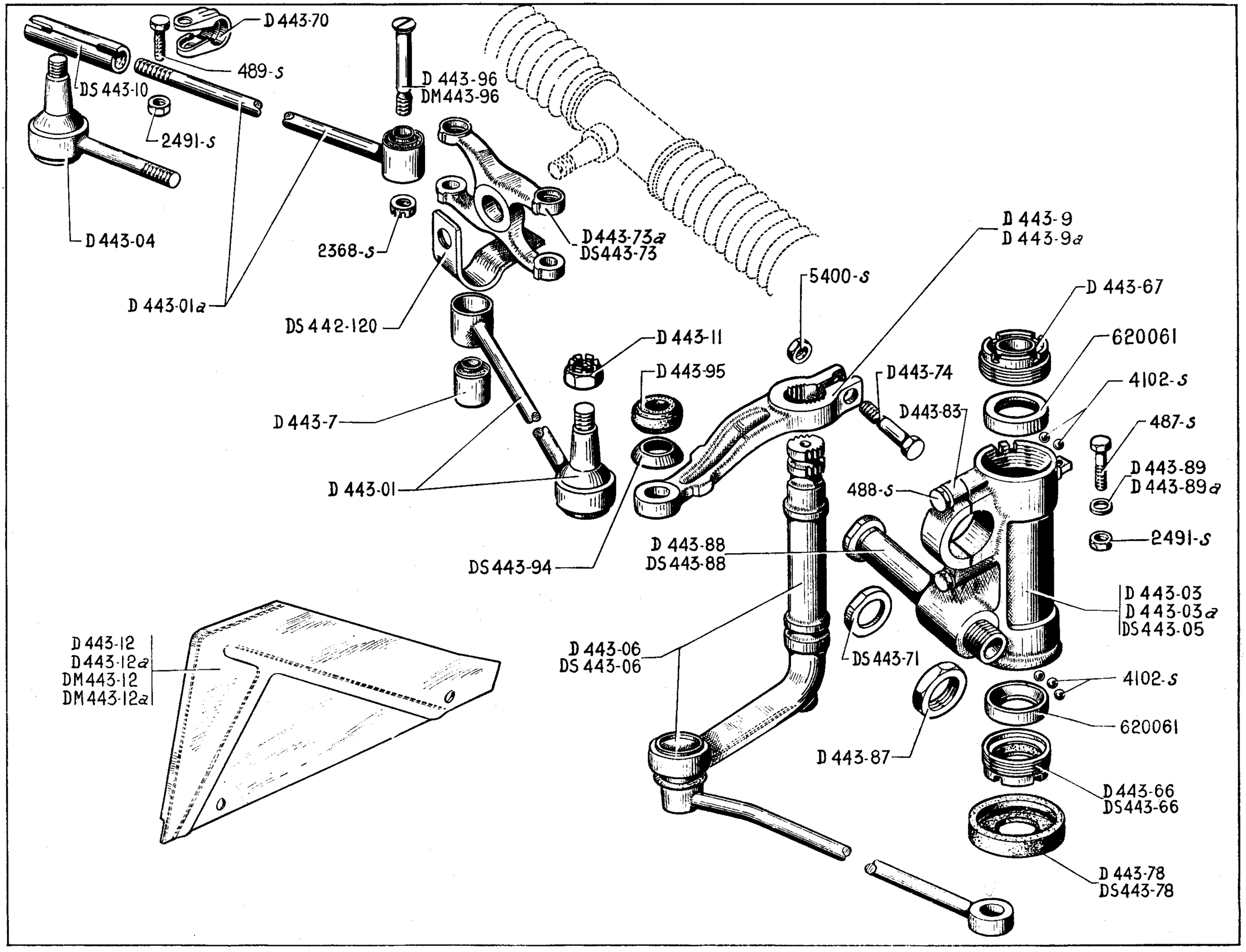
D 443-70
489-s
DS 443-10
2491-s
D 443-04
D 443-01a
D 443-96
DM443-96
2368-s
D443-73a
DS443-73
DS 442-120
D 443-9
D 443-9a
5400-s
D 443-67
620061
D 443-11
D 443-95
D443-74
4102-s
D443-83
487-s
D 443-7
D 443-01
488-s
D 443-89
D 443-89a
2491-s
D 443-88
DS 443-88
DS 443-94
D 443-03
D 443-03a
DS443-05
D 443-12
D 443-12a
DM443-12
DM443-12a
D 443-06
DS 443-06
DS 443-71
4102-s
620061
D 443-87
D 443-66
DS443-66
D 443-78
DS443-78

NUMBER	DESCRIPTION	No. OFF
DS 442-120	Spring retaining rack ball pin, 1.7 mm thick.	1
D 443-01	Steering rod, left-hand, with flexible bush and ball pin, 402 mm between centres.	1
D 443-01a	Steering rod, right-hand with flexible bush, length from the end to pin centre, 305 mm.	1
D 443-03	Relay housing, left-hand, complete with upper and lower levers and tie-rod.	1
D 443-03a	Relay housing, right-hand, complete with upper and lower levers and tie-rod.	1
D 443-04	End piece with ball pin for right side of steering rod, threaded 14 diameter, 125 left-hand pitch.	1
DS 443-05	Relay housing with cap and bushing, shoulder 53 mm diameter.	2
D 443-06	*Lever, lower, for relay complete with coupling rod. Until January 1961. Replaced by DS 443-06.*	2
DS 443-06	Lever, lower, for relay with coupling rod. Since January 1961.	2
D 443-7	Flexible bush in steering rod, 10 x 22 x 33 (R. VI).	2
D 443-9	Lever, upper, left-hand, for relay, 130 mm between centres.	1
D 443-9a	Lever, upper, right-hand, for relay, 130 mm between centres.	1
DS 443-10	Adjustment sleeve on steering rod, right-hand, threaded 14 diameter x 125 left-hand and right-hand pitch.	1
D 443-11	Nut, hex., castellated, 12 diameter x 150 pitch, for ball pins on steering rod.	6
D 443-12	Shield, left-hand, protecting relay housing. Until May 1958.	1
D 443-12a	Shield, right-hand, protecting relay housing. Until May 1958.	1

NUMBER	DESCRIPTION	No. OFF
DM 443-12	Shield, left-hand, protecting relay housing. Since May 1958.	1
DM 443-12a	Shield, right-hand, protecting relay housing. Since May 1958.	1
D 443-66	Nut, hex., 45 diameter x 150 pitch, for bottom of relay housing with sealing washer, internal diameter 31 mm. Until January 1961.	2
DS 443-66	Nut, hex., 45 diameter x 150 pitch, for bottom of relay housing. Since January 1961.	2
D 443-67	Nut, hex., 45 diameter x 150 pitch, for top of relay housing with sealing washer, internal diameter 25.5 mm.	2
D 443-70	Clamp securing adjustment sleeve on right-hand steering rod, internal diameter 17.7 mm.	2
DS 443-71	Washer, 22 x 43 x 6, locking spindle securing relay housing. Since May 1958.	2
D 443-73a	Shackle for connecting steering rods, distance between centres 60 mm, thickness 16 mm. Until October 1959.	1
DS 443-73	Shackle for connecting steering rods, 17 mm thick. Since October 1959.	1
D 443-74	Screw, hex. head, 9 diameter x 125 pitch, 50 mm long, for locking upper relay lever.	2
D 443-78	Ring, rubber, for bottom of steering relay housing, 24 x 41.5 x 6.5. Until January 1961.	2
DS 443-78	Rubber ring for bottom of relay housing, diameter 28 and 52.5. Since January 1961.	2
D 443-83	Cap for relay housing.	2
D 443-87	Nut, hex., 20 diameter x 150 pitch, securing bottom of relay housing.	2
D 443-88	Bolt for securing bottom of steering relay housing, 20 diameter x 150 pitch, 112 mm long. Until May 1958.	2

NUMBER	DESCRIPTION	No. OFF
DS 443-88	Bolt for securing bottom of steering relay housing, 122 mm long. Since May 1958.	2
D 443-89	Washer, 7.5 x 14 x 2, for adjustment of relay housing.	As nec.
D 443-89a	Washer, 7.5 x 14 x 3, for adjustment of relay housing.	As nec.
DS 443-94	Sealing cup on steering rod ball pin (R. VI).	4
D 443-95	Rubber thrust washer for sealing cup on steering rod ball pin.	4
D 443-96	Bolt for steering rod shackle, 9 diameter x 58 long, slotted head. Until October 1959.	2
DM 443-96	Bolt for steering rod shackle, flat head. Since October 1959.	2
487-S	Screw, hex. head, 7 diameter x 25 long, for locking top of relay housing (R. III).	2
488-S	Screw, hex. head, 7 diameter x 28 long, securing relay cap (R. III).	4
489-S	Screw, hex. head, 7 diameter x 30 long (R. III) securing :	
	- clamp on adjustment sleeve on right-hand steering rod.	2
2.368-S	Nut, hex., castellated, 9 diameter x 125 pitch, for bolts in shackle connecting steering rods (R. III).	2
2.491-S	Nut, hex., 7 diameter x 100 pitch (R. III) securing:	
	- collar locking adjustment sleeve on right-hand steering rod.	2
	- for bolt locking top of steering relay housing.	2
4.102-S	Ball, 6.74 mm diameter for ball bearing in steering relay (R. VI).	56
5.400-S	Nut, hex., 9 diameter x 125 pitch, for screw locking upper lever of relay (R. III).	2
620.061	Outer race of ball bearing for steering relay, 35 x 43 x 10 (R. II).	4

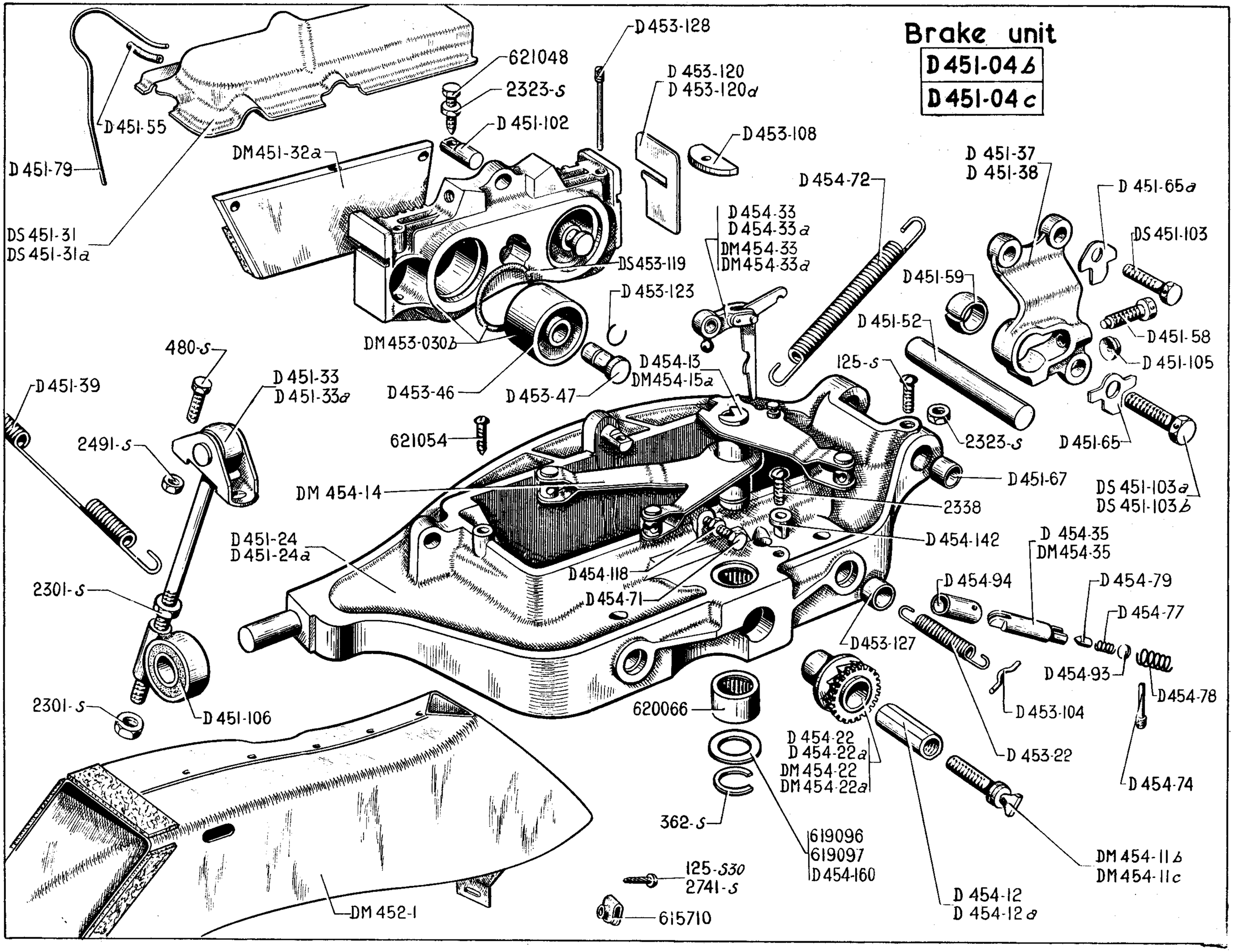
Brake unit
D 451-04 b
D 451-04 c
D 453-128
621048
2323-s
D 451-102
D 453-120
D 453-120a
D 453-108
D 451-55
D 451-79
DM451-32a
DS 451-31
DS 451-31a
DS453-119
D 453-123
DM453-030b
D 453-46
D 453-47
D 454-72
D 454-33
D 454-33a
DM454-33
DM454-33a
D 451-37
D 451-38
D 451-65a
DS 451-103
D 451-59
D 451-52
D 451-58
D 451-105
125-s
D 454-13
DM454-15a
2323-s
D 451-65
DS 451-103a
DS 451-103b
D 451-67
2338
480-s
D 451-33
D 451-33a
D 451-39
2491-s
621054
DM 454-14
D 451-24
D 451-24a
D 454-118
D 454-71
D 454-142
D 454-35
DM454-35
D 454-94
D 454-79
D 454-77
D 453-127
D 454-93
D 454-78
D 453-104
D 453-22
D 454-74
2301-s
2301-s
D 451-106
620066
D 454-22
D 454-22a
DM 454-22
DM 454-22a
362-s
619096
619097
D 454-160
DM 454-11b
DM 454-11c
125-S30
2741-s
615710
D 454-12
D 454-12a
DM 452-1

NUMBER	DESCRIPTION	No. OFF
	Until February 1958	
D 451-04b	Brake control unit complete, left-hand.	1
D 451-04c	Brake control unit complete, right-hand.	1
D 451-24	*Cradle, left-hand with roller bearing and bushes. Replaced by DM 451-24; order in addition: 1-DM 454-142, 1-487-S (R. III).*	1
D 451-24a	*Cradle, right-hand with roller bearing and bushes. Replaced by DM 451-24a; order in addition: 1-DM 454-142, 1-487-S (R. III).*	1
DS 451-31	Protection cover, left-hand.	1
DS 451-31a	Protection cover, right-hand.	1
DM 451-32a	Segment carrying lining (with brake lining).	4
D 451-33	Support, adjustable, front left-hand (male part), threaded 12 diameter x 125 pitch.	1
D 451-33a	Support, adjustable, front left-hand 108.5 mm long (male part), threaded 12 diameter x 125 pitch.	1
D 451-37	Support, rear left-hand. - 2 holes 13 mm diameter. - 1 hole 10 mm diameter.	1
D 451-38	Support, rear right-hand. - 1 hole 13 mm diameter. - 1 hole 10 mm diameter.	1
D 451-39	*Return spring for brake control unit, external diameter 11·6 mm. Until April 1956. No longer supplied.*	1
D 451-52	Pin for rear support 9 x 16 x 80.	2
D 451-55	Sleeve, rubber, protecting spring retaining cover, 2.5 x 6 x 25.	2
D 451-58	Screw, hex. head, 9 diameter 25 long, locking spherical bush in rear support.	2
D 451-59	Spherical bush in rear support, 28 mm diameter 17 mm thick.	2

NUMBER	DESCRIPTION	No. OFF
D 451-65	Lockwasher, 12.5 mm for screw securing rear support.	2
D 451-65a	Lockwasher, 9.5 mm for screw securing rear support.	3
D 451-67	Bush for cradle 16 x 19 x 16 (R. VI).	4
D 451-79	Spring retaining protection cover 3 mm diameter.	2
D 451-102	Pin carrying screw for locking lined segment 9 mm diameter 26 mm long.	4
DS 451-103	Screw, hex. head 9 diameter 25 long, securing rear support.	3
DS 451-103a	Screw, hex. head 12 diameter 35 long, securing rear support.	3
DS 451-103b	Screw, hex. head 12 diameter 50 long, securing rear support.	1
D 451-105	Plug, locking spherical bush in rear support, 17 mm diameter 6 mm thick.	2
D 451-106	Support, front, adjustable (female part) 13 mm bore (R. VI).	2
DM 452-1	Cooling duct for front brake.	2
DM 453-030b	Moving carrier with pistons and ring seals, replace type fitted up to February 1958, order in additional 2-DM 453-108 and 1-DM 454-12 for the left side or 1-DM 454-12a for the right side.	2
D 453-22	Return spring for moving carrier, external diameter 15.6 mm.	4
D 453-46	Piston for moving carrier 38 x 26.	4
D 453-47	Piston rod in moving carrier, 11 mm diameter 27.35 long.	4
D 453-104	Anchor pin for moving carrier return spring 3.5 x 23.	1
D 453-108	Guide plate for moving carrier 34 x 13.5 x 4.	4
DS 453-119	Ring seal 37 x 44 x 3.5 for moving carrier.	4

NUMBER	DESCRIPTION	No. OFF
D 453-120	Shim for adjustment of moving carrier 0.6 mm thick.	As nec.
D 453-120a	Shim for adjustment of moving carrier 0.7 mm thick.	As nec.
D 453-123	Circlip for piston in moving carrier, 0.7 mm thick (R. VI).	4
D 453-127	Bush, retaining anchor pin for moving carrier return spring 16 x 18 x 18.	4
D 453-128	Anchor screw for moving carrier return spring 4 diameter 75 pitch, 43 mm long.	4
DM 454-11b	Push-rod adjustable, male for left hand brake unit, 10.5 diameter 1.8 right hand pitch.	1
DM 454-11c	Push-rod adjustable, male for right hand brake unit, 10.5 diameter 1.8 left hand pitch, marked with 1 groove.	1
D 454-12	Push-rod, adjustable, female for left hand brake unit, 10.5 diameter 1.8 right hand pitch.	1
D 454-12a	Push-rod adjustable, female for right hand brake unit, 10.5 diameter 1.8 left hand pitch, marked with 1 chamfer.	1
D 454-13	Lever with spindle for mechanical operation of brake control unit, left hand.	1
DM 454-14	Bell-crank lever on left hand brake unit 115 between centres.	1
DM 454-15a	Lever with spindle for mechanical operation of brake control unit, right hand.	1
D 454-22	Adjustment wheel, left hand, 8 teeth, external diameter 28 mm. Until December 1957.	1
D 454-22a	Adjustment wheel, right hand, 8 teeth, external diameter 28 mm. Until December 1957.	1

NUMBER	DESCRIPTION	No. OFF
DM 454-22	Adjustment wheel, left hand, 10 teeth. Since December 1957.	1
DM 454-22a	Adjustment wheel, right hand, 10 teeth. Since December 1957.	1
D 454-33	*Pawl on left-hand brake control unit (R. VI). Until December 1957. Replaced by DS 454-33; order in addition: 1-DS 451-31.*	1
D 454-33a	*Pawl on right-hand brake control unit (R. VI). Until December 1957. Replaced by DS 454-33a; order in addition: 1-DS 451-31a.*	1
DM 454-33	Pawl on left hand brake control unit (R.VI). Since December 1957.	1
DM 454-33a	Pawl on right hand brake control unit (R. VI). Since December 1957.	1
D 454-35	Locking pin 9.5 x 44.5. Until December 1957.	2
DM 454-35	Locking pin. Since December 1957.	2
D 454-71	Stop pin for control lever, threaded 5 diameter 75 pitch 20 mm long.	2
D 454-72	Return spring for control lever, external diameter 14.2 mm.	2
D 454-74	Stop screw for spring on locking pin, 5 diameter 75 pitch, 28 mm long (R. VI).	2
D 454-77	Spring for plunger on locking pawl, external diameter 4.5 mm.	2
D 454-78	Locking spring, external diameter 7.5 mm.	2

NUMBER	DESCRIPTION	No. OFF
D 454-79	Plunger in locking pin 4.8 x 7.5 (R.VI).	2
D 454-93	Disc for plunger spring in locking pin 7.5 mm. diameter 1 mm. thick.	2
D 454-94	Guide bush for locking pin 9.5 x 13 x 29 (R.VI).	2
D 454-118	Nut, hex. 5 diameter 75 pitch on stop pin for control lever (R.VI).	2
D 454-142	Eccentric stop for control lever adjustment 12 mm. diameter height 9 mm. internal diameter 5.25 mm.	2
D 454-160	Spacing washer, upper for mechanical control lever 20 x 32 x 4. Since October 1956.	1
125-S	Screw, round head 5 diameter 15 long for anchorage of control lever return spring (R.III).	2
125-S-30	Screw, round head pointed 5 diameter 15 long, securing brake cooling duct (R.III).	2
362-S	Circlip 18 x 24 x 1.5 for mechanical control lever spindle (R.III).	2
480-S	Screw hex. head 7 diameter 14 long, securing front adjustable support (R.III).	4
2.301-S	Nut, hex. 12 diameter 125 pitch, securing front adjustable support (female part) (R.III).	4

NUMBER	DESCRIPTION	No. OFF
2.323-S	Nut, hex. 5 diameter 75 pitch (R.III) for screw:	
	- locking brake segment	4
	- for anchorage of return spring on control lever	2
2.338	Screw, hex. head 5 diameter 20 long for eccentric thrust bearing for adjustment of control lever (R.III).	2
2.491-S	Nut, hex. 7 diameter 100 pitch, securing front adjustable support (R.III).	4
2.741-S	Screw P.K. round head 4.85 x 9.5 securing brake cooling duct (R.VI).	4
615.710	Nut clips securing brake cooling ducts (R.VI).	4
619.096	Washer, lower for mechanical control levers 20 x 32 x 1 (R.II).	2
619.097	Washer, upper for mechanical control lever, right hand 20 x 32 x 4 (R.II). Until October 1956.	1
620.066	Needle roller bearing for cradle 20 x 26 x 16 (R.VI).	4
621.048	Screw, hex. head pointed 5 diameter 75 pitch 22 mm. long locking plate carrying brake lining (R.II).	4
621.054	Screw, hex. head pointed 5 diameter 35 long for locking guide plate for moving carrier (R.II).	4

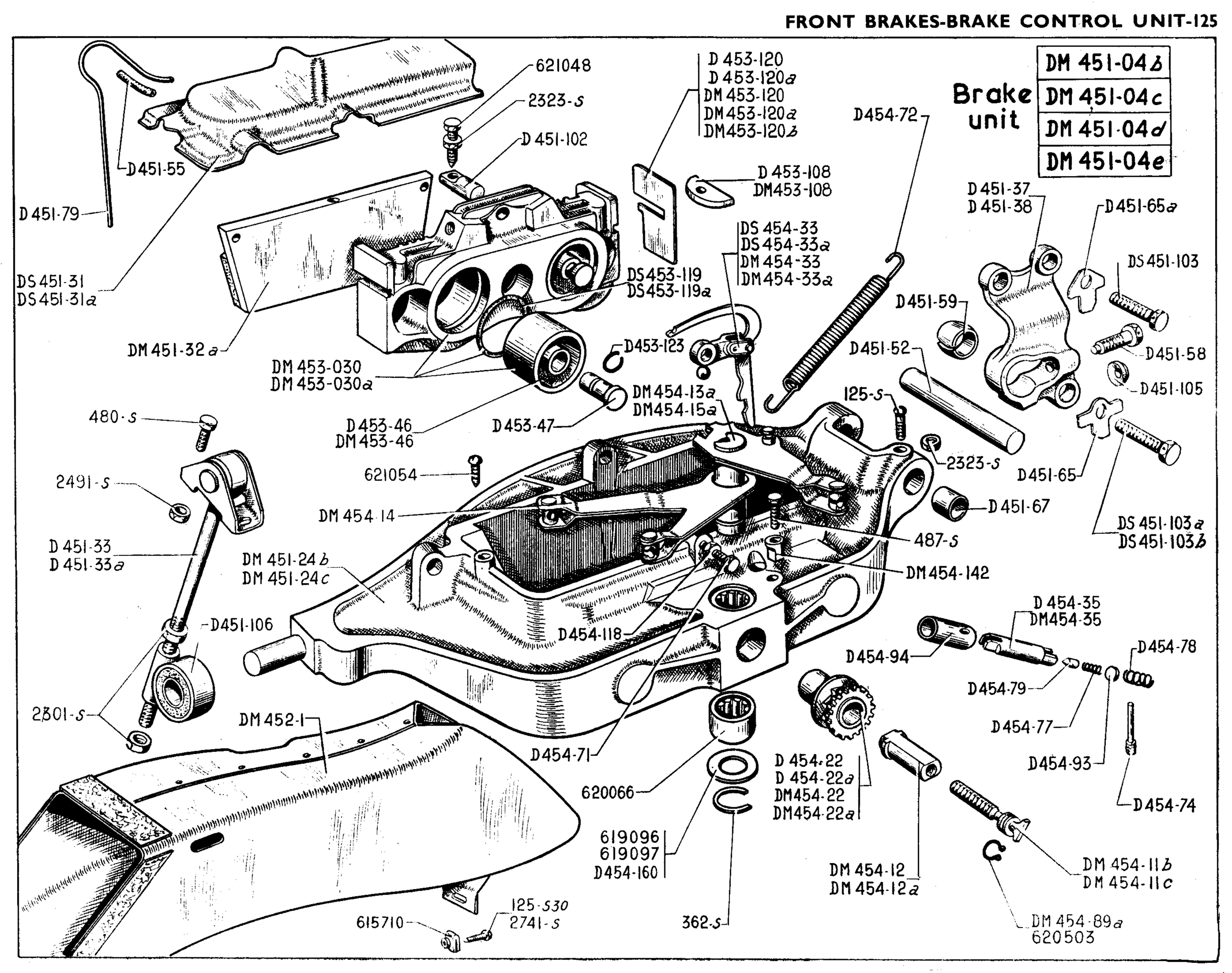
Brake unit
DM 451-04b
DM 451-04c
DM 451-04d
DM 451-04e
621048
2323-s
D 451-102
D 451-55
D 451-79
DS 451-31
DS 451-31a
DM 451-32a
DM 453-030
DM 453-030a
D 453-120
D 453-120a
DM 453-120
DM 453-120a
DM 453-120b
D 453-108
DM453-108
DS 453-119
DS 453-119a
DS 454-33
DS 454-33a
DM 454-33
DM 454-33a
D453-123
DM 454-13a
DM454-15a
D 453-46
DM 453-46
D 453-47
480-s
2491-s
621054
DM 454-14
D 451-33
D 451-33a
DM 451-24b
DM 451-24c
D451-106
2301-s
DM 452-1
D454-71
620066
619096
619097
D454-160
362-s
125-S30
2741-s
615710
D454-72
D 451-37
D 451-38
D451-65a
DS 451-103
D451-59
D451-52
D451-58
D451-105
125-s
2323-s
D451-65
D 451-67
DS 451-103a
DS 451-103b
487-s
DM 454-142
D 454-35
DM454-35
D454-94
D454-78
D454-79
D454-77
D454-93
D454-74
D 454-22
D 454-22a
DM454-22
DM454-22a
DM 454-12
DM 454-12a
DM 454-11b
DM 454-11c
DM 454-89a
620503

NUMBER	DESCRIPTION	No. OFF
	Since February 1958	
	(Return springs for moving carrier discontinued)	
DM 451-04b	Brake control unit, left-hand, complete. Until July 1960.	1
DM 451-04c	Brake control unit, right-hand, complete. Until July 1960.	1
DM 451-04d	Brake control unit, left-hand, with 42 mm. pistons. Since July 1960.	1
DM 451-04e	Brake control unit, right-hand, with 42 mm. pistons. Since July 1960.	1
DM 451-24b	Cradle, left-hand with bearings.	1
DM 451-24c	Cradle, right-hand with bearings.	1
DS 451-31	Protection cover, left-hand.	1
DS 451-31a	Protection cover, right-hand.	1
DM 451-32a	Segment carrying lining (with brake lining quality 623).	4
D 451-33	Support, adjustable, front left-hand (male part), threaded 12 diameter x 125 pitch. Left and right-hand. Since September 1962.	1 2
D 451-33a	Support, adjustable front right-hand, length 108.5 mm (male part), threaded 12 diameter x 125 pitch. Until September 1962.	1
D 451-37	Support, rear left-hand: - 2 holes 10 mm diameter. - 1 hole 13 mm diameter.	1
D 451-38	Support, rear right-hand: - 1 hole 13 mm diameter. - 1 hole 10 mm diameter.	1
D 451-52	Pin for rear support, 9 x 16 x 80.	2
D 451-55	Sleeve, rubber, protection spring retaining cover, 2.5 x 6 x 25.	2

NUMBER	DESCRIPTION	No. OFF
D 451-58	Screw, hex. head, 9 diameter x 25 long, for locking spherical bush in rear support.	2
D 451-59	Spherical bush in rear support 28 mm diameter, 17 mm thick.	2
D 451-65	Lockwasher 12.5 mm for screw securing rear support. Until April 1958.	2
D 451-65a	Lockwasher 9.5 mm for screw securing rear support. Until April 1958.	3
D 451-67	Bush for cradle, 16 x 19 x 16 (R. VI).	4
D 451-79	Spring retaining protection cover, 3 mm diameter.	2
D 451-102	Pin carrying screw locking lined segment 9 mm diameter, 26 mm long.	4
DS 451-103	Screw, hex. head, 9 diameter x 25 long, (1 hole in head), securing rear support.	3
DS 451-103a	Screw, hex. head, 12 diameter x 39 long (1 hole in head) securing rear support.	1
DS 451-103b	Screw, hex. head, 12 diameter x 54 long (1 hole in head).	1
D 451-105	Plug locking spherical bush in rear support, 17 mm diameter, 6 mm thick.	2
D 451-106	Support, adjustable, front (female part), bore 13 mm diameter (R. VI).	2
DM 452-1	Cooling duct for front brake. Until September 1962.	2
DS 452-1a	Cooling duct for front brake. Since September 1962.	2
DS 452-89	Sealing joint, black rubber, between brake duct and panel (R. VI). Since September 1962.	2
DM 453-030	Moving carrier with 38 mm pistons and ring seals. June 1959-July 1960. Replaces earlier type; order in addition: 2-DM 453-108.	2

NUMBER	DESCRIPTION	No. OFF
DM 453-030a	Moving carrier with 42 mm pistons and ring seals. Since July 1960.	2
D 453-46	Piston for moving carrier, 38 x 26. Until July 1960.	4
DM 453-46	Piston for moving carrier, 42 x 26. Since July 1960.	4
D 453-47	Piston rod for moving carrier, 11 mm diameter, 27.35 mm long.	4
D 453-108	Guide plate for moving carrier, 34 x 13.5 x 4. Until June 1959.	4
DM 453-108	Guide plate for moving carrier, 40 x 15.5 x 4. Since June 1959.	4
DS 453-119	Ring seal, 37 x 44 x 3.5, for moving carrier. Until July 1960.	4
DS 453-119a	Ring seal, 41.3 x 48.5 x 3.6, for moving carrier. Since July 1960.	4
D 453-120	Shim for moving carrier adjustment 0.6 mm thick, 45 mm wide. Until June 1959.	As nec.
D 453-120a	Shim for moving carrier adjustment 0.7 mm thick, 45 mm wide. Until June 1959.	As nec.
	Shim for moving carrier adjustment 47 mm wide. Since June 1959.	As nec.
DM 453-120 DM 453-120a DM 453-120b	Thickness: 0.635 mm. " 0.685 mm. " 0.736 mm.	
D 453-123	Circlip for piston rod in moving carrier, 0.7 mm thick (R. VI).	4
DM 454-11b	Adjustable push-rod, male, for left-hand brake control unit, 16 mm diameter on length 13.25 mm.	1
DM 454-11c	Adjustable push-rod, male, for right-hand brake control unit, 16 mm diameter on length 13.25 mm.	1

The numbers underlined indicate new parts and do not appear on the illustrations.

NUMBER	DESCRIPTION	No. OFF
DM 454-12	Adjustable push-rod, female, for brake control unit, left-hand diameter 15.4 and 19.5 mm.	1
DM 454-12a	Adjustable push-rod, female, for brake control unit, right-hand diameter 15.4 and 19.5 mm. Marked with 1 chamfer.	1
DM 454-13a	Lever with spindle for mechanical control for left-hand brake unit, groove for circlip 1.3 mm wide. Since September 1960. Replaces previous type; order in addition: 1-620.503 (R. VI).	1
DM 454-14	Cranked lever for left-hand brake control unit.	1
DM 454-15a	Lever with spindle for mechanical operation of right-hand brake control unit, groove for circlip 1.3 mm wide. Since September 1960. Replaces previous type, order in addition: 1-620.503 (R. VI).	1
D 454-22	Adjustment wheel, left-hand, 8 teeth, external diameter 28 mm. Since May 1958.	1
D 454-22a	Adjustment wheel, right-hand, 8 teeth, external diameter 28 mm. Since May 1958.	1
DM 454-22	Adjustment wheel, left-hand, 10 teeth. Until May 1958.	1
DM 454-22a	Adjustment wheel, right-hand. 10 teeth. Until May 1958.	1
DM 454-33	Pawl on left-hand brake control unit (R. VI). Until May 1958.	1
DM 454-33a	Pawl on right-hand brake control unit (R. VI). Until May 1958.	1
DS 454-33	Pawl on left-hand brake control unit (R. VI). Since October 1961. Replaces type fitted from May 1958 to October 1961; order in addition: 1-DS 451-31.	1
DS 454-33a	Pawl on right-hand brake control unit (R. VI). Since October 1961. Replaces type fitted from May 1958 to October 1961; order in addition: 1-DS 451-31a.	1
D 454-35	Locking pin, 9.5 x 44.5. Since May 1958.	2

NUMBER	DESCRIPTION	No. OFF
DM 454-35	Locking pin. Until May 1958.	2
D 454-71	Pin for control lever, threaded 5 diameter, 75 pitch, 20 mm long.	2
D 454-72	Return spring for control lever, external diameter 14.2 mm.	2
D 454-74	Stop pin, 5 diameter x 28 long, for spring on locking pin (R. VI).	2
D 454-77	Spring for plunger on locking pin external diameter 4.5 mm.	2
D 454-78	Locking spring, external diameter 7.5 mm.	2
D 454-79	Plunger in locking pin, 4.8 x 7.5 (R. VI).	2
DM 454-89a	Circlip retaining male plunger.	2
D 454-93	Disc for plunger spring in locking pin, 7.5 mm diameter, 1 mm thick.	2
D 454-94	Guide bush for locking pin, 9.5 x 13 x 29 (R. VI).	2
D 454-118	Nut, hex., 5 diameter 75 pitch, on pin for control lever (R. VI).	2
DM 454-142	Eccentric bush for control lever adjustment, internal diameter 7.25 mm.	2
D 454-160	Spacing washer, upper, for mechanical control lever, right-hand, 20 x 32 x 4.	1
125-S	Screw, round head, 5 diameter x 15 long, for control lever return spring anchorage (R. III).	2
125-S 30	Screw, round head, pointed, 5 diameter x 15 long, securing brake cooling duct (R. III). Until September 1962.	2
295-S 30	Screw, hex. head, pointed, 5 diameter x 16 long, securing duct (R. III). Since September 1962.	4
362-S	Circlip, 18 x 24 x 1.5, for mechanical control lever spindle (R. III). Until September 1960.	2
480-S	Screw, hex. head, 7 diameter x 14 long, securing front adjustable support (R. III).	4

NUMBER	DESCRIPTION	No. OFF
487-S	Screw, hex. head, 7 diameter x 25 long, securing eccentric bush for control lever adjustment (R. III).	2
2.301-S	Nut, hex., 12 diameter x 125 pitch, securing front adjustable support (female part) (R. III).	4
2.323-S	Nut, hex., 5 diameter 75 pitch (R. III) for screw:	
	- for locking brake segment.	4
	- anchoring control lever return spring.	2
2.491-S	Nut, hex., 7 diameter 100 pitch, securing front adjustable support, (R. III).	4
2.741-S	Screw, P.K. round head, 4.85 x 9.5 securing brake cooling duct (R. VI). Until September 1962.	4
2.746-S	Screw, P.K. round head, 4.85 x 16, securing duct (R. VI). Since September 1962.	2
615.710	Nut clips, securing brake cooling duct (R. VI). Until September 1962.	4
615.725	Cage nut, securing duct (R. VI). Since September 1962.	4
615.745	Nut clips, securing duct (R. VI). Since September 1962.	2
619.096	Washer, lower, for mechanical control levers, 20 x 32 x 1 (R. II).	2
619.097	*Washer, upper, for right-hand mechanical control lever, 20 × 32 × 4 (R. II). Until October 1956. Replaced by D 454-160.*	1
620.066	Needle roller bearing for cradle 20 x 26 x 16 (R. VI).	4
620.503	Circlips locking mechanical control lever (R. VI). Since September 1960.	2
621.048	Screw, hex. head, pointed, 5 diameter x 75 pitch, 22 long, for locking plate carrying brake lining (R. II).	4
621.054	Screw, hex. head. pointed, 5 diameter x 35 long, for locking guide plate for moving carrier (R. II).	4

The numbers underlined indicate new parts and do not appear on the illustrations.

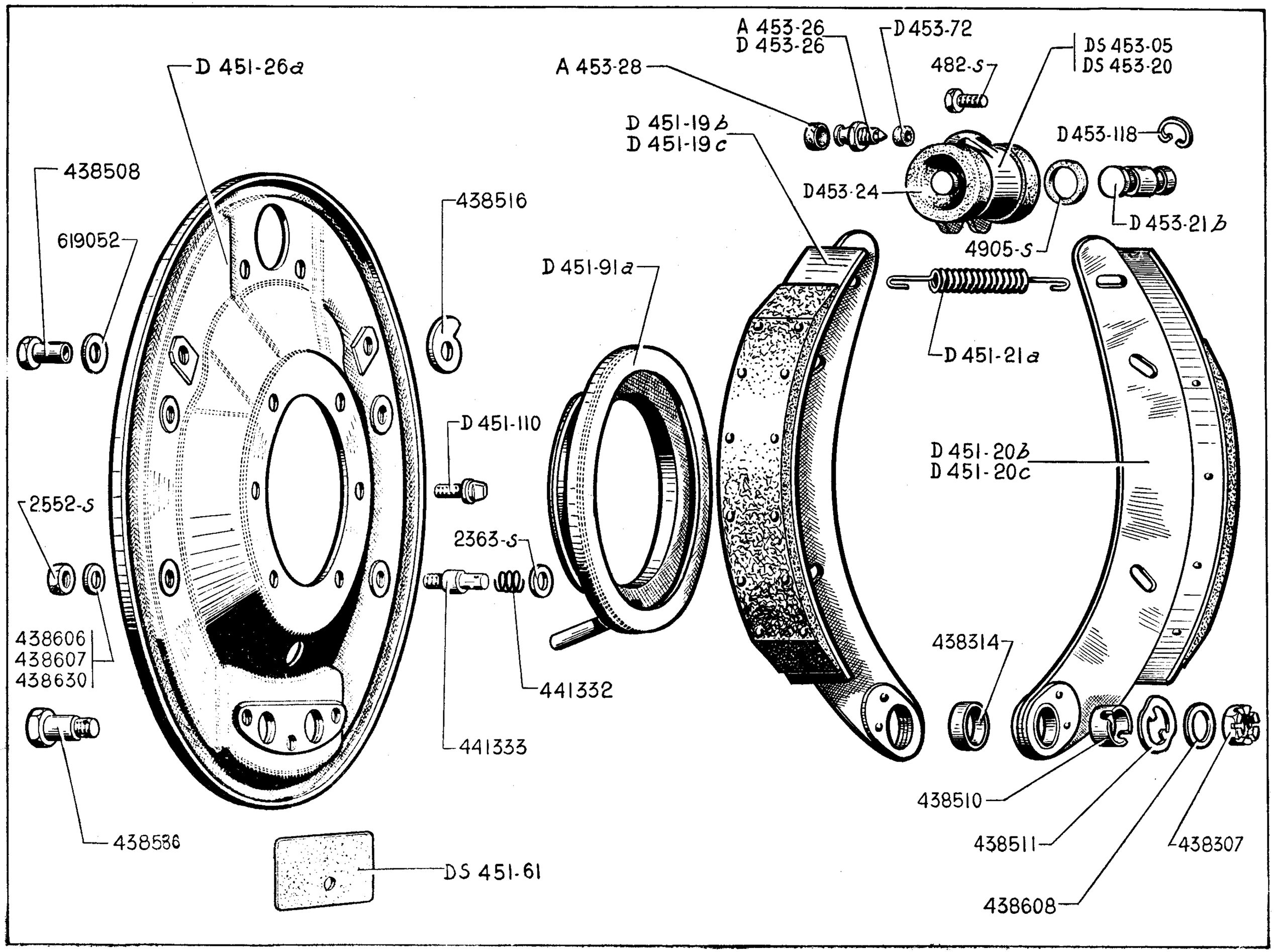
D 451-26a
A 453-28
A 453-26
D 453-26
D 453-72
482-s
DS 453-05
DS 453-20
D 451-19b
D 451-19c
D 453-118
438508
D453-24
438516
D 453-21b
619052
4905-s
D 451-91a
D 451-21a
D 451-110
D 451-20b
D 451-20c
2552-s
2363-s
438606
438607
438630
438314
441332
441333
438510
438511
438307
438608
438586
DS 451-61

NUMBER	DESCRIPTION	No. OFF
	Until December 1957	
A 453-26	Bleed screw for rear brake cylinder. Since July 1957.	2
A 453-28	Rubber cap for bleed screw on brake cylinder (R.VI).	2
D 451-19b	Brake shoe front, left hand, lining 180 mm. long.	1
D 451-19c	Brake shoe front, right hand, lining 180 mm. long.	1
D 451-20b	Brake shoe rear, left hand, lining 146 mm. long.	1
D 451-20c	Brake shoe rear, right hand, lining 146 mm. long.	1
D 451-21a	Return spring for brake shoes, external diameter 14 mm.	2
D 451-26a	Brake shoe rear, right hand and left hand, diameter 277 mm.	2
DS 451-61	Sealing plate rubber for brake backplate 31 x 45. Since February 1957.	2
D 451-91a	Oil drain ring for rear brake with drain tube, diameter 85 x 134.	2
D 451-110	Screw 7 diameter 100 pitch 23 mm. long securing brake backplate.	12

NUMBER	DESCRIPTION	No. OFF
DS 453-05	Cylinder complete for rear brake (with pointed bleed screw).	2
DS 453-20	Cylinder only,, for rear brake, internal diameter 18 mm.	2
D 453-21b	*Piston for rear brake cylinder, external diameter 18 mm. Replaced by DS 453-21a; order in addition: 1-DM 453-24.*	2
D 453-24	Dust cover, rubber for brake cylinder 9.5 x 27.	4
D 453-26	Bleed screw for rear brake cylinder. Until July 1957.	2
D 453-72	Washer for bleed screw on rear brake cylinder, 4.5 mm. diameter (R.VI). Until July 1957.	2
D 453-118	Circlip for rear brake cylinder, 1.1 mm. diameter wire.	2
482-S	Screw, hex. head 7 diameter 12.5 securing cylinder on backplate (R.III).	4
2.363-S	Washer, 6.5 x 14 x 1.5 for brake shoe adjustment (R.III).	16
2.552-S	Nut, hex. 8 diameter 125 pitch, securing guide pins (R.III).	8
4.905-S	Ring seal 12.1 x 17.5 x 2.7 for rear brake cylinder (R.VI).	4
438.307	Nut, hex. 14 diameter 150 pitch on anchor pin (R.II).	4

NUMBER	DESCRIPTION	No. OFF
438.314	Bush, 20 x 22 x 10 for brake shoe (R.VI).	4
438.508	Pin for brake shoe adjustment cam, 21 mm. long (R.II).	4
438.510	Bush, 16 x 20 x 13.6 for brake shoe adjustment (R.II).	4
438.511	Spacing washer on brake shoe anchor pin (R.II).	4
438.516	Cam for brake shoe adjustment, hole 10.5 x 12 (R.II).	4
438.586	Anchor pin for brake shoes 38.5 mm. long, machined part 19 mm. (R.II).	4
438.606	Washer 8.5 x 18 x 0.5 for adjusting guide pins for brake shoes. (R.II).	As nec.
438.607	Washer 8.5 x 18 x 0.2 for adjusting guide pins for brake shoes (R.II).	As nec.
438.608	Washer 14.5 x 24 x 1 for adjustment of anchor pin (R.II).	As nec.
438.630	Washer 8.5 x 18 x 1 for adjustment of guide pins for brake shoes (R.II).	As nec.
441.332	Spring for brake shoe guide pin (R.II).	8
441.333	Guide pin for brake shoe 47 mm long (R.II).	4
619.052	Washer, Bellville type for cam spindle (R.VI).	4

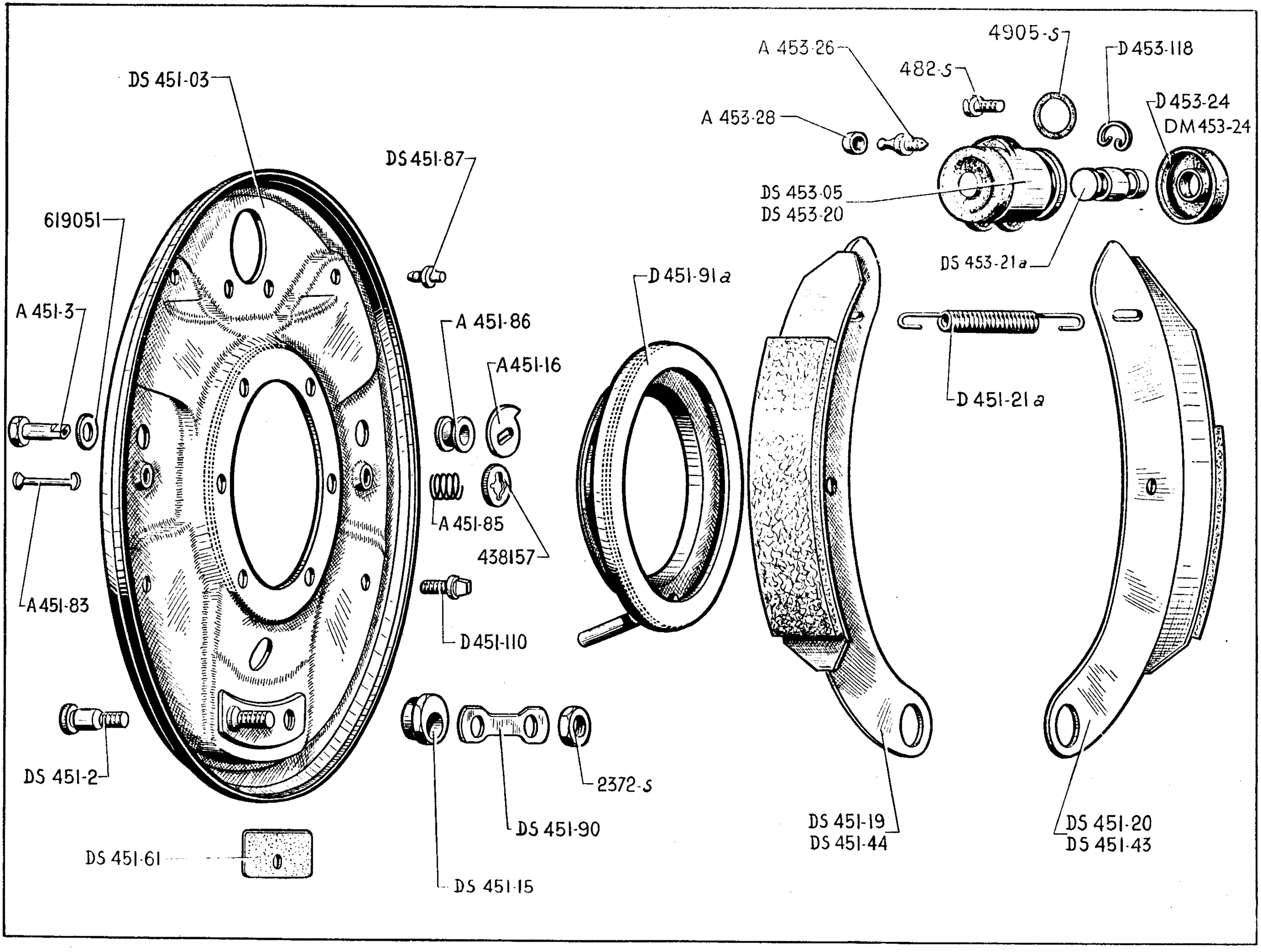
DS 451-03
619051
A 451-3
A 451-83
DS 451-2
DS 451-61
DS 451-87
A 451-86
A451-16
A 451-85
438157
D 451-110
DS 451-15
DS 451-90
2372-S
D 451-91a
DS 451-19
DS 451-44
A 453-26
A 453-28
482-S
4905-S
D 453-118
D 453-24
DM 453-24
DS 453-05
DS 453-20
DS 453-21a
D 451-21a
DS 451-20
DS 451-43

NUMBER	DESCRIPTION	No. OFF
	Since December 1957	
A 451-3	Pin. hex. head (machined part 15.4 mm. 9 mm. diameter) for brake adjustment cam.	4
A 451-16	Brake shoe adjustment cam, 32 mm. wide.	4
451-83	Guide pin for brake shoe spring, total length 35 mm.	4
A 451-85	Spring for brake shoe, 18 mm. diameter (R.VI).	4
A 451-86	Distance piece for brake shoe adjustment cam 9 mm. diameter 10 mm. high.	4
A 453-26	Bleed screw for brake cylinder	2
A 453-28	Rubber cap for brake cylinder bleed screw (R.VI).	2
DS 451-03	Brake backplate, 303 mm. diameter with fixed pins.	2
DS 451-2	Fixed pin for brake shoes 12 mm. diameter 26 mm. long.	2
DS 451-15	Eccentric for brake shoe adjustment 7 mm. thick.	4
DS 451-19	Brake shoe, front, left hand, lining 175 mm. long.	1
DS 451-20	Brake shoe, rear, left hand, lining 132 mm long.	1
D 451-21a	Return spring for brake shoes, external diameter 14 mm.	2
DS 451-43	Brake shoe, rear, right hand, lining 132 mm. long.	1
DS 451-44	Brake shoe, front, right hand, lining 175 mm. long.	1
DS 451-61	Rubber plate for backplate 31 x 45.	2
DS 451-87	Guide pin for brake shoe.	8
DS 451-90	Lockwasher, double 10.5 mm. diameter 40 mm. between for eccentrics adjusting brakes.	2
D 451-91a	Oil drain ring for brake with drain tube 85 x 134.	2
D 451-110	Screw, 7 diameter 23 long, securing brake backplate.	12
DS 453-05	Brake cylinder complete (with pointed bleed screw).	2
DS 453-20	Brake cylinder, only internal diameter 18 mm.	2
DS 453-21a	Piston for brake cylinder, external diameter 18 mm. Since October 1959. Replaces earlier type, order in addition: 1-DM 453-24.	2
D 453-24	Dust cover, rubber, for cylinder 9.5 x 27. Until October 1959.	4
DM 453-24	Dust cover, rubber, for cylinder 8 x 27. Since October 1959.	4
D 453-118	Circlip retaining brake cylinder, wire diameter 1.1 mm.	2
482-S	Screw, hex. head 7 diameter 12.5 long securing brake cylinder on backplate (R.III).	4
2.372-S	Nut, hex. 9 diameter 125 pitch for brake adjustment eccentrics (R.III).	4
4.905-S	Ring seal 12.1 x 17.5 x 2.7 for cylinder (R.VI).	4
438.157	Retaining cap for brake shoe spring internal diameter 19 mm. (R.II).	4
619.051	Washer, Bellville type 9.5 x 27 for adjustment cam (R.VI).	8

130-SUSPENSION PUMP

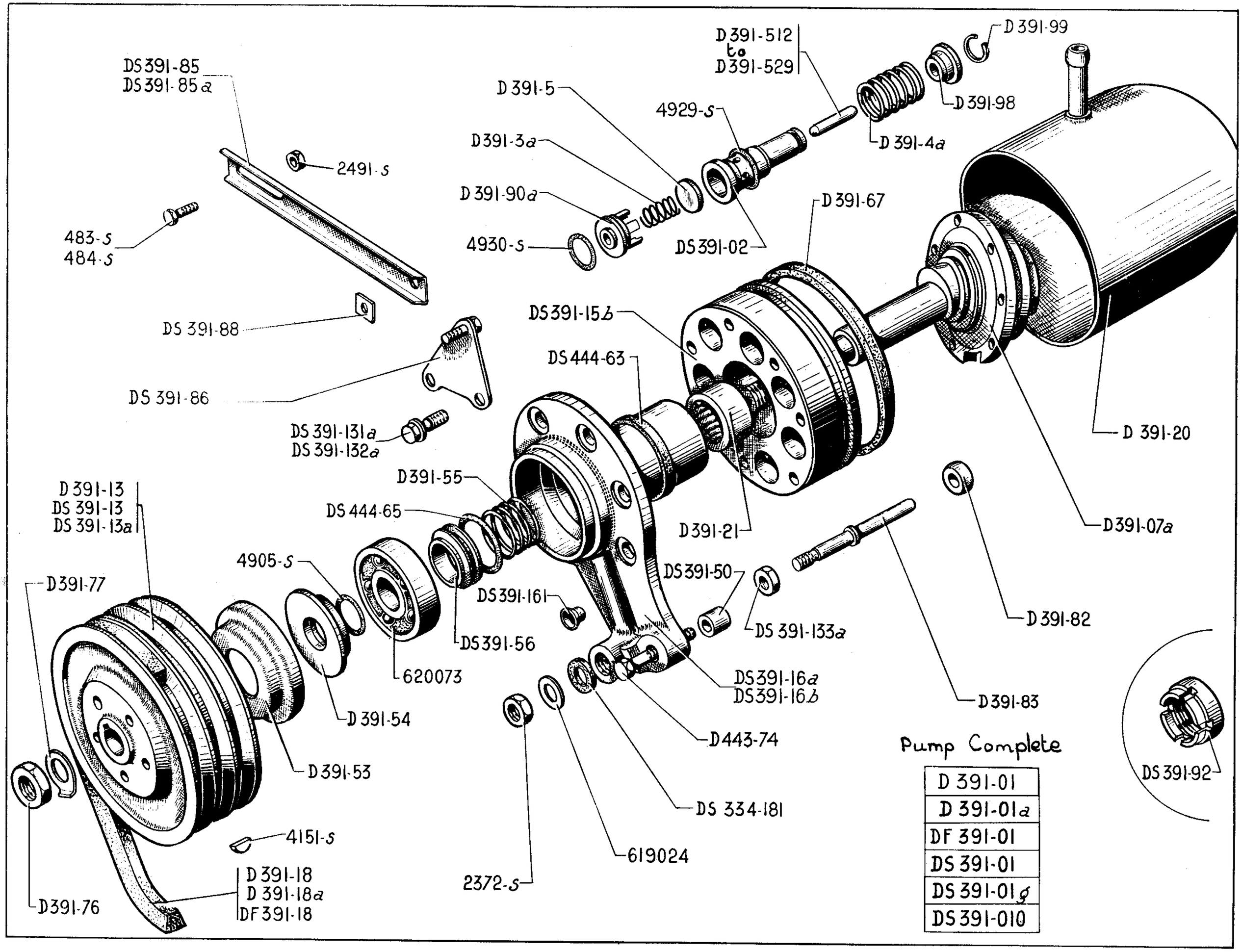

Pump Complete

D 391-01
D 391-01a
DF 391-01
DS 391-01
DS 391-01g
DS 391-010

NUMBER	DESCRIPTION	No. OFF
DS 314-74	Adjusting stay for pump, 180 mm long. Since January 1962.	1
DS 334-181	Rubber joint, 10.5 x 15.9 x 2.7, for pivot pin (R. VI). Until September 1958.	2
D 391-01	*High pressure pump complete. Until February 1956. Replaced by DS 391-010; order in addition: 1-D 232-78, 1-1065-S (R. III). See note MR 4-112-10.*	1
D 391-01a	*High pressure pump complete with bracket D 391-86b. February 1956 - July 1956. Replaced by DS 391-010; order in addition: 1-D 391-13.*	1
DF 391-01	High pressure pump complete (fixing and pressure outlet separate). September 1958 - September 1960.	1
DS 391-01	*High pressure pump complete with double grooved pulley. July 1956-September 1958. Replaced by DS 391-010.*	1
DS 391-01g	High pressure pump complete (pulley with grooves). Since September 1960.	1
DS 391-02	Cylinder and piston, collar diameter 18.5 mm and 20 mm. Since November 1958.	7
D 391-07a	Shaft with bearing. Until April 1962.	1
DS 391-07b	Pump shaft with bearing (nut for securing bearing 10.5 mm thick). Since April 1962.	1
DS 391-010	High pressure pump DF 391-01 with parts for adapting to replace pump DS 391-01.	1
D 391-3a	Valve spring, external diameter 8 mm.	7
D 391-4a	Return spring for piston, external diameter 21 mm.	7
D 391-5	Pump valve, 1.2 mm thick, 13 mm diameter.	7
D 391-13	Pulley, external diameter 106 mm. Until July 1956.	1
DS 391-13	*Pulley, double groove, external diameter 106 mm. July 1956 - September 1960. Replaced by DF 391-13.*	1

NUMBER	DESCRIPTION	No. OFF
DS 391-13a	Pulley, 3 grooves for suspension pump. Since September 1960.	1
DS 391-15b	Pump body, internal groove diameter 22 mm. Since November 1958.	1
DS 391-16a	*End plate bearing for pump shaft. Until September 1958. No longer supplied.*	1
DS 391-16b	End plate bearing for pump shaft. September 1958 - June 1962.	1
DS 391-16e	Bearing end plate for pump shaft with bush. Since June 1962.	1
D 391-18	Belt for driving pump (R. VI): - February 1956 - July 1956. - July 1956 - September 1960.	 1 2
D 391-18a	Belt for driving pump (R. VI). Until February 1956.	1
DF 391-18	Belt for driving pump (R. VI). Since September 1960.	2
D 391-20	Pump cover.	1
D 391-21	Needle bearing race, 17.6 x 28 x 15, (R. VI). Until June 1962.	1
DS 391-50	Distance piece, 9 x 16 x 20, securing pump for assembly of pump DF-391-01 on gearbox housing with 16 mm diameter hole.	1
D 391-53	Sealing cup, 21.5 x 55.5.	1
D 391-54	Pump deflector, 12.1 x 44 x 5.4.	1
D 391-55	Seal retaining spring, external diameter 22.5 mm.	1
DS 391-56	Seal carrier ring for pump, 18 x 27 x 9.	1
D 391-67	Rubber joint between cover and pump body, 80 x 84.5 x 3.4.	1
D 391-76	Nut, hex., 12 diameter x 125 pitch, for pulley (R. VI).	1

NUMBER	DESCRIPTION	No. OFF
D 391-77	Lockwasher 12.2 diameter for pump pulley nut.	1
D 391-82	Ball for locking rod, inside, internal diameter 7 mm. thickness 9 mm.	1
D 391-83	Locking rod, 7 mm diameter 84.5 mm. long	1
DS 391-85	Adjusting stay, for pump, 152.5 mm. long. October 1956-September 1958. Replaces earlier type, order in addition 1-DS 391-86, 2-DS 391-88, 1-484-S (R.III).	1
DS 391-85a	Adjusting stay for pump, 137 mm long. September 1958-January 1962.	1
DS 391-86	Bracket locking belt stay (straight). Since October 1956. Replaces earlier type, order in addition 1-DS 391-85, 2-DS 391-88, 1-484-S (R.III).	1
DS 391-88	Bearing plate for pump stay 15 x 15 x 3. Since October 1956.	2
D 391-90a	Distance piece for cylinder, internal diameter 8 mm. external diameter 21 mm.	7
DS 391-92	Ring nut 34 diameter 125 pitch, external diameter 39.5 mm. Until July 1957.	1
D 391-98	Cup for piston spring, internal diameter 8.5 mm. external diameter 21 mm.	7
D 391-99	Circlip (wire diameter 1 mm.)	7
DS 391-131a	Screw, hex. head 8 diameter 25 long, securing end bearing plate.	4
DS 391-132a	Screw, hex. head 8 diameter 23 long, securing end bearing plate.	2
DS 391-133a	Nut, hex., 8 diameter x 100 pitch, securing end bearing plate.	1

The numbers underlined indicate new parts and do not appear on the illustrations.

132-SUSPENSION PUMP

NUMBER	DESCRIPTION	No. OFF
DS 391-161	Reducing bush for assembly of 6.35 mm. diameter pipe between pump and control valve (assembly with fittings D 392-90)	As nec.
	Piston rod for suspension pump:	7
D 391-512	Length 28.8	
D 391-513	" 28.9	
D 391-514	" 29	
D 391-515	" 29.1	
D 391-516	" 29.2	
D 391-517	" 29.3	
D 391-518	" 29.4	
D 391-519	" 29.5	
D 391-520	" 29.6	
D 391-521	" 29.7	
D 391-522	" 29.8	
D 391-523	" 29.9	
D 391-524	" 30	
D 391-525	Length 30.1	
D 391-526	" 30.2	
D 391-527	" 30.3	
D 391-528	" 30.4	
D 391-529	" 30.5	
D 443-74	Screw 9 diameter 50 long, securing pump on gearbox casing. Since September 1958.	1
DS 444-63	Ring seal 27.7 x 33.1 x 2.7 between pump body and bearing end plate (R.VI).	1
DS 444-65	Ring seal 21.3 x 28.5 x 3.6 on carrier between bearing end plate and body.	1
483-S	Screw, hex. head 7 diameter 15 long securing pump stay (R.III). Until October 1956.	1
484-S	Screw, hex. head 7 diameter 17.5 long securing pump stay (R.III). Since October 1956.	1
2.372-S	Nut, hex. 9 diameter 125 pitch, securing pump (R.III).	1
2.491-S	Nut, hex. 7 diameter 100 pitch, securing pump stay (R.III).	1
4.151-S	Woodruff key 3 x 3.7 x 10 for pump pulley (R.III).	1
4.905-S	Ring seal 12.1 x 17.5 x 2.7 between deflector and pump shaft (R.VI).	1
4.929-S	Ring seal 18.7 x 22.5 x 1.9 for cylinders (R.VI). Since November 1958.	7
4.930-S	Ring seal 15.7 x 21.1 x 2.7 for pump (R.VI).	7
619.024	Washer 10 x 20 for pump pivot pin (R.II). Until September 1958.	1
620.073	Ball bearing 12 x 50 x 16 (R.VI).	1

134-SUSPENSION-CONTROL VALVE-ACCUMULATORS-RESERVOIR-DISTRIBUTION UNIT

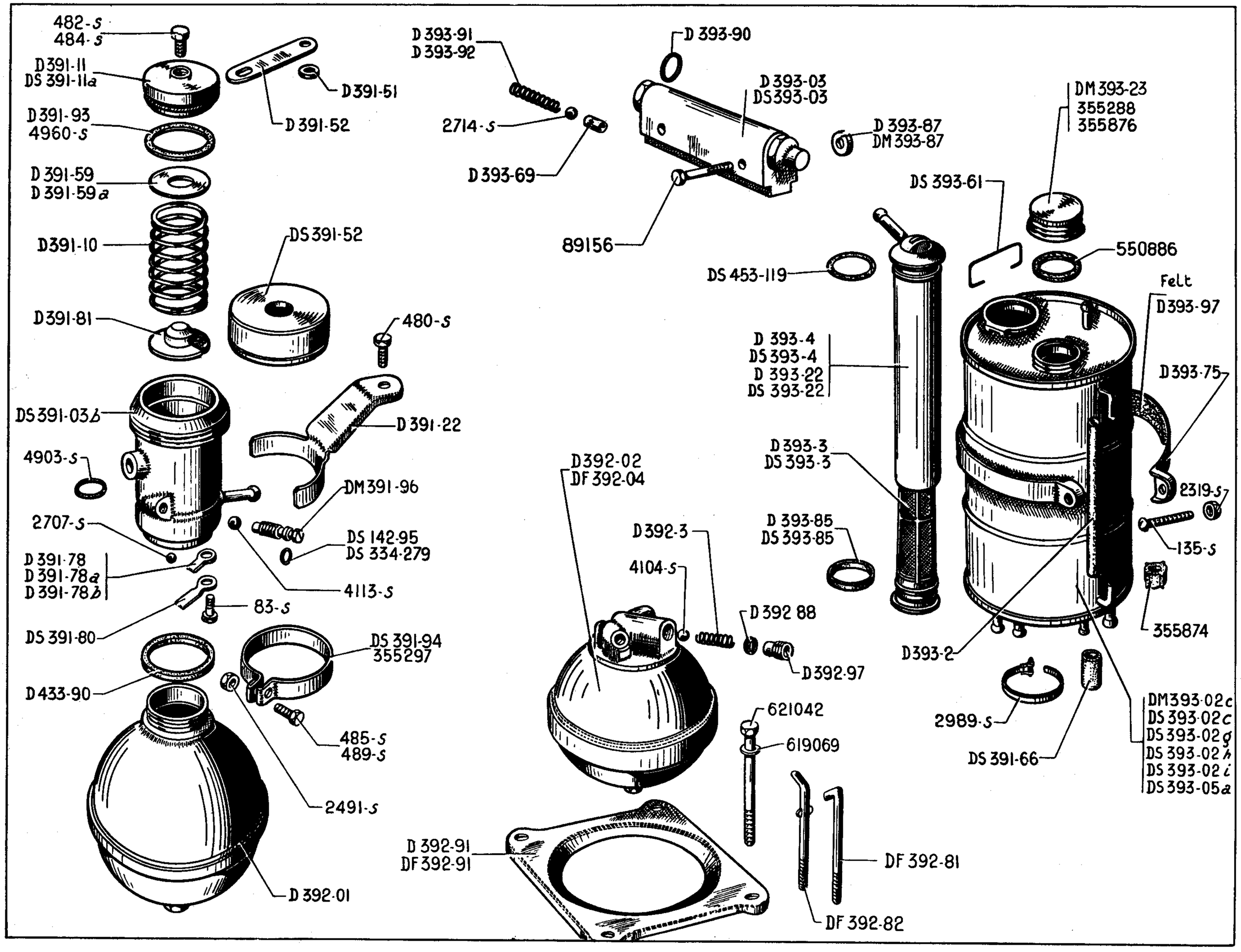

NUMBER	DESCRIPTION	No. OFF
DS 142-95	Ring seal, 5.7 x 9.1 x 1.7, for bleed screw on pressure control valve (R. VI). Until July 1957.	1
DS 334-279	Ring seal, 6.7 x 10.5 x 1.9, for bleed screw on pressure control valve (R. VI). Since July 1957.	1
DS 391-03b	Pressure control valve with nut for tightening cap (marked 1 groove on nut). Since December 1960. Replaces earlier types. For fitting on models until September 1958; order in addition: 1-DS 391-84a, 1-DS 391-161, 1-D 392-90, 1-484-S (R. III).	1
DS 391-10	Spring for pressure control valve, external diameter 34 mm.	1
D 391-11	Cap for pressure control valve, threaded 46 diameter x 150 pitch. Until December 1960.	1
DS 391-11a	Cap for pressure control valve, 42 mm diameter 18.5 mm thick (marked with 1 groove). Since December 1960.	1
D 391-22	Bracket for pressure control valve. Until September 1962.	1
D 391-51	Distance piece for plate retaining pressure control valve, 10.5 x 20 x 9.	1
DM 391-51	Support for control valve. Since September 1962.	
D 391-52	Plate retaining pressure control valve, distance between centres 62 mm.	1
DS 391-52	Nut for tightening cap of pressure control valve, threaded 59 diameter x 150 pitch, (marked with one groove). Since December 1960.	1
D 391-59	Washer 20 x 34 x 0.25 for adjustment of pressure control valve.	As nec.
D 391-59a	Washer, 20 x 34 x 1, for adjustment of pressure control valve.	As nec.

NUMBER	DESCRIPTION	No. OFF
DS 391-66	Rubber cap 18 x 42 (for replacement of reservoirs fitted up to January 1957). (R. VI).	1
	Shim for adjustment of pressure control valve thrust spring.	As nec.
D 391-78	Thickness : 0.1	
D 391-78a	" : 0.2	
D 391-78b	" : 0.5	
DS 391-80	Retaining plate for pressure control valve ball.	1
D 391-81	Cup with ball for pressure control valve.	1
D 391-93	Rubber joint, lower 38.6 x 44 x 4.5 for pressure control valve. Until December 1960.	1
DS 391-94	Clip for tightening pressure control valve 58 mm diameter. Since February 1959.	1
DM 391-96	Bleed screw for pressure control valve, 49 mm long.	1
D 392-01	Main accumulator.	1
D 392-02	Brake accumulator. Until July 1960.	2
DF 392-04	Brake accumulator (1 tapped hole 9 diameter 125 pitch). Since July 1960.	1
D 392-3	Spring for brake accumulator, external diameter 8 mm. Until July 1960.	2
	Since July 1960.	1
DF 392-81	Tie-rod securing brake accumulator 74 mm long, threaded 5 diameter x 75 pitch. July 1960 - September 1962.	2
	Since September 1962.	1

NUMBER	DESCRIPTION	No. OFF
DF 392-82	Tie-rod securing brake accumulator 65 mm long, threaded 5 diameter x 75 pitch. Since July 1960.	2
D 392-88	Thrust washer, 10 x 12 x 2.7, for brake accumulator. Until July 1960.	2
	Since July 1960.	1
D 392-91	Flange securing brake accumulators hole centres 116 mm. Until July 1960.	1
DF 392-91	Flange securing brake accumulators hole centres 80 and 94. July 1960-September 1962.	1
DS 392-91	Flange securing brake accumulator, 3 fixing holes. Since September 1962.	1
D 392-97	Screw for brake accumulator thrust spring, threaded 14 diameter x 150 pitch. Until July 1960.	2
	Since July 1960.	1
DM 393-02c	Reservoir complete for pump supply (3 pipes at the lower part), 1 pipe at the upper part, return to control valve. September 1960 (few cars).	1
DS 393-02c	Reservoir complete for pump supply (assembly with separate return for correctors). January 1957 - July 1960. Replaces earlier types; order in addition: 1-DS 391-66 (R. VI). 1-2.989-S (R. VI). For type fitted until October 1956, order in addition: 1-DS 314-87.	1
DS 393-02g	Reservoir complete for pump supply (4 pipes at the lower part) 1 pipe at the upper part, return to control valve. Since September 1960.	1
DS 393-02h	Reservoir complete (same as DS 393-02g), inscription in English. Since September 1960.	1

The numbers underlined indicate new parts and do not appear on the illustrations.

NUMBER	DESCRIPTION	No. OFF
DS 393-02i	Reservoir complete (same as DS 393-02g), inscription in Spanish. Since June 1961.	1
D 393-03	Pressure distribution block, 5 ways. Until July 1960.	1
DS 393-03	Pressure distribution block, 3 ways. Since July 1960.	1
DS 393-05a	Reservoir complete for pump supply (3 pipes at the lower part, 1 pipe at the upper part, return to corrector), inscription in English. July 1960 - September 1960.	1
D 393-2	Gauge tube, only on reservoir, nylon, 173 mm long (R. VI).	1
D 393-3	Filter, only for reservoir, height 245 mm, threaded 30 diameter 150 pitch. Until March 1957.	1
DS 393-3	Filter, only for reservoir, nylon, height 224 mm (R. VI). Since March 1957.	1
D 393-4	*Filter complete for reservoir (R. VI). Until March 1957. No longer supplied.*	1
DS 393-4	Filter complete with nylon unit tube for reservoir. Since March 1957.	1
D 393-22	Unit tube, only for reservoir. (R. VI). Until March 1957.	1
DS 393-22	Unit tube, only, nylon, for reservoir (R. VI). Since March 1957.	1
DM 393-23	Cap for reservoir with filter (R. VI). Export. Since June 1960.	1

NUMBER	DESCRIPTION	No. OFF
DS 393-61	Spring retaining nylon tube for reservoir (R. VI). Since March 1957.	1
D 393-69	Plunger for pressure distribution block 8.5 mm long.	2
D 393-75	Strap 15 x 549 securing reservoir.	2
D 393-85	Sealing washer 30 x 34 x 4.5 for reservoir filter (R. VI). Until March 1957.	1
DS 393-85	Sealing washer, rubber 35 x 40 x 5 for reservoir nylon filter (R. VI). Since March 1957.	1
D 393-87	Distance piece 5.5 x 16 x 4 for pressure distribution block. Until July 1960.	2
DM 393-87	Distance piece 5.5 x 16 x 8 for pressure distribution block. Since July 1960.	2
D 393-90	Joint, 16 x 18.8 x 2 for cap of pressure distribution block.	2
D 393-91	Spring for rear suspension valve, internal diameter 6.2 mm.	1
D 393-92	Spring for front suspension valve, internal diameter 7.2 mm.	1
D 393-97	Packing (felt) for reservoir 215 mm long 15 mm wide. Until September 1962.	2
DS 393-97	Packing for strap holding reservoir (rubber), 200 mm long (R. VI). Since September 1962.	2
D 433-90	Joint, rubber, 36 x 40 x 3.7, between control valve and main accumulator.	1
DS 453-119	Ring seal, 37 x 44 x 3.5, for unit tube. Since March 1957.	1
83-S	Screw, countersunk head, 4 diameter 10 long, for retaining plate on control valve (R. III).	1

NUMBER	DESCRIPTION	No. OFF
135-S	Screw, round head, 5 diameter 40 long, securing reservoir (R. III).	2
480-S	Screw, hex. head, 7 diameter 14 long, securing bracket for control valve (R. III).	1
482-S	Screw, hex. head 7 diameter 12.5 long securing control valve on bracket (R. III). Until December 1960.	1
484-S	Screw, hex. head 7 diameter 17.5 long securing control valve on bracket (R. III). Since December 1960.	1
485-S	Screw, hex. head 7 diameter 20 long for clip on control valve (R. III). Until February 1959.	1
489-S	Screw, hex. head 7 diameter 30 long for clip on control valve (R. III). Since February 1959.	1
2.319-S	Nut, hex. 5 diameter 75 pitch, securing reservoir (R. III).	2
2.491-S	Nut, hex. 7 diameter 100 pitch securing clip on control valve (R. III).	1
2.707-S	Ball 6 mm diameter for control valve (fluid passage pump to sphere) (R. VI).	1
2.714-S	Ball 9.52 mm for distribution block (R. VI).	2
2.989-S	Clip P.C. with pin, 245 mm long for cap DS 391-66 (R. VI).	1
4.104-S	Ball 8.5 mm for brake accumulator (R. VI).	1
4.113-S	Ball 7.5 mm for bleed screw on control valve (R. VI).	1

The numbers underlined indicate new parts and do not appear on the illustrations.

NUMBER	DESCRIPTION	No. OFF
4.903-S	Ring seal 8.9 x 12.7 x 1.9 for control valve piston (R. VI).	1
4.960-S	Ring seal 37.5 x 42.4 x 2.45 for plug on control valve (R. III). Since December 1960.	1
89.156	Screw, hex. head 5 diameter 40 long securing distribution block (R. III).	2
355.288	*Outlet plug on reservoir, 16 mm. diameter hole (R. VI). Until March 1957. No longer supplied.*	1

NUMBER	DESCRIPTION	No. OFF
355.297	Clip securing control valve 14 mm wide 56 mm diameter (R. II). Until February 1959.	1
355.874	Joint, rubber 5 x 11 x 30 for gauge tube on reservoir (R. VI).	2
355.876	Cap for reservoir, diameter of vent hole 1.6 mm (R. VI).	1

NUMBER	DESCRIPTION	No. OFF
550.886	Joint, rubber 34 x 45 for reservoir outlet plug and cap (R. VI).	2
619.069	Washer 7.5 x 20 x 1 for screws securing brake accumulator flange (R. II). Until July 1960.	2
621.042	Screw, hex. head 7 diameter 85 long securing flange for brake accumulators (R. II). Until July 1960.	2

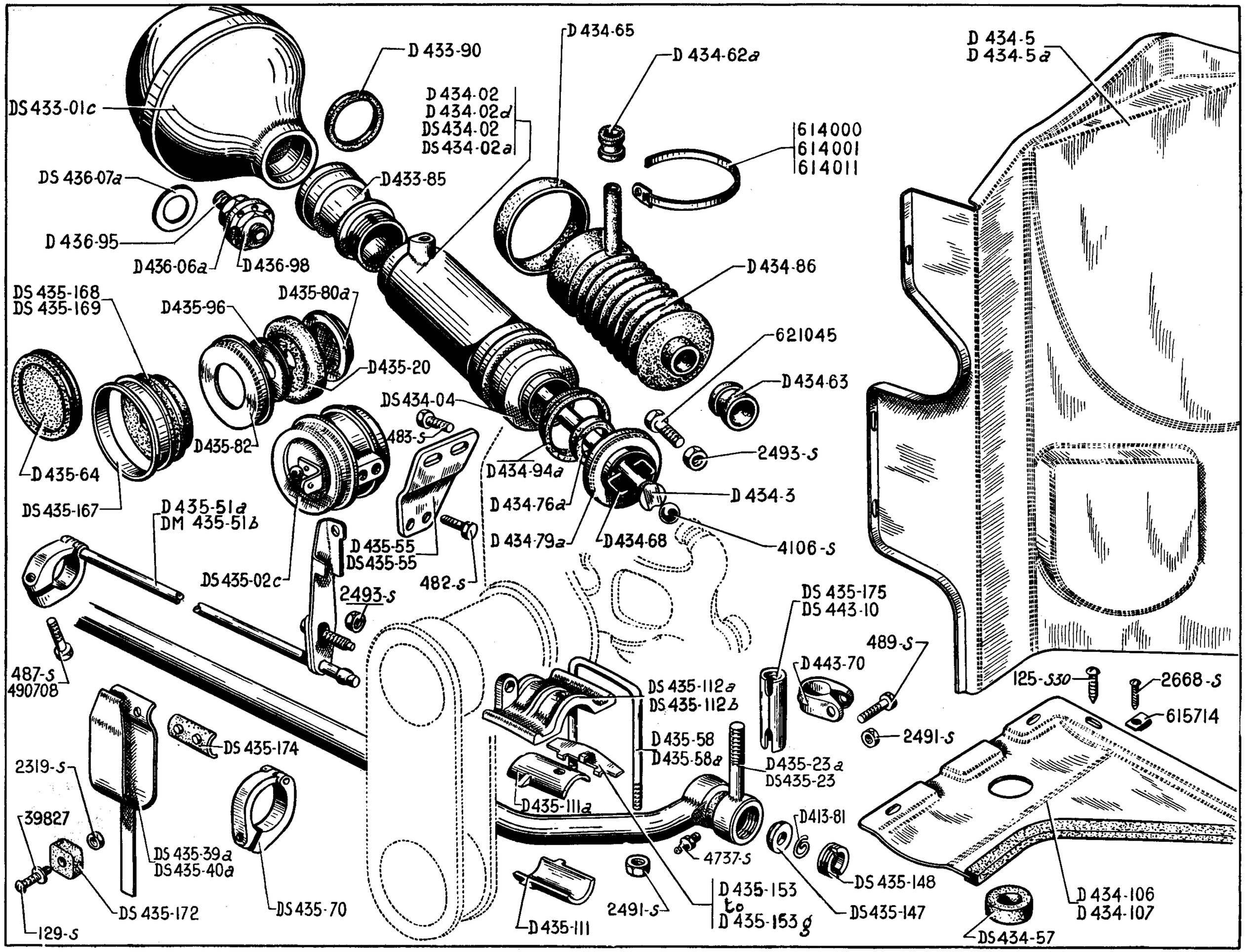
D 433-90
D 434-65
D 434-62a
D 434-5
D 434-5a
DS 433-01c
D 434-02
D 434-02d
DS 434-02
DS 434-02a
614000
614001
614011
DS 436-07a
D433-85
D 436-95
D 436-06a
D 436-98
D 434-86
DS 435-168
DS 435-169
D435-96
D435-80a
621045
D435-20
D 434-63
DS 434-04
483-s
D435-82
2493-s
D 435-64
D 434-94a
D 434-3
DS 435-167
D 435-51a
DM 435-51b
D 434-76a
D 434-79a
D 434-68
4106-s
D 435-55
DS 435-55
DS 435-02c
482-s
2493-s
DS 435-175
DS 443-10
489-s
D 443-70
487-s
490708
DS 435-112a
DS 435-112b
125-s30
2668-s
615714
DS 435-174
D 435-58
D 435-58a
2491-s
2319-s
D 435-23a
DS435-23
D435-111a
39827
D413-81
DS 435-39a
DS 435-40a
4737-s
DS 435-148
DS 435-172
DS 435-70
2491-s
D 435-153
to
D 435-153g
DS435-147
D 434-106
D 434-107
129-s
D 435-111
DS 434-57

NUMBER	DESCRIPTION	No. OFF
D 413-81	Spring for anti-roll bar ball pin, external diameter 25.5 mm. Since October 1959.	2
DS 433-01c	Sphere for suspension (without damper).	2
D 433-85	Sleeve for suspension sphere, left hand, threaded 36 diameter 150 pitch.	1
D 433-90	Joint, rubber 36 x 40 x 3.7 between cylinder and suspension sphere.	3
D 434-02	*Suspension cylinder, left-hand. Until May 1958. Replaced by DS 434-02; order in addition: 1-DS 435-30a, 1-DS 435-35, 1-DS 435-36, 2-D 391-105, 2-614.007 (R. VI).*	1
D 434-02d	*Front suspension cylinder, right-hand. Until May 1958. Replaced by: DS 434-02a; order in addition: 1-DS 435-146.*	1
DS 434-02	Front suspension cylinder, left hand. Since May 1958.	1
DS 434-02a	Front suspension cylinder, right hand. Since May 1958.	1
DS 434-04	Nut with cup and joint 54 diameter 150 pitch, for suspension cylinder.	2
D 434-3	Suspension piston rod with pin.	2
D 434-5	Shield for suspension mechanism, left hand (Lateral portion).	1
D 434-5a	Shield for suspension mechanism, right hand (Lateral portion).	1
DS 434-57	Washer, rubber, sealing suspension mechanism 20 x 44 x 13.	2

NUMBER	DESCRIPTION	No. OFF
D 434-62a	Protective ring under clip on return from cylinder to reservoir, internal diameter 11.5 mm.	2
D 434-63	Protective ring under clip tightening rubber dust cover on cylinder (control lever side) internal diameter 25mm.	2
D 434-65	Protective ring under clip tightening rubber dust cover on cylinder (cylinder side).	2
D 434-68	Pin connecting piston rod with lever (2 mm diameter wire).	2
D 434-76a	Sealing washer, felt, 34.5 x 46.5 x 6 for suspension cylinder.	2
D 434-79a	Cup for front suspension cylinder.	2
D 434-86	Dust cover, rubber, for cylinder, internal diameter 19 mm and 52 mm.	2
D 434-94a	Sealing joint for cylinder (34.4 x 44.5).	2
D 434-106	Protection shield for suspension mechanism, left hand (lower part).	1
D 434-107	Protection shield for suspension mechanism, right hand (lower part).	1
DS 435-02d	Height corrector (with rapid return). Since May 1962. Replaces DS 435-02c.	1
D 435-20	Diaphragm for corrector, external diameter 54 mm. Until May 1962.	2
DS 435-20	Diaphragm for height corrector, 3 mm hole on 6.2 mm length. Since May 1962.	2

NUMBER	DESCRIPTION	No. OFF
DS 435-23	Anti-roll bar with end pieces 1 threaded 14 diameter x 125 left-hand pitch, 1 threaded 14 diameter x 125 right-hand pitch. Since February 1962. Replaces D 435-23a; order in addition: 1-DS 435-175.	1
DS 435-39a	Anti-rattle spring, left-hand for anti-roll bar. Since May 1958.	1
DS 435-40a	Anti-rattle spring, right-hand for anti-roll bar. Since May 1958.	1
DS 435-45	Valve for height corrector, 5.85 x 25 x 0.20 (R. VI). Since May 1962.	2
DS 435-46	Spring for height corrector valve. Since May 1962.	2
D 435-51a	*Control rod complete for corrector (arrangement with manual height variable control). Until November 1957. Replaced by DM 435-51b.; order in addition: 1-DM 435-112 (R. VI), 1-D 437-101, 1-2.319-S (R. III).*	2
DM 435-51b	Rod complete controlling corrector. Since November 1957.	1
D 435-55	Corrector bracket, 2 slots 7.75 mm. Until April 1959.	1
DS 435-55	Corrector bracket, holes 7.75 mm to 36 mm between centres. Since April 1959.	1
D 435-58	"U" bolt, front, securing anti-roll bar bearing, 72 mm between centres.	2
D 435-58a	"U" bolt, rear, securing anti-roll bar bearing, 83 mm between centres.	2
D 435-64	Rubber cover for corrector adjustment hole 58 mm diameter, 8 mm thick. Until May 1957.	1
DS 435-70	Collar complete for anti-roll bar thrust.	2

The numbers underlined indicate new parts and do not appear on the illustrations.

NUMBER	DESCRIPTION	No. OFF
D 435-80a	Cup for corrector, diameter 5.5 x 37, thickness 5.5 mm. Until May 1962.	2
D 435-82	Cup for corrector, diameter 32 x 58.5, thickness 12.5 mm. February 1960 - May 1962.	2
DS 435-82	Interior cup for tightening height corrector diaphragm, 4.9 mm thick. Since May 1962.	2
D 435-96	Cup for corrector, diameter 5 x 36, thickness 1.5 mm.	2
D 435-111	Half bearing, cap, lower, (nylon), for anti-roll bar, 54 mm long (R. VI).	2
D 435-111a	Half bearing, cap, upper, (nylon), for anti-roll bar, 52 mm long (R. VI).	2
DS 435-112a	Bearing cap, right-hand, for anti-roll bar with half bearing and dowel. Since November 1956.	1
DS 435-112b	Bearing cap, left-hand, for anti-roll bar with half bearing and dowel. Since November 1956.	1
DS 435-147	Thrust cup and ball pin for anti-roll bar, 26 mm diameter, thickness 5.40 mm.	2
DS 435-148	Nut, tightening anti-roll bar ball pin cup, threaded 30 diameter x 150 pitch.	2
	Shim for adjusting anti-roll bar bearing :	As nec.
D 435-153	Thickness : 1 mm.	
D 435-153a	" 0.95 mm.	
D 435-153b	" 0.90 mm.	
D 435-153c	" 0.85 mm.	
D 435-153d	" 0.80 mm.	
D 435-153e	" 0.75 mm.	
D 435-153f	" 0.70 mm.	
D 435-153g	" 0.65 mm.	
DS 435-167	Sleeve retaining seal for corrector, external diameter 61 mm. Since February 1960.	2
DS 435-168	Rubber sealing cup for corrector (nut side), diameter 49 x 63. Since February 1960.	1

NUMBER	DESCRIPTION	No. OFF
DS 435-169	Rubber sealing cup for corrector (yoke side), diameter 49 x 63 mm, 1 hole 8 mm diameter. Since February 1960.	1
DS 435-172	Lateral rubber stop for anti-rattle spring, 5.5 x 27 x 12. Since May 1958.	2
DS 435-174	Bearing, nylon, for anti-rattle spring, 65 mm long (R. VI). Since May 1958.	2
DS 435-175	Coupling sleeve, right-hand for anti-roll bar, right-hand, threaded 14 diameter x 125 right-hand pitch, 61.5 mm long. Since February 1962.	1
D 436-06a	Damper (without mark). Since November 1961.	2
DS 436-07a	Valve assembly for front damper, comprising one washer and two valves (R. VI).	2
DS 436-95a	Stud, 7 diameter x 30.5 long, for damper. Since June 1962. Replaces D 436-95.	2
D 436-98	Nut, hex., 7 diameter x 100 pitch, for damper. Until June 1962.	4
DS 436-98	Nut, hex., 7 diameter x 100 pitch, 8.2 mm thick for damper. Since June 1962.	4
DS 443-10	Sleeve, adjustable, for anti-roll bar, threaded 14 diameter x 125 left and right-hand pitch, length 80 mm. Since February 1962.	2
D 443-70	Clip securing adjustment sleeve, for anti-roll bar.	1
125-S 30	Screw, round head, pointed, 5 diameter x 15 long, securing shield for suspension mechanism (R. III).	4
129-S	Screw, round head, 5 diameter x 25 long, securing lateral buffer of anti-rattle spring (R. III). Since May 1958.	14
482-S	Screw, hex. head, 7 diameter x 12.5 long, securing corrector on bracket (R. III).	2
483-S	Screw, hex. head, 7 diameter x 15 long, securing corrector bracket (R. III).	2

NUMBER	DESCRIPTION	No. OFF
487-S	Screw, hex. head, 7 diameter x 25 long (R. III) securing:	
	- collar for corrector control rod. Until November 1958.	1
	- collar for anti-roll bar thrust.	2
489-S	Screw, hex. head, 7 diameter x 30 long, securing clip on adjustment sleeve for anti-roll bar (R. III).	4
2.319-S	Nut, hex., 5 diameter x 75 long, securing lateral stop for anti-rattle spring (R. III). Since May 1958.	2
2.491-S	Nut, hex., 7 diameter x 100 pitch (R. III) securing:	
	- clip on adjustment sleeve for anti-roll bar bearing.	4
	- anti-roll bar bearing.	8
2.493-S	Nut, hex., 7 diameter x 100 pitch (R. III) :	
	- for eccentric pin operating corrector.	1
	- for securing cylinder.	4
2.668-S	Screw, P.K. round head, 3.5 x 10, securing shield protecting suspension mechanism (R. VI).	4
4.106-S	Ball, 14.28 diameter for cylinder piston rod (R. VI).	2
4.737-S	Greaser, straight, for anti-roll bar (R. VI). Since June 1961.	2
39.827	Plain washer, 5.2 x 20 x 2, for lateral stop for anti-rattle spring (R. IV). Since May 1958.	2
490.708	Screw, round head, 7 diameter x 22.5 long, for clip for corrector control rod (R. I). Since November 1958.	1
614.000	Clip securing cylinder dust cover, 474 mm long (R. VI).	2
614.001	Clip securing return from cylinder to reservoir, 132 mm long (R. VI).	2
614.011	Clip securing cylinder dust cover (control lever side), 240 mm long (R. VI).	2
615.714	Nut, securing suspension mechanism screen (R. VI).	4
620.525	Circlips for height corrector valve, 5 x 9.85 x 0.6 (R. VI). Since May 1962.	2
621.045	Screw, hex. head, 7 diameter x 28 long, securing cylinder (R. II).	4

The numbers underlined indicate new parts and do not appear on the illustrations.

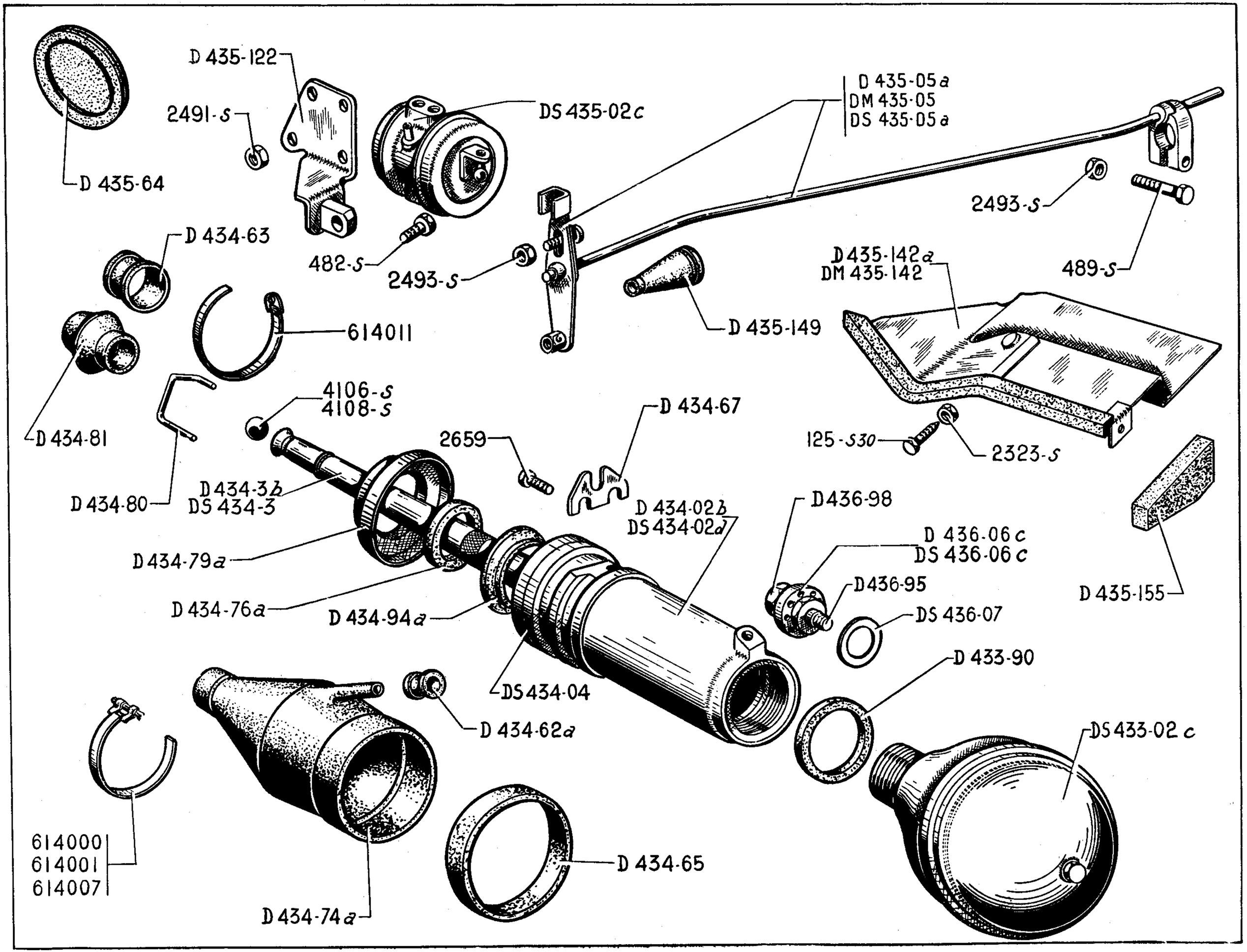
D 435-122
2491-S
D 435-64
DS 435-02c
D 435-05a
DM 435-05
DS 435-05a
2493-S
489-S
D 434-63
482-S
2493-S
D 435-142a
DM 435-142
614011
D 435-149
4106-S
4108-S
D 434-81
D 434-67
2659
125-S30
2323-S
D 434-3b
DS 434-3
D 434-80
D 434-02b
DS 434-02d
D 436-98
D 436-06c
DS 436-06c
D 434-79a
D 436-95
D 435-155
D 434-76a
D 434-94a
DS 436-07
D 433-90
DS 434-04
D 434-62a
DS 433-02c
614000
614001
614007
D 434-65
D 434-74a

NUMBER	DESCRIPTION	No. OFF
DS 433-02c	Sphere for suspension (without damper).	2
D 433-90	Joint, rubber, 36 x 40 x 3.7, between cylinder and sphere.	2
D 434-02b	Suspension cylinder. Until May 1960.	2
DS 434-02d	Suspension cylinder (arrangement with 15.875 mm diameter ball). Since May 1960.	2
DS 434-04	Nut, 54 diameter x 150 pitch, with cup and joint for suspension cylinder.	2
D 434-3b	Piston rod for suspension cylinder. Until May 1960.	2
DS 434-3	Piston rod for suspension cylinder, (arrangement with 15.875 mm diameter ball). Since May 1960.	2
D 434-62a	Protective ring under tightening clip for return from cylinder to reservoir, internal diameter 11.5 mm.	2
D 434-63	Protective ring under tightening clip for piston rod dust cover, internal diameter 25 mm.	2
D 434-65	Flexible protective ring under clip securing dust cover to cylinder (cylinder side).	2
D 434-67	Plate retaining suspension cylinder.	2
D 434-74a	Dust cover, rubber for cylinder, internal diameter 52 mm.	2
D 434-76a	Felt sealing washer for suspension cylinder, 34.5 x 46.5 x 6.	2
D 434-79a	Cup for suspension cylinder.	2
D 434-80	Pin connecting piston rod with lever, 3 mm diameter wire.	2
D 434-81	Rubber dust cover for piston rod.	2

NUMBER	DESCRIPTION	No. OFF
D 434-94a	Sealing joint for cylinder (34.4 x 44.5).	2
DS 435-02d	Height corrector with rapid return. Since May 1962. Replaces DS 435-02c.	1
D 435-05a	Control rod complete for corrector (arrangement with height variation control). Until November 1957.	1
DM 435-05	Control rod complete for rear corrector (arrangement with 17 mm diameter anti-roll bar). Since February 1958.	1
DS 435-05a	Control rod complete for rear corrector (arrangement with ID 19 height variation control). November 1957 - February 1958.	1
D 435-64	Rubber cover for corrector adjustment control, 58 mm diameter, 8 mm thick. Until May 1957.	1
D 435-122	Corrector bracket with bearing.	1
D 435-142a	Protection panel for corrector. October 1956 - February 1958.	1
DM 435-142	Protection panel for corrector. Since February 1958.	1
D 435-149	Sealing sleeve on corrector control rod, 6 x 36 x 60.	1
D 435-155	Sealing pad rubber, between body and corrector protection panel (R. VI). Since October 1956.	1
D 436-06c	*Damper. Until March 1957. Replaced by 2-DS 436-06c.*	2
DS 436-06c	Damper, rear. Since March 1957. External nut marked with 0.8 mm collar, 18.5 mm diameter. Since November 1961.	2
DS 436-07	Rear damper valve assembly (R. VI).	2
DS 436-95a	Stud, 7 diameter x 30.5 long, for damper. Since June 1962. Replaces D 436-95.	2

NUMBER	DESCRIPTION	No. OFF
D 436-98	Nut, hex., 7 diameter 100 pitch, for damper. Until June 1962.	4
DS 436-98	Nut, hex., 7 diameter 100 pitch, 8.2 mm thick for damper. Since June 1962.	4
125-S 30	Screw, round head, pointed, 5 diameter 15 long, securing corrector protection panel (R. III). Since October 1956.	2
482-S	Screw, hex. head, 7 diameter, 12.5 long, securing corrector on bracket (R. III).	2
489-S	Screw, hex. head, 7 diameter 30 long, tightening clip for corrector rod (R. III).	1
2.323-S	Nut, hex., 5 diameter 75 pitch securing corrector protection panel (R. III). Since October 1956.	1
2.491-S	Nut, hex., 7 diameter 100 pitch securing corrector bracket (R. III).	2
2.493-S	Nut, hex., 7 diameter 100 pitch (R. III) securing:	
	- clip for corrector control rod.	1
	- eccentric pin operating corrector.	1
2.659	Screw, hex. head, 5 diameter, 13 long, securing retaining plate for cylinder (R. III).	2
4.106-S	Ball, 14.28 mm diameter for cylinder piston rod (R. VI). Until May 1960.	2
4.108-S	Ball, 15.875 mm diameter for cylinder piston rod (R. VI). Since May 1960.	2
614.000	Clip securing cylinder dust cover, 474 mm long (R. VI).	2
614.001	Clip securing return pipe from cylinder to reservoir, 132 mm long (R. VI).	2
614.007	Clip securing cylinder dust cover 190 mm long (R. VI).	2
614.011	Clip securing piston rod dust cover 240 mm long (R. VI).	2

The numbers underlined indicate new parts and do not appear on the illustrations.

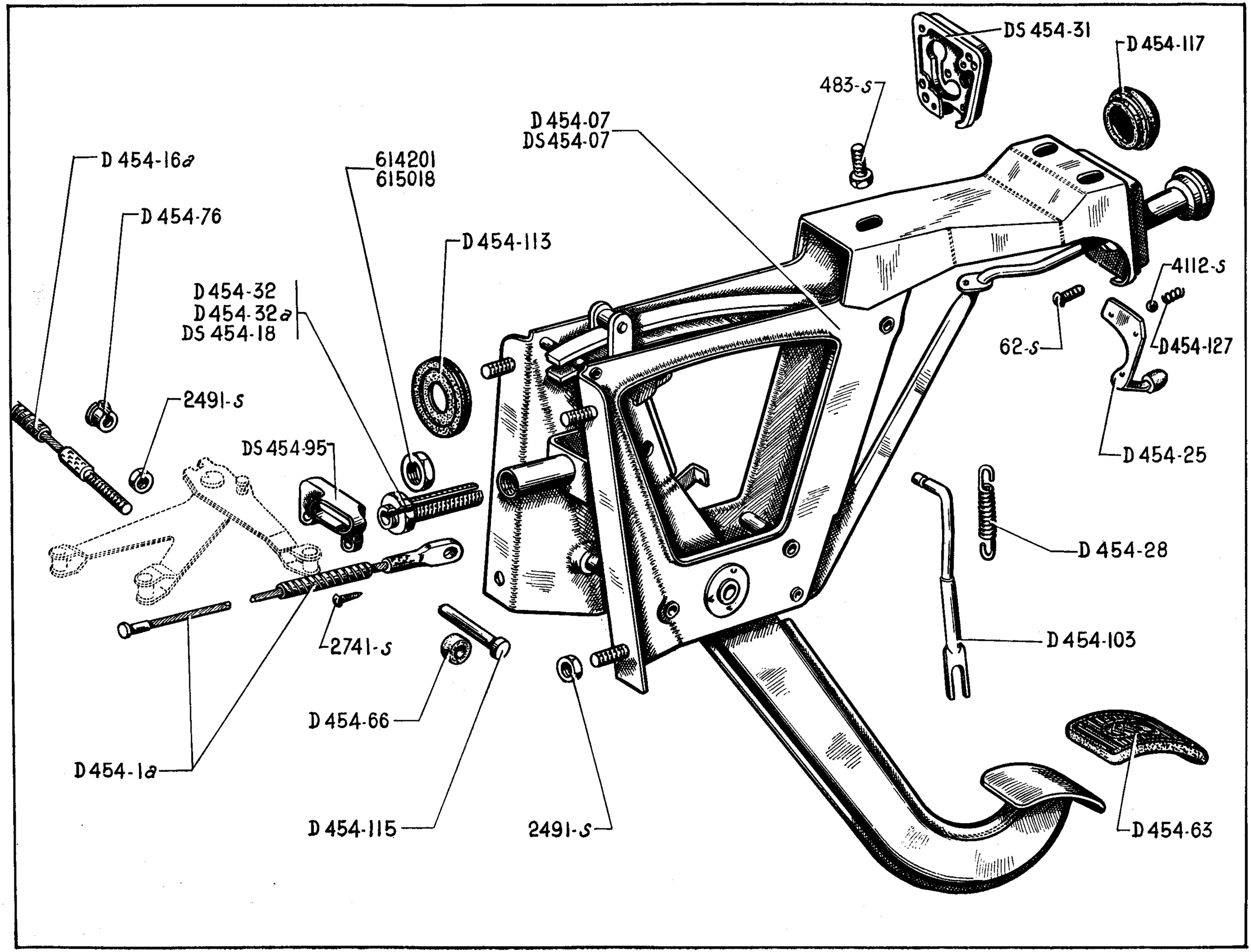
DS 454-31
D 454-117
483-s
D 454-07
DS 454-07
D 454-16a
614201
615018
D 454-76
D 454-113
4112-s
D 454-32
D 454-32a
DS 454-18
62-s
D454-127
2491-s
DS 454-95
D 454-25
D 454-28
2741-s
D 454-103
D 454-66
D 454-1a
D 454-115
2491-s
D 454-63

NUMBER	DESCRIPTION	No. OFF
D 454-07	*Mechanical brake control with pedal and release lever. Until April 1958. Replaced by DS 454-07, order in addition 1-DS 454-18, 1-614.201 (R. II).*	1
DS 454-07	Mechanical brake control with pedal and release lever (threaded for sheath stop 16 diameter 150 pitch). Since April 1958.	1
D 454-1a	Brake cable, 800 mm long.	1
D 454-16a	Brake connecting cable 620 mm long.	1
DS 454-18	Adjustable sheath stop for brake cable, threaded 16 diameter 150 pitch. Since April 1958.	1
D 454-25	Lock for release lever.	1
D 454-28	Return spring for lock, external diameter 10.5 mm.	1
DS 454-31	Positioning grille for locking lever (R. VI).	1
D 454-32	Adjustable sheath stop for brake cable, threaded 14 diameter 150 pitch, 50 mm long, internal diameter 9.5 mm. Until January 1956.	1

NUMBER	DESCRIPTION	No. OFF
D 454-32a	Adjustable sheath stop for brake cable, threaded 14 diameter 150 pitch 50 mm. long internal diameter 10.2 mm. January 1956 - April 1958	1
D 454-63	Pad, rubber for brake pedal.	1
D 454-66	Stop, rubber for brake pedal 7 x 18 x 14.	2
D 454-76	End piece for sheath on connecting brake cable, internal diameter 8.5 mm. length 18 mm.	2
DS 454-95	Eyelet protecting mechanical brake cable (R. VI).	1
D 454-103	Link connecting control lever and lock, 111 mm. long.	1
D 454-113	Grommet, rubber for adjustable stop 17 x 38 x 4.	1
D 454-115	Clevis pin for brake cable 7 mm. diameter 45 mm. long.	1
D 454-117	Cap, rubber, for knob operating brake release, internal diameter 16.5 mm.	1

NUMBER	DESCRIPTION	No. OFF
D 454-127	Spring for ball in release lever, external diameter 3.5 mm (R. VI).	1
62-S	Screw, round head, 4 diameter x 7.5 long, securing grille for positioning brake release lever (R. III).	3
483-S	Screw, hex. head, 7 diameter x 15 long, securing brake operating control (R. III).	3
2.491-S	Nut, hex., 7 diameter x 100 pitch (R. III) securing:	
	- brake control.	4
	- brake connecting cable.	2
2.741-S	Screw, P.K. round head, 4.85 x 9.5, securing eyelet for protection of mechanical brake cable (R. VI).	2
4.112-S	Ball, 3.968 mm diameter for locking release lever (R. VI).	1
614.201	Nut, hex., 16 diameter x 150 pitch, locking adjustable stop (R. II). Since April 1958.	1
615.018	Nut, hex., 14 diameter x 150 pitch, locking adjustable stop (R. II). Until April 1958.	1

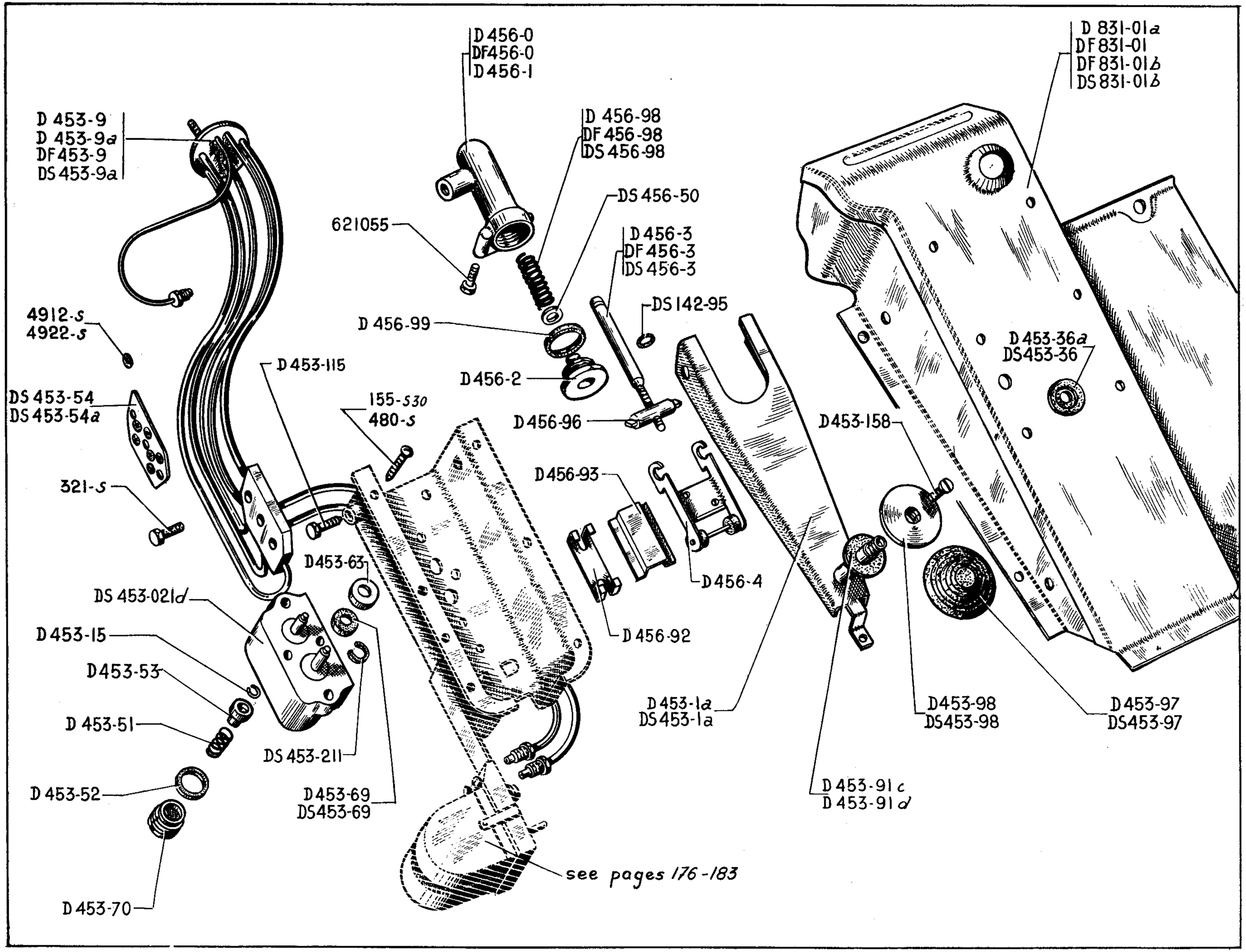
D 456-0
DF456-0
D 456-1
D 831-01a
DF 831-01
DF 831-01b
DS 831-01b
D 453-9
D 453-9a
DF 453-9
DS 453-9a
D 456-98
DF 456-98
DS 456-98
DS 456-50
621055
D 456-3
DF 456-3
DS 456-3
DS 142-95
4912-s
4922-s
D 456-99
D 453-36a
DS453-36
D 453-115
D 456-2
DS 453-54
DS 453-54a
155-530
480-s
D 456-96
D453-158
321-s
D 456-93
D453-63
D 456-4
DS 453-021d
D 456-92
D 453-15
D453-53
D 453-1a
DS453-1a
D453-98
DS453-98
D 453-97
DS453-97
D 453-51
DS 453-211
D 453-52
D 453-69
DS453-69
D 453-91c
D 453-91d
see pages 176-183
D 453-70

NUMBER	DESCRIPTION	No. OFF
DS 142-95	Ring seal, 5.7 x 9.1 x 1.7 for pressure distribution plug (R. VI).	1
DS 453-021d	Brake control body with valves (arrangement with felt joint). Since July 1961. Replaces earlier type; order in addition: 2-DS 453-69.	1
D 453-1a	Brake pedal,(without pedal pad). Rod for pad 9 mm. Until July 1961.	1
DS 453-1a	Brake pedal (without pedal pad). Rod for pad 36 mm long. July 1961 - September 1962.	1
DS 453-1b	Brake pedal, rod for pad 32 mm long. Since September 1962.	1
D 453-9	*Pipe assembly for brake operation, 8 pipes 6·35 mm. diameter, 2 flanges. Until February 1956. No longer supplied.*	1
D 453-9a	Pipe assembly for brake operation, 8 pipes, 6.35 mm diameter, 2 flanges. February 1956 - April 1957.	1
DF 453-9	Pipe assembly for brake operation, 2 flanges, 2 screwed unions. July 1960 - September 1962.	1
DS 453-9a	Pipe assembly for brake operation, 8 pipes 6.35 mm diameter, 1 flange, 3 point fixing 6 mm diameter, 1 flange, 2 point fixing 6 mm diameter. April 1957 - July 1960.	1
DS 453-9d	Pipe assembly controlling brakes, 2 flanges, 2 screwed unions. Since September 1962.	1
D 453-15	Circlip for valve controlling hydraulic brake.	2
D 453-36a	Bush, rubber, protecting brake pedal pad rod, internal diameter 14 x 20, external diameter 36 mm. Until July 1961.	1

NUMBER	DESCRIPTION	No. OFF
DS 453-36	Bush, rubber, protecting brake pedal pad rod, 5.5 mm thick. Since July 1961.	1
D 453-51	Return spring for brake control valve, internal diameter 8.5 mm.	2
D 453-52	Joint, rubber, 20 x 24 x 3.5, for hydraulic brake control.	2
D 453-53	Thrust washer, 6.4 x 8.4 x 14.65 x 7, for brake control valve return spring. Until July 1961.	2
DS 453-54	Seal plate for flange on brake control piping, 6 holes, 8.3 mm diameter, 3 fixing holes 28 and 53 between centres (R. VI). Until April 1957.	1
DS 453-54a	Seal plate for flange on brake control piping, 6 holes 7.6 mm diameter, 3 fixing holes 6 mm diameter (R. VI). Since April 1957.	1
D 453-63	Thrust cup for brake control valve, 6.45 x 20 x 4. Until July 1961.	2
D 453-69	Sealing ring, rubber, for brake control slide valve, 6 x 17.5 x 3.5 (R. VI). Until July 1961.	2
DS 453-69	Joint, felt, for brake control slide valve, 6.35 x 13.2 x 1. Since July 1961.	2
D 453-70	Cap for brake control, threaded 24 diameter x 150 pitch.	2

NUMBER	DESCRIPTION	No. OFF
	Washer, rubber, for taking up clearance on pedal pad rod, 10 x 36.	As nec.
D 453-91c	Thickness: 1 mm	
D 453-91d	" 3 mm	
D 453-97	Pad for brake pedal, internal diameter 27 mm. Until July 1961.	1
DS 453-97	Pad for brake pedal, internal diameter 42 mm. Since July 1961.	1
D 453-98	Thrust ring for brake pedal, threaded 9 diameter x 125 pitch. Until July 1961.	1
DS 453-98	Thrust ring for brake pedal, threaded 9 diameter x 125 pitch. Since July 1961.	1
D 453-115	Articulating spindle for brake pedal, 7 x 16.	2
D 453-158	Screw, countersunk head, 4 diameter x 11 long, retaining pedal pad.	1
DS 453-211	Ring, rubber, split, between cylinder and brake control slide valve sealing joint, 6.9 x 9.5 x 2.4. Until July 1961.	2
D 456-0	Braking distributor. Until July 1960.	1
DF 456-0	Braking distributor. Since July 1960.	1
D 456-1	Body for braking distributor.	1
D 456-2	Guide cap for braking distributor, threaded 16 diameter x 150 pitch.	1

The numbers underlined indicate new parts and do not appear on the illustrations.

NUMBER	DESCRIPTION	No. OFF
D 456-3	*Slide valve for braking distributor 74·5 mm. long 6·35 mm. diameter. Until November 1959. Replaced by DS 456-3, order in addition 1-DS 456-98, 1-DS 456-50.*	1
DF 456-3	Slide valve for braking distributor, 78 mm long, 6.35 mm diameter. Since July 1960.	1
DS 456-3	Slide valve for braking distributor, 78 mm long, 6.35 mm diameter. November 1959 - July 1960.	1
D 456-4	Trolley for braking distributor.	1
DS 456-50	Thrust washer, 7 x 11.25 x 1, for brake distributor spring. Since November 1959.	1
D 456-92	Retaining plate for distributor.	1
D 456-93	Compensator plate for distributor trolley, 25 x 34.	1

NUMBER	DESCRIPTION	No. OFF
D 456-96	Spindle, 9 diameter x 32 long, for distributor slide valve.	1
D 456-98	*Spring, internal diameter 8 mm. 12 coils for distributor slide valve. Until November 1959. Replaced by DS 456-98; order in addition: 1-DS 446-3, 1-DS 456-50.*	1
DF 456-98	Spring for distributor slide valve, threaded 2.4 mm. Since July 1960.	1
DS 456-98	Spring for distributor slide valve, internal diameter 8 mm, 9 coils. November 1959 - July 1960.	1
D 456-99	Joint, rubber, for braking distributor 16 x 20.4 x 4.	1
D 831-01a	Floor for pedal with brake control. Until April 1957.	1
DF 831-01	*Floor for pedal with brake control. July 1960 - July 1961. Replaced by DF 831-01b.*	1

NUMBER	DESCRIPTION	No. OFF
DF 831-01b	Floor for pedal with brake control, (1 drain tube). July 1961 - September 1962.	1
DS 831-01b	Floor for pedal with brake control, flange for outlet fixed at 3 points, 6 mm diameter. April 1957 - July 1960.	1
DS 831-01e	Pedal panel with brake control. Since September 1962.	1
155-S 30	Screw, pointed, 5 diameter x 15 long, securing brake control (R. III).	2
321-S	Screw, hex. head, 6 diameter x 30 long, securing brake control flange (R. III). Since April 1957.	1
480-S	Screw, hex. head, 7 diameter x 14 long, securing brake control (R. III).	2
4.912-S	Ring seal, 4.9 x 8.7 x 1.9, for seal plates (R. VI). Until April 1957.	6
4.922-S	Ring seal, 4.2 x 8 x 1.9, for seal plates (R. VI). Since April 1957.	6
621.055	Screw, hex. head, 5 diameter x 11 long, securing braking distributor (R. I).	1

The numbers underlined indicate new parts and do not appear on the illustrations.

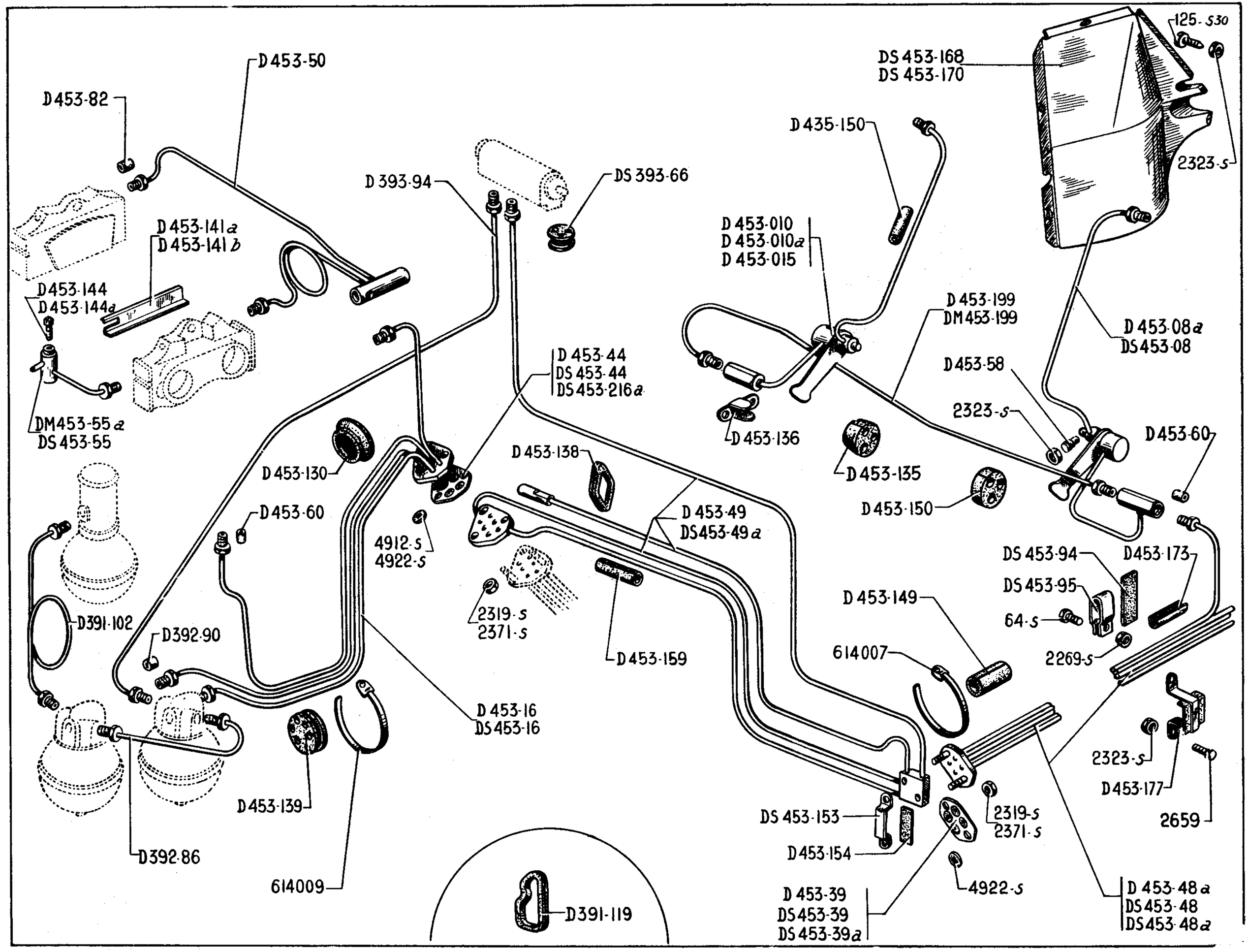
D453-50
D453-82
D453-141a
D453-141b
D453-144
D453-144a
DM453-55a
DS453-55
D393-94
DS393-66
D453-44
DS453-44
DS453-216a
D453-130
D453-60
4912-s
4922-s
D453-138
D453-49
DS453-49a
2319-s
2371-s
D453-159
D391-102
D392-90
D392-86
D453-16
DS453-16
D453-139
614009
D391-119
DS453-168
DS453-170
125-s30
2323-s
D435-150
D453-010
D453-010a
D453-015
D453-199
DM453-199
D453-08a
DS453-08
D453-58
2323-s
D453-136
D453-135
D453-60
D453-150
DS453-94
D453-173
DS453-95
64-s
2269-s
D453-149
614007
2323-s
D453-177
2659
2319-s
2371-s
DS453-153
D453-154
4922-s
D453-39
DS453-39
DS453-39a
D453-48a
DS453-48
DS453-48a

NUMBER	DESCRIPTION	No. OFF
	Until July 1960	
D 391-102	Pipe, between pressure control valve and brake accumulators, pipe 4.5 mm diameter.	1
D 391-119	Carrier, rubber, for general rear piping, 42 x 67.5. Until March 1956.	1
D 392-86	Pipe connecting brake accumulators, pipe 4.5 mm diameter.	1
D 392-90	Rubber sleeve, 6 x 11 x 11, for pipe union.	2
DS 393-66	Spacer, rubber, for piping protection, 24 mm diameter, 3 holes 4.7 mm diameter. Since May 1957.	1
D 393-94	Connecting pipe between brake accumulators and distribution unit.	1
D 435-150	Rubber sleeve protecting rear brake pipe, 4 x 9 x 15.	3
D 453-08a	Swivelling pipe complete for left-hand rear brake (with 3-way union). (Arrangement with manual height variation control). Until November 1957.	1
DS 453-08	Swivelling pipe complete for left-hand rear brake.(Arrangement with ID 19 manual height variation control). Since November 1957.	1
D 453-010	*Swivelling pipe complete for right-hand rear brake. Until February 1956. Replaced by D 453-015; order in addition: 1-D 453-199, 1-D 453-82.*	1
D 453-010a	*Swivelling pipe complete for right-hand rear brake (arrangement with manual height variation control). February 1956 - May 1956. Replaced by D 453-015; order in addition: 1-D 453-199, 1-D 453-82.*	1
D 453-015	Swivelling pipe complete for right-hand rear brake (with 2-way union). Since May 1956.	1

NUMBER	DESCRIPTION	No. OFF
D 453-16	Pipe assembly between accumulator and pedal gear, 4 pipes, 6.35 diameter, 1 flange. Until April 1957.	1
DS 453-16	Pipe assembly between accumulator and pedal gear, 4 pipes 6.35 diameter, 1 flange fixed at 3 points 6 mm diameter. Since April 1957.	1
D 453-39	*Seal plate (4 pipes) for union of brake and rear suspension piping, 2 holes 26 mm. between centres (R. VI). Until October 1956. Replaced by DS 453-39; order in addition: 4-4922-S.*	1
DS 453-39	Seal plate for union of brake and suspension piping, 4 holes 7.6 mm diameter, 2 fixing holes 26 mm between centres (R. VI). October 1956 - April 1957.	1
DS 453-39a	Seal plate for union of brake and suspension piping, 4 holes 7.6 mm diameter, fixing at 2 points 6 mm diameter (R. VI). Since April 1957.	1
D 453-44	*Seal plate (6 pipes) for flange of brake operating pipe assembly, 2 fixing holes 31 mm. between centres (R. VI). Until June 1956. Replaced by DS 453-44; order in addition: 6-4912-S.*	2
DS 453-44	Seal plate for flange of brake operating pipe assembly, 6 holes 8.3 mm diameter, 2 fixing holes 31 mm between centres (R. VI). June 1956 - April 1957.	2
D 453-48a	Rear piping, general for brake and suspension systems. (Arrangement with manual height variation control) Until April 1957.	1
DS 453-48	Rear piping, general for brake and suspension systems, 1 flange with 6 mm diameter stud. April 1957 - November 1957.	1

NUMBER	DESCRIPTION	No. OFF
DS 453-48a	Rear piping, general for brake and suspension systems. (Arrangement with ID 19 manual height variation control). Since November 1957.	1
D 453-49	Piping, general (front part) for brake and suspension systems: 2 flanges. 3 pipes 4.5 mm diameter. 1 pipe 6.35 mm diameter. Until April 1957.	1
DS 453-49a	Rear piping, general (front part) for brake and suspension systems, 1 flange fixing at 2 points 6 mm diameter, 1 flange fixing at 3 points 6 mm diameter. Since April 1957.	1
D 453-50	Piping for front brakes, 2 pipes 4.5 mm diameter, 1 3-way union.	1
DM 453-55a	*Bleed pipe with union for right-hand brake unit. Replaced by DS 453-64; order in addition: 1-DS 453-52 (R. VI).*	1
DS 453-55	*Bleed pipe with union for left-hand brake unit. Until March 1956. Replaced by DS 453-64; order in addition: 1-DS 453-52 (R. VI).*	1
D 453-58	Screw, 5 diameter x 21.5 long, locking rear swivelling union.	2
D 453-60	Rubber sleeve for pipe union, 6.5 x 10 x 11: - for rear piping, general. - for pipe assembly, accumulator to pedal gear.	 1 2
D 453-82	Rubber sleeve for pipe union, 4.5 x 6.5 x 11.	As nec.
DS 453-94	Rubber pad, 20 x 50 x 2, under clip retaining rear general piping. Since July 1956.	1
DS 453-95	Clip retaining rear general piping. Since July 1956.	1

NUMBER	DESCRIPTION	No. OFF
D 453-130	Sealing sleeve for piping on scuttle panel, left side, internal diameter 40 x 47.	1
D 453-135	Sealing plug, rubber, on rear wheel arch : - 2 holes 4.5 diameter. - 1 hole 8 diameter.	2
D 453-136	Yoke retaining rear swivelling piping 29 mm between centres.	2
D 453-138	Grommet, rubber, protecting piping on rear sidemember of front unit.	1
D 453-139	Block, rubber, retaining piping, 6 holes.	1
D 453-141a	Support for bleed pipe on left-hand front brake unit. Until March 1956.	1
D 453-141b	Support for bleed pipe on right-hand front brake unit.	1
D 453-144	*Bleed screw for front brake unit, threaded 5 diameter × 75 pitch, 22 long, plain portion 3 mm. Until March 1956. Replaced by D 453-144a.*	2
D 453-144a	Bleed screw for front brake unit, right-hand, threaded 5 diameter x 75 pitch, plain portion 4 mm. Since March 1956.	1
D 453-149	Rubber sleeve protecting rear general piping under centre pillar, 15 x 20 x 80.	1
D 453-150	Block, rubber, retaining rear piping, 35 mm diameter, 20 mm thick.	1
DS 453-153	Retaining plate for rear general piping (front part) 44 mm between centres (with half clip).	1
D 453-154	Rubber pad for protecting rear general piping (front part), 15 x 48.5.	1

NUMBER	DESCRIPTION	No. OFF
D 453-159	Rubber sleeve protecting rear general piping (front part), 5 x 11 x 60.	1
DS 453-168	Shield protecting swivelling piping for rear brake, left-hand.	1
DS 453-170	Shield protecting swivelling piping for rear brake, right-hand.	1
D 453-173	Sleeve protecting rear general piping on left-hand rear gusset on jack support tube, 50 mm long. March 1956 - November 1957.	1
D 453-177	Clamp with rubber for securing rear general piping, 53 mm between centres. Since March 1956.	1
D 453-199	Connecting pipe with unions between 3-way union and 2-way union for rear swivelling piping. May 1956 - November 1957.	1
DM 453-199	Connecting pipe 4.5 mm diameter between 3-way union and 2-way union for rear brake, right-hand (arrangement with ID 19 manual height variation control). Since November 1957.	1
DS 453-216a	Seal plate for brake control pipe assembly flange, 6 holes 7.6 mm diameter, fixing at 3 points 6 mm diameter (R. VI). Since April 1957.	2
64-S	Screw, round head, 4 diameter x 12.5 long, securing clip retaining rear general piping (R. III). Since July 1956.	1
125-S 30	Screw, round head, pointed, 5 diameter x 15 long, securing shield protecting swivelling piping (R. III). Since October 1956.	6

NUMBER	DESCRIPTION	No. OFF
2.269-S	Nut, hex., 4 diameter x 75 pitch, securing clip for rear general piping (R. III). Since July 1956.	1
2.319-S	Nut, hex., 5 diameter x 75 pitch (R. III) securing flange : - for rear general piping. - for brake control pipe assembly. Until April 1957.	 2 2
2.323-S	Nut, hex., 5 diameter x 75 pitch (R. III): - for screw locking rear swivelling union. - for plate securing rear general piping. Since March 1956. - for shield protecting swivelling piping. Since October 1956.	 2 2 4
2.371-S	Nut, hex., 6 diameter x 100 pitch (R. III) securing: - brake control pipe assembly. - rear general piping. Since April 1957.	 2 2
2.659	Screw, hex. head, 5 diameter x 13 long, securing plate retaining rear general piping (R. III).	2
4.912-S	Ring seal, 4.9 x 8.7 x 1.9, for seal plate DS 453-44 (R. VI). Until April 1957.	12
4.922-S	Ring seal, 4.2 x 8 x 1.9, for seal plate DS 453-39 (R. VI). Since October 1956. For seal plate DS 453-216a. Since April 1957.	4 12
614.007	Clip tightening sleeve protecting rear general piping, 190 mm long (R. VI).	1
614.009	Clip for plate retaining piping, 395 mm long (R. VI).	1

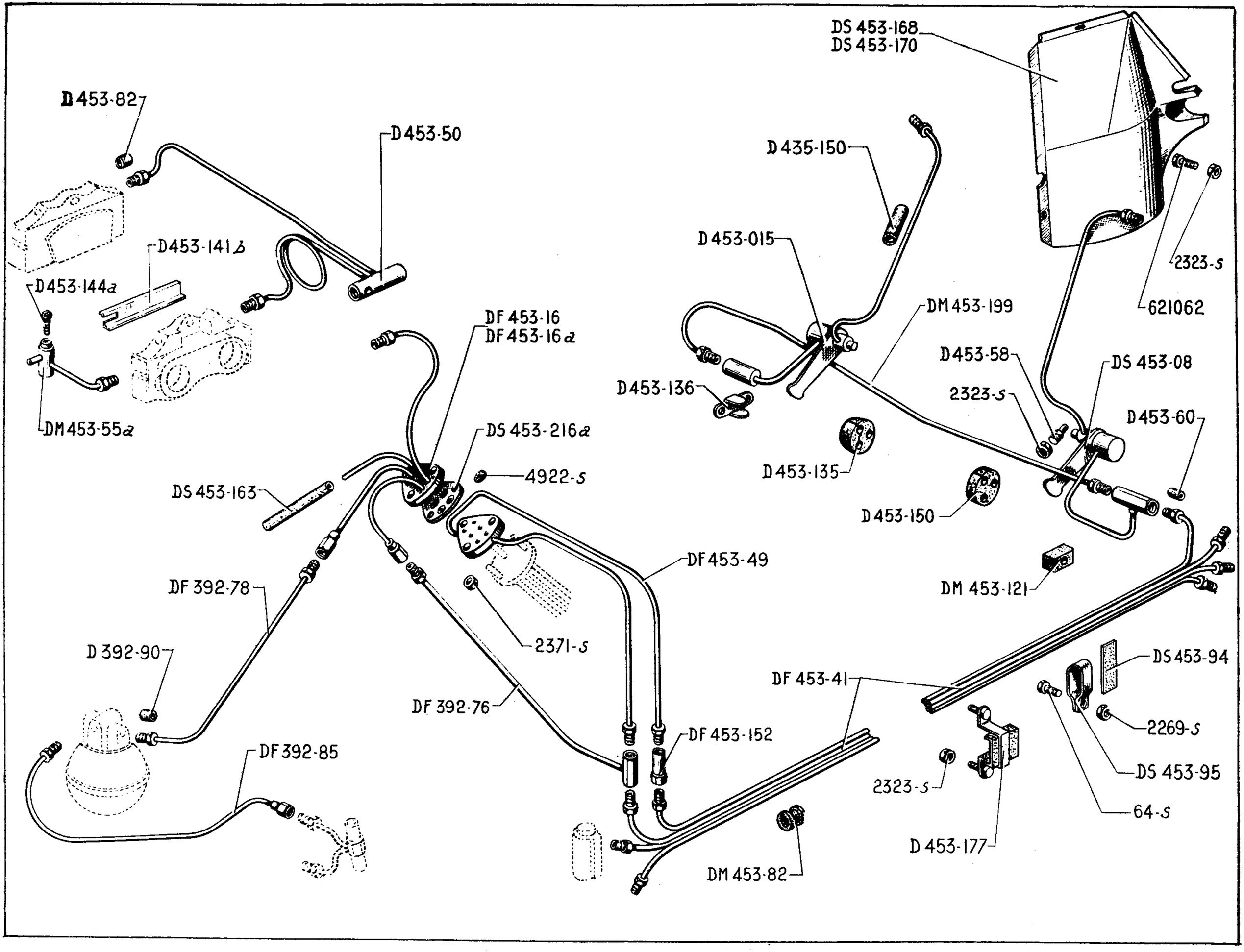
DS 453-168
DS 453-170
D 453-82
D 453-50
D 435-150
D 453-015
D 453-141 b
D 453-144 a
2323-s
621062
DM 453-199
DF 453-16
DF 453-16 a
D 453-58
DS 453-08
D 453-136
2323-s
D 453-60
DM 453-55 a
DS 453-216 a
D 453-135
4922-s
DS 453-163
D 453-150
DF 453-49
DM 453-121
DF 392-78
2371-s
D 392-90
DS 453-94
DF 453-41
DF 392-76
2269-s
DF 453-152
DF 392-85
2323-s
DS 453-95
64-s
D 453-177
DM 453-82

NUMBER	DESCRIPTION	No. OFF
	SINCE JULY 1960	
DF 392-76	Feed pipe for rear brake, one 3-way union, one screwed union.	1
DF 392-78	Connecting pipe from brake accumulator to pedal gear, (brake accumulator side), two screwed unions.	1
DF 392-85	Feed pipe for brake accumulator, one 2-way union, one screwed union.	1
D 392-90	Rubber sleeve, 6 x 11 x 11, for piping from brake accumulator to pedal gear.	1
D 435-150	Sleeve, rubber, protecting rear brake pipe, 4 x 9 x 15.	2
DS 453-08	Swivelling piping complete for rear brake, left-hand.	1
D 453-015	Swivelling piping complete for rear brake, right-hand.	1
DF 453-16	Pipe assembly between brake accumulator and pedal gear. - 1 flange. - 2 screwed unions. - 2 2-way unions. Until September 1960.	1
DF 453-16a	Pipe assembly between brake accumulator and pedal gear. - 1 flange. - 1 screwed union. - 2 2-way unions. - 1 pipe. Since September 1960.	1
DF 453-41	General piping for rear system (rear part). - 8 screwed unions.	1
DF 453-49	General piping for brake and suspension system (front part). - 1 flange. - 2 screwed unions.	1

NUMBER	DESCRIPTION	No. OFF
D 453-50	Piping for front brake. - 2 pipes. - 1 3-way union. Until September 1962.	1
DS 453-50a	Piping for front brakes, 2 pipes, 1 3-way union. Since September 1962.	1
DM 453-55a	*Bleed pipe for front brake. Until September 1960. Replaced by DS 453-64; order in addition: 1-DS 453-52 (R. VI)*	1
D 453-58	Screw, 5 diameter x 21.5 long, locking rear pivotting union.	2
D 453-60	Sleeve, rubber, for pipe union, 6.5 x 10 x 11.	As nec.
D 453-82	Sleeve, rubber, for pipe union, 4.5 x 6.5 x 11.	As nec.
DM 453-82	Sleeve, 14 x 19, protecting general piping (R. VI).	3
DS 453-94	Rubber pad, 20 x 50 x 2, under clip retaining rear general piping.	1
DS 453-95	Clip retaining rear general piping.	1
DM 453-121	Protector rubber, for rear brake swivelling piping, left-hand (R. VI).	1
D 453-135	Sealing plug, rubber, for piping on rear wheel arch (3 holes).	2
D 453-136	Yoke retaining rear swivelling piping, 29 mm between centres.	
D 453-141b	Support for bleed pipe for front right-hand brake unit. Until September 1960.	1
D 453-144a	Bleed screw for front brake unit, threaded 5 diameter x 75 pitch. Until September 1960.	1
D 453-150	Block, rubber, retaining rear piping, 35 mm diameter, 20 mm thick.	1

NUMBER	DESCRIPTION	No. OFF
DF 453-152	2-way union for brake piping, threaded 9 diameter x 125 pitch, and 12 diameter x 125 pitch.	1
DS 453-163	Rubber tube, 5 x 11 x 980 mm long, connecting pedal gear to reservoir. Since September 1960.	1
DS 453-168	Shield protecting rear brake piping, left-hand.	1
DS 453-170	Shield protecting rear brake piping, right-hand.	1
D 453-177	Clamp with rubber securing rear general piping.	1
DM 453-199	Feed pipe for rear brakes. - 2 screwed unions.	2
DS 453-216a	Seal plate for brake control pipe assembly flange, 6 holes 7.6 mm diameter (R. VI).	2
64-S	Screw, round head, 4 diameter x 12.5 long, securing clip retaining rear general piping (R. III).	1
2.269-S	Nut, hex., 4 diameter x 75 pitch, securing clip for rear general piping (R. III).	1
2.323-S	Nut, hex., 5 diameter x 75 pitch (R. III) : - for screw locking rear swivelling union. - securing screen protecting swivelling piping. - for clip securing rear general piping.	 2 5 2
2.371-S	Nut, hex., 6 diameter x 100 pitch, securing flange of brake control pipe assembly (R. III).	2
4.922-S	Ring seal, 4.2 x 8 x 1.9, for seal plate of brake control pipe assembly flange (R. VI).	6
621.062	Screw, hex. head, 5 dia. x 14 long, securing shield protecting rear swivelling piping (R. III).	6

The numbers underlined indicate new parts and do not appear on the illustrations.

158–PIPING FOR SUSPENSION AND STEERING

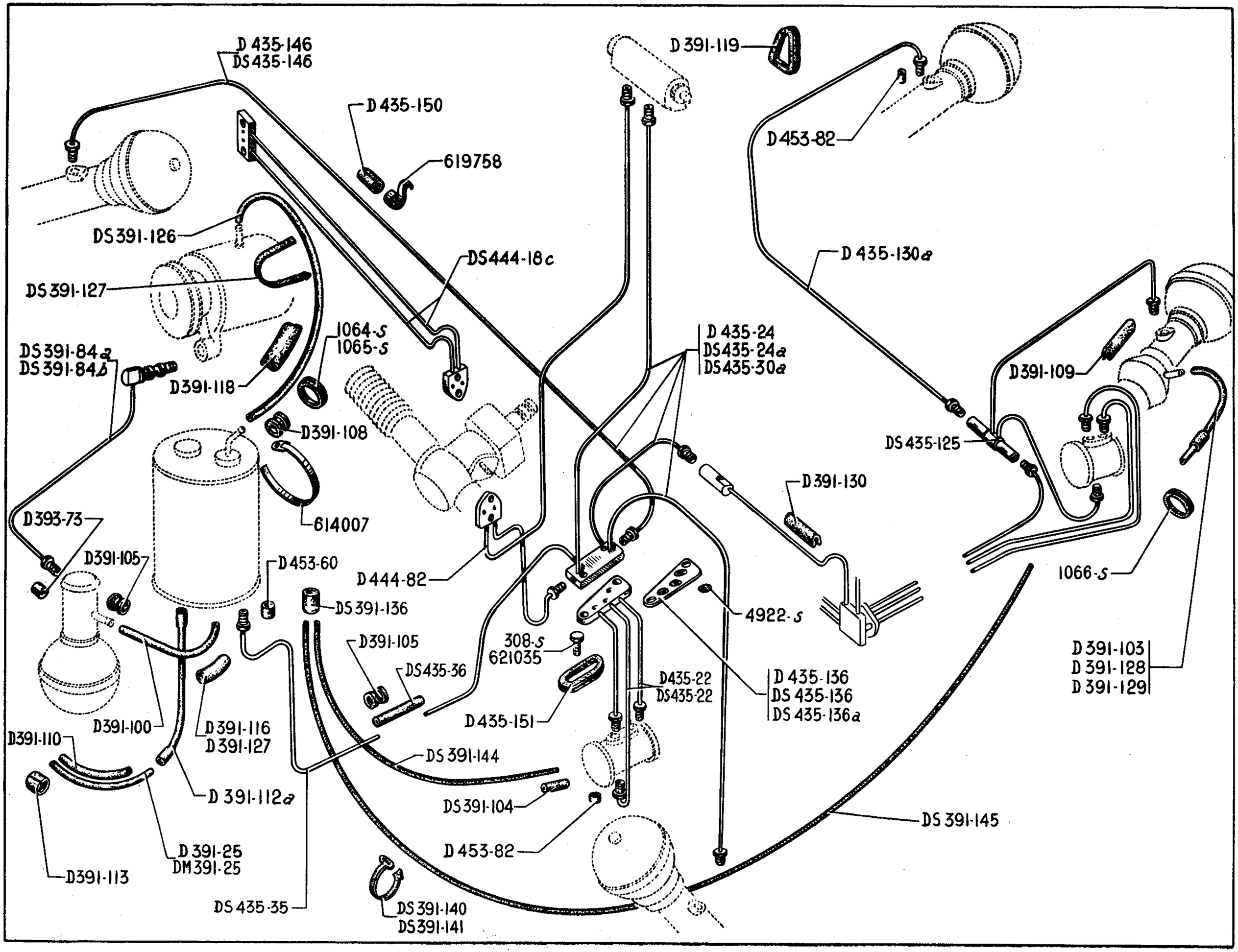

NUMBER	DESCRIPTION	No. OFF
	Until July 1960	
D 391-25	Flexible pipe for suspension overflow return. Until November 1957.	1
DM 391-25	Flexible pipe for suspension overflow return (R. VI). Since November 1957.	1
DS 391-84a	Connecting pipe complete with pivotting spindle between pump and pressure control valve, pipe 6.35 mm diameter (for replacement of 8 mm pipe); order in addition: 1-DS 391-161, 1-DS 392-90.	1
DS 391-84b	Pipe, 6.35 mm diameter between pump and pressure control valve. Since September 1958.	1
D 391-100	Connecting pipe, rubber, from control valve to reservoir, 14 mm diameter, 500 mm long.	1
D 391-103	Sleeve, rubber, protecting overflow return piping, 7 x 13 x 15.	1
DS 391-104	Sleeve, rubber, connecting overflow return on correctors, 8 x 29. Since January 1957.	2
D 391-105	Flexible sleeve under clip tightening connecting pipe between control valve and reservoir, internal diameter 15 mm.	2
	- for suspension return to reservoir. Since May 1958.	2
D 391-108	Flexible sleeve under clip tightening for connecting from reservoir to pump, internal diameter 19 mm.	2
D 391-109	Rubber sleeve protecting piping on support for rear suspension cylinder 48 mm long (R. VI).	2

NUMBER	DESCRIPTION	No. OFF
D 391-110	Protective sleeve between overflow return pipe and reservoir, on flexible union.	1
D 391-112a	Flexible union for overflow return to reservoir, 0.740 mm long.	1
D 391-113	Rubber sleeve, split, securing pipe for suspension overflow return, 8 x 12 x 15.	16
D 391-116	Sleeve, rubber, protecting connecting pipe from control valve to reservoir internal diameter 15.5 mm.	1
D 391-118	Tube, rubber, protecting piping from suspension pump to reservoir. Until July 1958.	1
D 391-119	Grommet, rubber, for overflow return pipe.	1
DS 391-126	Tube, rubber, connecting reservoir to suspension pump, 18 mm diameter, 780 mm long.	1
D 391-127	Protective sleeve on connecting pipe between control valve and reservoir.	1
DS 391-127	Sleeve, rubber, for piping from suspension pump to reservoir, 272 mm long. Since July 1958.	1
D 391-128	Protective sleeve, left side on overflow return pipe from rear suspension cylinder, 250 mm long.	1
D 391-129	Protective sleeve, right side on overflow return pipe from rear suspension cylinder, 390 mm long.	1
D 391-130	Protective sleeve for piping on support for mechanical brake control, 40 mm long (R. VI).	1

NUMBER	DESCRIPTION	No. OFF
DS 391-136	Sleeve, rubber, connecting corrector overflow to reservoir, 18 x 42. Since January 1957.	1
DS 391-140	Clip, rubber, for corrector overflow return, 46 mm long. Since January 1957.	3
DS 391-141	Clip, rubber, for corrector overflow return, 77 mm long. Since January 1957.	3
DS 391-144	Pipe, rilsan, for front corrector overflow return, 1200 mm long (R. VI). Since January 1957.	1
DS 391-145	Pipe, rilsan, for rear corrector overflow return, 4200 mm long (R. VI). Since January 1957.	1
D 393-73	Sleeve, rubber, for union, internal diameter 8.5 mm, 12.5 mm long.	As nec.
D 435-22	Pipe assembly for front corrector: - 1 flange. - 3 pipes 4.5 mm diameter. Until September 1957.	1
DS 435-22	Pipe assembly for front corrector, 1 flange, 2 point fixing, threaded 6 diameter x 100 pitch. Since September 1957.	1
D 435-24	Pipe assembly supplying front suspension: - 1 flange. - 3 pipes 4.5 mm diameter. - 1 pipe 6.35 mm diameter. Until September 1957.	1
DS 435-24a	Pipe assembly supplying front suspension, 1 flange, 2 point fixing, 6.5 diameter. September 1957 - May 1958.	1

NUMBER	DESCRIPTION	No. OFF
DS 435-30a	Pipe assembly for front suspension (return pipe in 2 parts). Since May 1958.	1
DS 435-35	Return pipe from suspension to reservoir (1 male union). Since May 1958.	1
DS 435-36	Tube, rubber, connecting suspension return to reservoir and front suspension pipe assembly, internal diameter 5 mm, 80 mm long. Since May 1958.	1
DS 435-125	Pipe assembly connecting rear suspension, left-hand (one 4-way union). Since November 1957.	1
D 435-130a	Pipe connecting general pipe assembly to rear suspension cylinder, right-hand. Pipe 4.5 mm diameter (arrangement with manual height variation control).	1
D 435-136	*Seal plate for suspension feed pipe assembly to front corrector pipe assembly (3 pipes) 2 fixing holes 38 mm. between centres. (R. VI). Until October 1956. Replaced by DS 453-136; order in addition: 3-4922-S.*	1
DS 435-136	Seal plate for suspension feed pipe assembly to front corrector, 3 holes 7.6 diameter, 2 fixing holes 36 mm between centres (R. VI). October 1956 - September 1957.	1
DS 435-136a	Seal plate for suspension feed pipe assembly to front corrector, 2 fixing points 6.5 mm diameter (R. VI). Since September 1957.	1

NUMBER	DESCRIPTION	No. OFF
D 435-146	Feed pipe for front suspension right-hand: - Pipe 4.5 mm diameter. Until May 1958.	1
DS 435-146	Feed pipe for front suspension, right-hand. Since May 1958.	1
D 435-150	Sleeve, rubber, protecting front suspension feed pipe, right-hand 4 x 9 x 15: - for corrector overflow return. Since January 1957.	2 1
D 435-151	*Grommet protecting suspension piping. Until September 1957. No longer supplied.*	1
DS 444-18c	Piping controlling rack (on rack): - 2 pipes 4.5 mm diameter. - 2 flanges.	1
D 444-82	Piping controlling rack (between distribution block and rack). - 2 pipes 4.5 mm diameter. - 1 flange.	1
D 453-60	Sleeve, rubber, for union of suspension pipe assembly to reservoir, 6.5 x 10 x 11.	1
D 453-82	Sleeve, rubber, for union 4.5 x 6.5 x 11.	As nec.
308-S	Screw, hex. head, 6 diameter x 25 long, securing seal plate of suspension pipe assembly and front corrector pipe assembly (R. III). Since September 1957.	2
1.064-S	Grommet, rubber, 16 x 32 x 7 on plate retaining piping from suspension pump to reservoir (R. III).	1

NUMBER	DESCRIPTION	No. OFF
1.065-S	Grommet, rubber, 22 x 18 x 8, for connecting pipe from reservoir to suspension pump (R. III).	1
1.066-S	Grommet, rubber, 8 x 18 x 5, for protection of overflow return in rear cylinder support (R. III).	2
4.922-S	Ring seal, 4.2 x 8 x 1.9, for seal plate DS 435-136 (R. VI). Since October 1956.	3
614.007	Clip tightening connecting pipe, 190 mm long (R. VI): - control valve to reservoir. - reservoir to suspension pump.	 2 2
619.758	Clip securing protection sleeve for front suspension feed pipe, right-hand (R. VI).	2
621.035	Screw, hex. head, 5 diameter x 25 long, securing seal plate for suspension pipe assembly and front corrector pipe assembly (R. IV).	2
	PROTECTIVE PLUGS UNIONS AND PIPE FOR REPAIR OF OVERFLOW RETURN	
D 391-57	Rubber plug for pump (outlet side), 16.5 x 22 x 13 (R. VI).	2
D 391-58	Rubber plug for pump (inlet side), 11.5 x 18 x 25 (R. VI).	1
D 391-60	Rubber plug for control valve (return side), 7.5 x 12 x 20 (R. VI).	1

NUMBER	DESCRIPTION	No. OFF
D 391-63	Plug, rubber, for pressure control valve (operating side) and corrector.	5
D 391-88	Plug, rubber, for pressure control valve (inlet side).	1
D 391-111	Plug, rubber, for pressure control valve (connection with sphere), internal diameter 53.5 mm (R. VI).	1
DS 391-146	Nylon T pipe with 15 mm diameter olive, internal diameter of junction 8 mm for repair of overflow return (R. VI).	As nec.
DS 391-148	Nylon T pipe, internal diameter 8 mm, for repair of overflow return (R. VI).	As nec.
DS 391-149	Nylon Y pipe, internal diameter 8 mm, for repair of overflow return (R. VI).	As nec.
DS 391-150	Nylon T pipe, external diameter of junction 5 mm, internal diameter 8 mm for repair of overflow return (R. VI).	As nec.
DS 391-151	Pipe, rilsan, 6 x 8, for repair of overflow return, 1 m long (R. VI).	As nec.
DS 391-152	Pipe, rilsan, 8 x 10, for repair of overflow return, 1 m long (R. VI).	As nec.
D 433-82	Cap for sphere, threaded 36 diameter x 150 pitch.	1
D 434-70	Cap for suspension cylinder (sphere side), external thread 36 diameter x 150 pitch.	1
D 434-95	*Plug for suspension cylinder (inlet side), external thread 9 diameter 125 pitch. Replaced by D 391-63.*	1
D 435-91	Plug, rubber, for corrector (overflow return) 3 x 8 x 10 (R. VI).	1
D 453-131	Protective cap for 4.5 mm diameter pipe (R. VI).	As nec.
D 453-132	Protective cap for 6.35 mm diameter pipe (R. VI).	As nec.

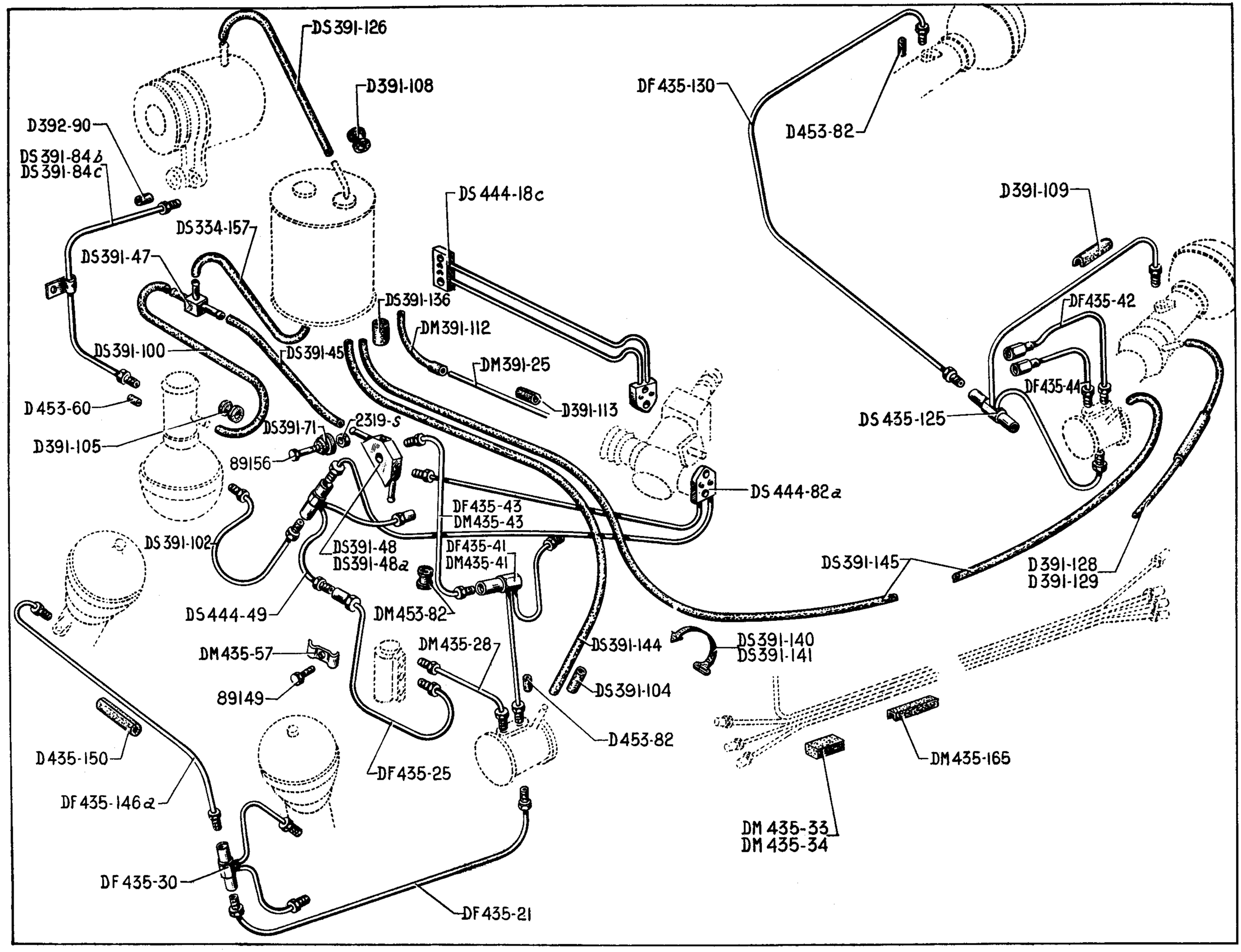
DS391-126
D391-108
DF435-130
D453-82
D392-90
DS391-84b
DS391-84c
DS444-18c
D391-109
DS334-157
DS391-47
DS391-136
DM391-112
DF435-42
DS391-100
DS391-45
DM391-25
DF435-44
D453-60
D391-113
DS435-125
D391-105
DS391-71
2319-S
89156
DS444-82a
DF435-43
DM435-43
DS391-102
DS391-48
DS391-48a
DF435-41
DM435-41
DS391-145
D391-128
D391-129
DS444-49
DM453-82
DS391-144
DS391-140
DS391-141
DM435-57
DM435-28
89149
DS391-104
D453-82
D435-150
DF435-25
DM435-165
DF435-146a
DM435-33
DM435-34
DF435-30
DF435-21

NUMBER	DESCRIPTION	No. OFF
	SINCE JULY 1960	
DS 334-157	Pipe, rubber, 7 x 14 x 460 mm long, from 3-way union to reservoir. Until September 1962.	1
DM 391-25	Flexible pipe for suspension overflow return.	1
DS 391-45	Pipe, rubber, 7 x 14 x 525 mm long, between suspension unions 5-ways and 3-ways. Until September 1962.	1
DS 391-45a	Rubber pipe between 3-way and 4-way suspension unions, internal diameter 7 mm and 10 mm, length 600 mm. Since September 1962.	1
DS 391-47	3-way union for suspension (3 pipes). Until September 1962.	1
DS 391-47a	Union, 3-way for suspension (nylon) 11 mm diameter. Since September 1962.	1
DS 391-48	5-way union for suspension (2 pipes). Until September 1960.	1
DS 391-48a	4-way union for suspension (2 pipes). Since September 1960.	1
DS 391-49	Rubber pipe for 3-way union to reservoir, internal diameter 7 mm and 10 mm, length 320 mm. Since September 1962.	1
DS 391-71	Rubber block supporting 4-way union. Since September 1960.	1
DS 391-84b	Pipe between pump and control valve. September 1960 - September 1962.	1
DS 391-84c	Pipe between high pressure pump and pressure control valve. Until September 1960.	1
DS 391-84d	Connecting pipe between pump and pressure control valve. Since September 1962.	1
DS 391-100	Pipe, rubber, 7 x 14 x 140 long, connecting control valve to 3-way union. Until September 1962.	1
DS 391-100b	Rubber pipe connecting pressure control valve to 3-way union, internal diameter 7 mm and 10 mm elbowed at 860 mm. Since September 1962.	1
DS 391-102	Connecting pipe between control valve and distribution block (control valve side).	1
DS 391-104	Sleeve, rubber, for junction on corrector for overflow return. 8 x 29.	2
D 391-105	Flexible sleeve under clip tightening connecting pipes, internal diameter 15 mm.	As nec.
D 391-108	Flexible sleeve under clip for rubber union for overflow return, internal diameter 19 mm.	1
D 391-109	Sleeve, rubber, protecting pipe on support for suspension cylinder, 48 mm long (R. VI).	2
DM 391-112	Union, rubber, for overflow return to reservoir, internal diameters 7 and 11, length 880 mm.	1
D 391-113	Bush, rubber, split, securing pipe for overflow return, 8 x 12 x 15.	12
DS 391-126	Pipe, rubber, for connecting reservoir to pump, 780 mm long (with linen sleeve).	1
D 391-128	Protecting sleeve, left-hand, on overflow return pipe from rear suspension cylinder, 250 mm long.	1
D 391-129	Protecting sleeve, right-hand, on overflow return pipe from rear suspension cylinder, 390 mm long.	1
DS 391-136	Sleeve, rubber, connecting corrector overflow return pipe on reservoir 18 x 42.	1
DS 391-140	Clip, rubber, for corrector overflow return, 46 mm long.	9
DS 391-141	Clip, rubber, for corrector overflow return, 77 mm long.	4
DS 391-144	Pipe, rilsan, for front corrector overflow return, 1200 mm long (R. VI).	1
DS 391-145	Pipe, rilsan, for rear corrector overflow return, 4200 mm long (R. VI).	1
D 392-90	Sleeve, rubber, 6 x 11 x 11, for pipe union between pump and control valve.	1
DF 435-21	Feed pipe for front suspension, right and left-hand, 2 screwed unions.	1
DF 435-25	Pipe connecting control valve to distribution block (distribution block side). - 2-way union. - 1 screwed union.	1
DM 435-28	Feed pipe for front corrector.	1
DF 435-30	Feed pipe assembly for front suspension, left-hand. - 1 4-way union. - 2 screwed unions.	1
DM 435-33	Closing plug for lateral cross-member, left-hand, 60 x 40 x 35 (R. VI).	1
DM 435-34	Closing plug for lateral cross-member, right-hand, 60 x 50 x 40 (R. VI).	1
DF 435-41	*Pipe assembly for front and rear corrector overflow return. – 1 – 3 way union; – 1 – 2 way union; – 1 screwed union. Until July 1961. Replaced by DM 435–41; order in addition: 1–DM 435–43.*	1

The numbers underlined indicate new parts and do not appear on the illustrations.

NUMBER	DESCRIPTION	No. OFF
DM 435-41	Pipe assembly for corrector overflow return. - 1 - 3 way union - 1 - 2 way union - 1 screwed union Since July 1961.	1
DF 435-42	Pipe for overflow return from rear corrector (rear part) - 1 - 2 way union - 1 screwed union	1
DF 435-43	*Pipe for overflow return from front and rear correctors; – 1 – 4 way union; – 2 screwed unions. Until July 1961. Replaced by DM 435–43; order in addition: 1 DM 435–41.*	1
DM 435-43	Pipe for overflow return from correctors with 3 way union and 2 screwed unions. Since July 1961.	1
DF 435-44	Feed pipe for rear corrector: - 1 - 2 way union - 1 - screwed union.	1
DM 435-57	Plate double, securing pipe from control valve with corrector pipe.	1

NUMBER	DESCRIPTION	No. OFF
DS 435-125	Pipe assembly connecting rear suspension, left hand. - 1 - 4 way union.	1
DF 435-130	Feed pipe for rear suspension, right hand. - 2 screwed unions.	1
DF 435-146a	Feed pipe for front suspension, right hand. - 2 screwed unions.	1
D 435-150	Sleeve, rubber, protecting feed pipe of front suspension 4 x 9 x 15.	3
DM 435-165	Sleeve rubber, protecting feed pipe of front suspension, 147 mm. long.	2
DS 444-18c	Piping controlling rack.	1
DS 444-49	Connecting pipe (feed for steering). - 1 4-way union. - 1 2-way union. - 1 screwed union.	1

NUMBER	DESCRIPTION	No. OFF
DS 444-82a	Piping controlling rack. - 2 screwed unions. - 1 flange.	1
D 453-60	Sleeve, rubber, 6.5 x 10 x 11, for union of pipe between pump and control valve.	1
D 453-82	Sleeve, rubber, for union, 4.5 x 6.5 x 11.	As nec.
DM 453-82	Ring, 14 x 19, for protecting piping for suspension (R. VI).	3
2.319-S	Nut, hex., 5 diameter x 75 pitch, securing 4-way union (R. III). Since September 1960.	1
89.149	Screw, hex. head, 5 diameter x 18 long, for double plate securing pipe for control valve (R. III).	1
89.156	Screw, hex. head, 5 diameter x 40 long, securing 4-way union (R. III). Since September 1960.	1

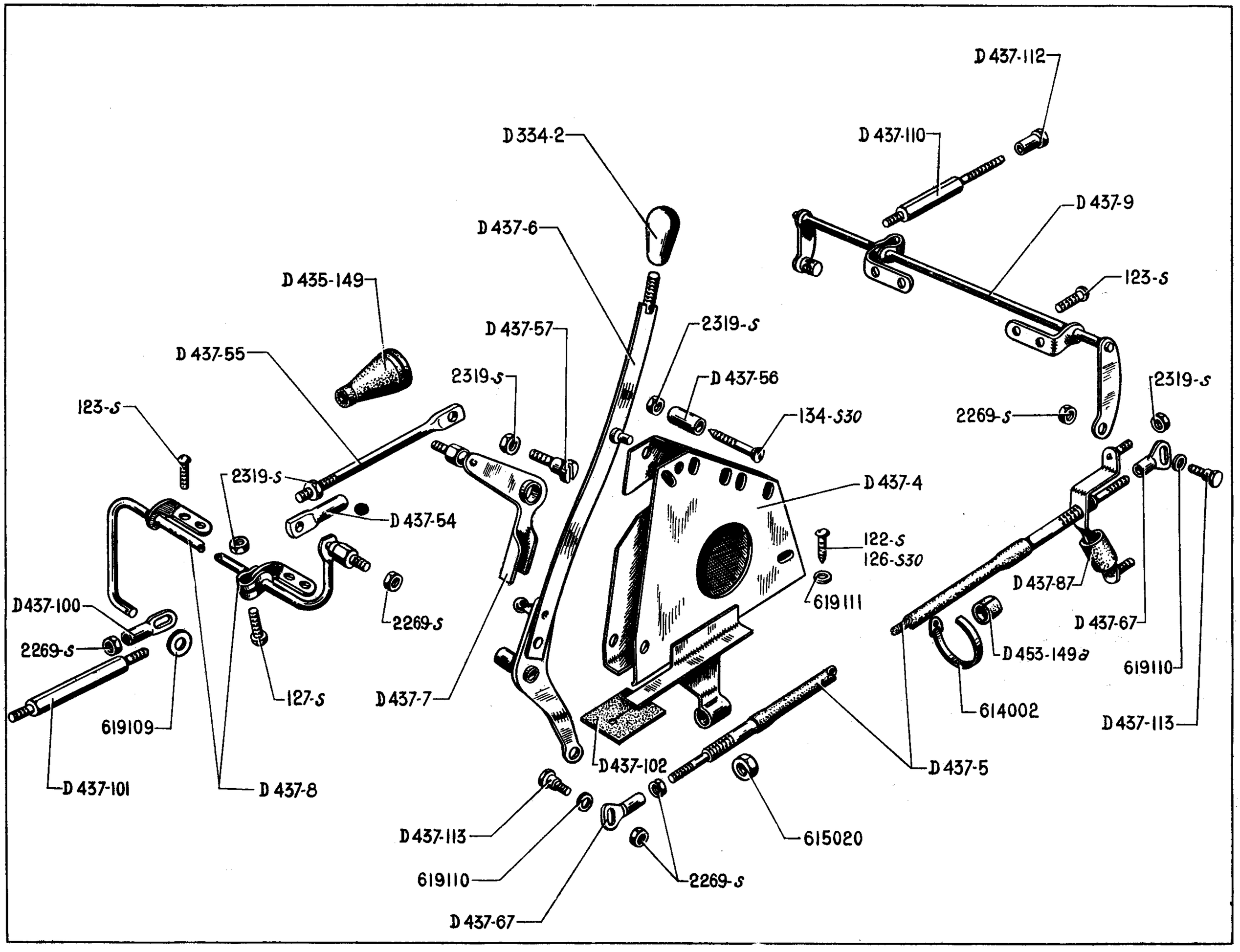
D 437-112
D 437-110
D 437-9
D 334-2
D 437-6
123-S
D 435-149
D 437-57
2319-S
D 437-55
2319-S
D 437-56
2319-S
123-S
134-S30
2269-S
2319-S
D 437-4
D 437-54
122-S
126-S30
D 437-87
619111
D 437-100
2269-S
D 437-67
D 453-149a
2269-S
619110
127-S
D 437-7
614002
D 437-113
619109
D 437-102
D 437-5
D 437-101
D 437-8
D 437-113
615020
619110
2269-S
D 437-67

NUMBER	DESCRIPTION	No. OFF
	February 1956 – November 1957	
D 334-2	Knob for hand control lever, tapped 6 diameter 100 pitch (R.VI).	1
D 435-149	Sealing sleeve on adjustable control rod 6 x 36 x 60.	1
D 437-4	Support for control lever.	1
D 437-5	Control cable, flexible, 2189 mm. long, threaded 4 diameter 75 pitch (R.VI).	1
D 437-6	Manual height control lever.	1
D 437-7	Relay lever, front, for control.	1
D 437-8	Front operating torsion rod.	1
D 437-9	Rear operating torsion rod.	1
D 437-54	End piece for adjustable control rod, threaded 5 diameter 75 pitch 44 mm. long.	1
D 437-55	Control rod, adjustable, 131 mm. long, threaded 5 diameter 75 pitch, (between front relay lever and front torsion rod).	1
D 437-56	Distance piece 5.25 x 8.1 x 22 for lever support.	2
D 437-57	Pivot pin for front relay control lever, threaded 5 diameter 75 pitch.	1
D 437-67	End piece for flexible control, threaded 4 diameter, 75 pitch.	2
D 437-87	Support, rear for flexible control.	1

NUMBER	DESCRIPTION	No. OFF
D 437-100	End piece for adjustable rod to front corrector, threaded 5 diameter 75 pitch.	1
D 437-101	Control rod adjustable for front corrector, 80 mm. long, threaded 5 diameter 75 left hand and right hand pitch.	1
D 437-102	Sealing plate, rubber for control (30 x 48 x 1).	1
D 437-110	Rod, adjustable, connecting control lever to rear corrector, threaded 4 diameter 75 pitch, 79 mm. long.	1
D 437-112	Nut, 4 diameter, 75 pitch, for locking rear corrector control lever on adjustable rod, 10 mm. long.	1
D 437-113	Pivot pin securing end of flexible cable on front and rear lever, threaded 4 diameter, 75 pitch.	2
D 453-149a	Sleeve, rubber protecting pipe assembly with flexible height variation control 15 x 20 x 15. Since August 1956.	2
122-S	Screw, round head 5 diameter 7.5 long securing support for control lever (R.III).	2
123-S	Screw, round head, 5 diameter 10 long (R.III) securing:	
	- front torsion rod on lateral crossmember.	4
	- support for rear torsion rod.	4
126-S-30	Screw, round head, 5 diameter 18 long securing support for control lever (R.III).	1
127-S	Screw, round head, 5 diameter 20 long securing tightening clip on front and rear torsion rods (R.III).	2

NUMBER	DESCRIPTION	No. OFF
134-S-30	Screw, round head, pointed 5 diameter 37.5 long securing control lever and distance piece on support (R.III).	2
2.269-S	Nut, hex. 4 diameter 75 pitch (R.III). securing:	
	- adjustable rod on front relay lever	2
	- end of adjustable rod on front torsion rod.	2
	- flexible cable.	2
	- flexible cable end piece on front and rear levers.	2
	- lever operating rear corrector on adjustable rod.	1
2.319-S	Nut, hex. 5 diameter 75 pitch (R.III) securing:	
	- lever support.	2
	- control lever.	1
	- front relay lever.	1
	- adjustable rod.	2
	- clip for front and rear torsion rods	2
614.002	Clip securing piping assembly sleeve 220 mm. long (R.VI). Since August 1956.	2
615.020	Nut, hex. 8 diameter 100 pitch, securing flexible control on supports (R.II).	4
619.109	*Washer 6·5 × 12 × 1·5 locking end piece on front torsion rod (R. II). No longer supplied.*	1
619.110	Washer, 5.25 x 12 x 0.8 for pin securing flexible cables on front and rear levers (R.II).	2
619.111	Washer, 5.5 x 16 x 5 securing support for control lever on lateral scuttle panel (R.VI).	1

170–MANUAL HEIGHT VARIATION CONTROL

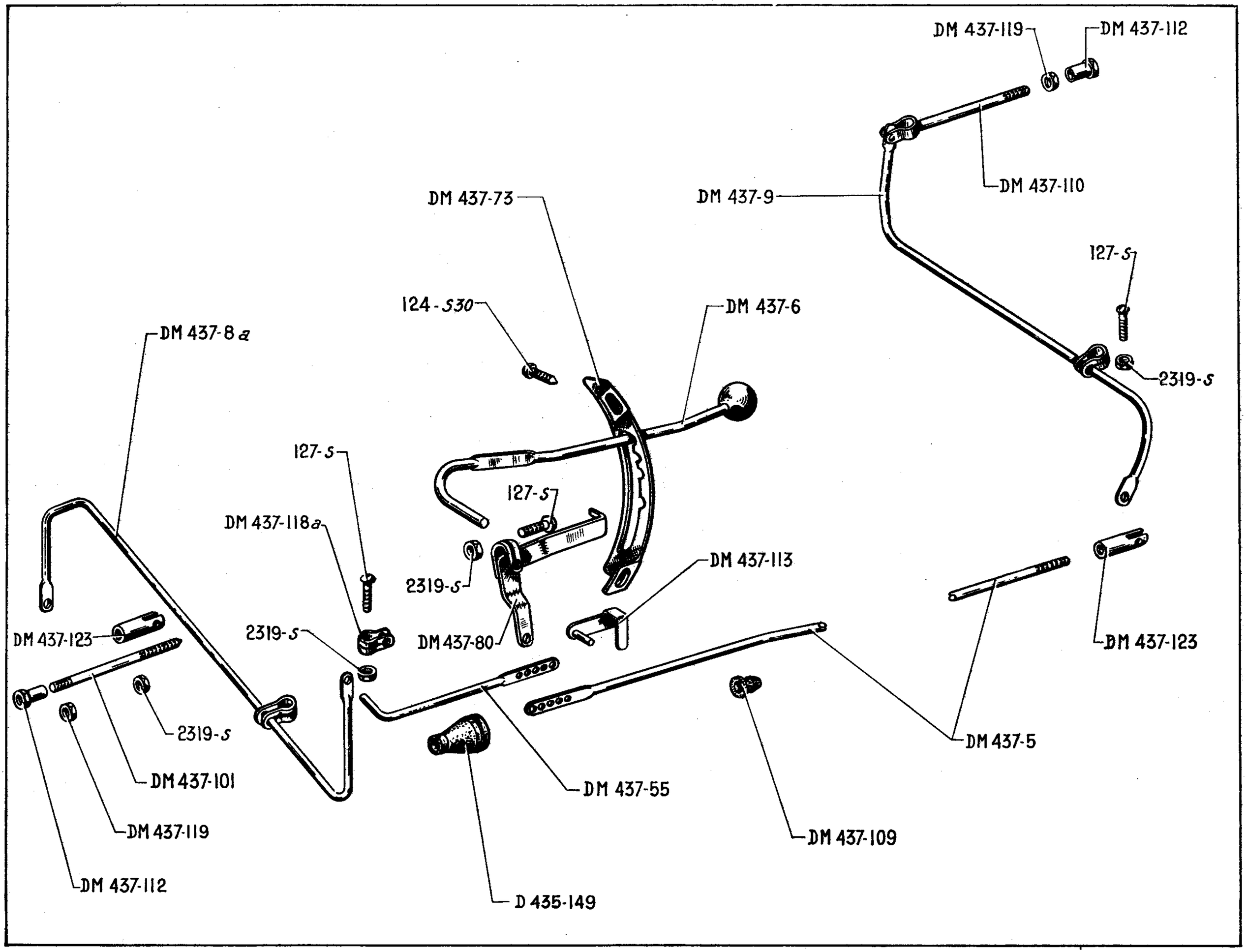

NUMBER	DESCRIPTION	No. OFF
	Since November 1957	
D 435-149	Sleeve, rubber, sealing adjustable control rod 6 x 36 x 60.	1
DM 437-5	Rod, rear, connecting manual height variation control 2170 mm. long.	1
DM 437-6	Lever with knob for manual height variation control.	1
DM 437-8a	Front torsion rod complete for manual height variation control.	1
DM 437-9	Rear torsion rod complete for manual height variation control.	1
DM 437-55	Rod, adjustable between front torsion rod and manual height variation control.	1
DM 437-73	Quadrant for manual height variation control.	1
DM 437-80	Relay lever for manual height variation control.	1
DM 437-101	Front connecting rod for manual height variation control, threaded 5 diameter 75 pitch, length 81 mm.	1
DM 437-109	Bearing, nylon for rear connecting rod for manual height variation control (for 8 mm. diameter hole) (R.VI).	4
DM 437-110	Rod with yoke connecting rear manual height variation control, 96 mm. long.	1
DM 437-112	Nut, 5 diameter 75 pitch locking front and rear connecting rods for manual height variation control, 11.5 mm. long (R.VI).	2
DM 437-113	Connecting pin on manual height control lever.	1
DM 437-118a	Clip, lateral, for front torsion rod for manual height variation control.	1
DM 437-119	Locknut 5 diameter, 75 pitch locking front and rear connecting rods for manual height variation control (R.VI).	2
DM 437-123	Yoke for front and rear connecting rods for manual height variation control, threaded 5 diameter 75 pitch, length 35 mm.	2
124-S-30	Screw, round head, 5 diameter 10 long, securing sector on lateral scuttle panel (R.III).	2
127-S	Screw, round head 5 diameter 20 long (R.III) securing:	
	- tightening clip on lever with knob.	1
	- tightening clip on front and rear torsion rods.	2
2.319-S	Nut, hex. 5 diameter 75 pitch (R.III) securing:	
	- front connecting rod on yoke.	1
	- tightening clip on front and rear torsion rods.	2
	- tightening clip on lever with knob.	1

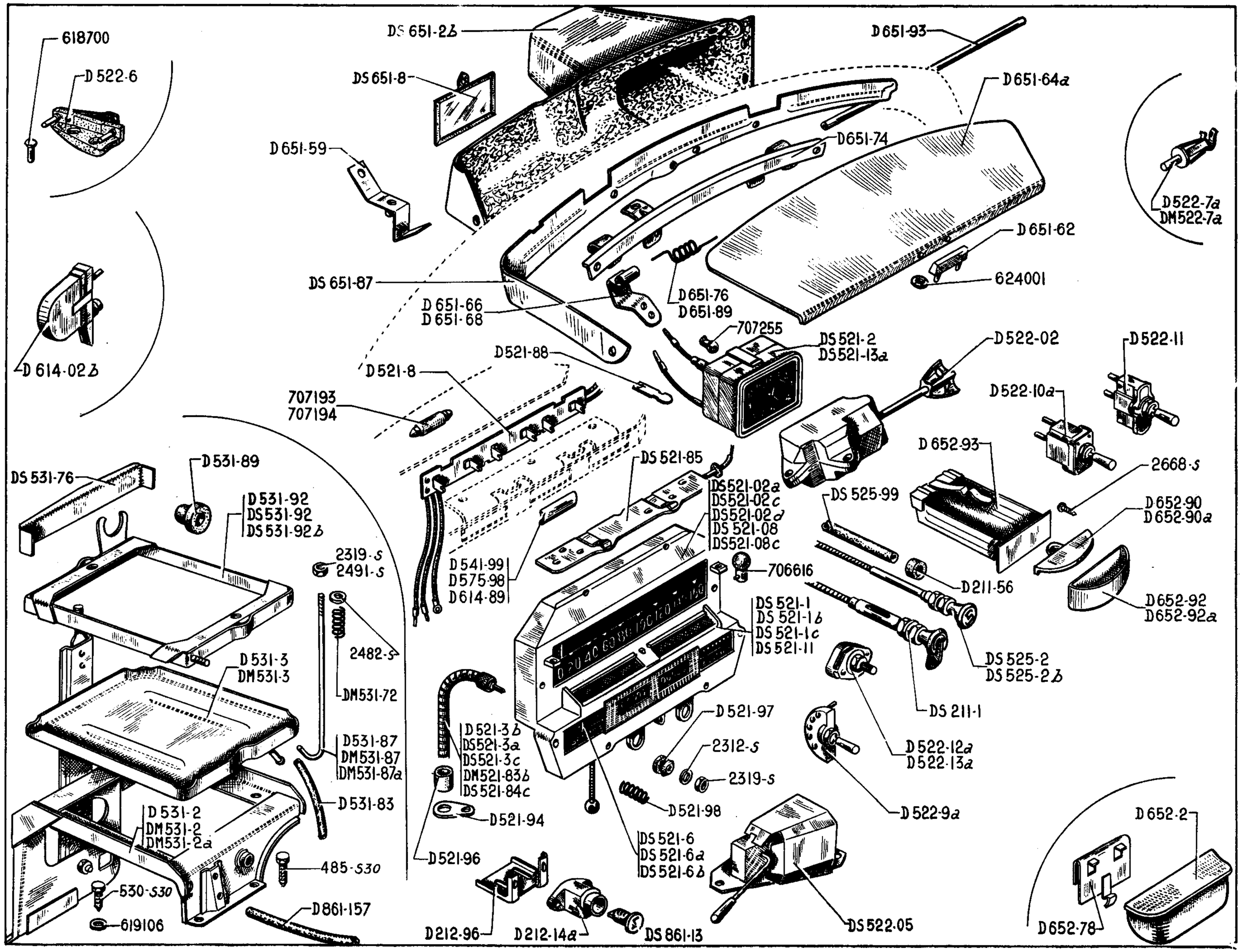
618700
D 522-6
DS 651-2b
D651-93
DS 651-8
D651-64a
D651-59
D651-74
D522-7a
DM522-7a
D 651-62
624001
DS 651-87
D 651-66
D 651-68
D651-76
D651-89
707255
DS 521-2
DS521-13a
D522-02
D522-11
D 614-02b
D521-88
D521-8
707193
707194
D522-10a
D 652-93
2668-s
DS 531-76
D 531-89
D 531-92
DS 531-92
DS 531-92b
DS 521-85
DS521-02a
DS521-02c
DS521-02d
DS 521-08
DS521-08c
DS 525-99
D 652-90
D 652-90a
2319-s
2491-s
D541-99
D575-98
D614-89
706616
D211-56
D652-92
D652-92a
DS 521-1
DS 521-1b
DS 521-1c
DS 521-11
2482-s
D 531-3
DM531-3
DS 525-2
DS 525-2b
DM531-72
DS 211-1
D521-97
D521-3b
DS521-3a
DS521-3c
DM521-83b
DS521-84c
2312-s
2319-s
D531-87
DM531-87
DM531-87a
D522-12a
D522-13a
D531-83
D521-98
D522-9a
D521-94
D 652-2
D 531-2
DM531-2
DM531-2a
DS 521-6
DS 521-6a
DS 521-6b
D521-96
485-s30
530-s30
D861-157
619106
D212-96
D212-14a
DS 861-13
DS 522-05
D652-78

NUMBER	DESCRIPTION	No. OFF
	Note - 6 volt U.S.A. ARRANGEMENT. Until December 1959. ALL TYPES. Until September 1960.	
	INSTRUMENT BOARD SWITCHES CHOKE CONTROL	
DS 211-1	Ignition control, length 495 mm (R. VI).	1
D 211-56	Bush, 4 x 16 x 20, sealing opening for choke control. Since June 1956.	1
D 212-14a	Ignition switch without lock barrel (R. VI).	1
D 212-96	Support for ignition switch.	1
DS 521-02a	*Instrument panel, 'Jaeger', ammeter to the left (R. VI). Until September 1958. Replaced by DS 521–02c.*	1
DS 521-02c	Instrument panel, "Jaeger", ammeter to the right (R. VI). Since September 1958.	1
DS 521-02d	*Instrument panel ED (Veglia) (R. VI). May 1957 – January 1958. Replaced by DS 521–02c.*	1
DS 521-08	*Instrument panel, 'Jaeger', graduated in miles, ammeter to the left (R. VI). U.S.A. Until September 1958. Replaced by DS 521–08c.*	1
DS 521-08c	Instrument panel, "Jaeger", graduated in miles, ammeter to the right (R. VI). U.S.A. Since September 1958.	1
DS 521-1	Petrol gauge, "Jaeger" (R. VI). Until September 1958.	1
DS 521-1b	Petrol gauge, "Jaeger" (R. VI). Since September 1958.	1
DS 521-1c	Petrol gauge, ED (Veglia), (R. VI). May 1957 - January 1958.	1
DS 521-2	Clock, mechanical on ashtray (R. VI). Until May 1959.	1
D 521-3b	Speedometer cable ED (Veglia), 1,450 mm long (R. VI). May 1957 - January 1958.	1

NUMBER	DESCRIPTION	No. OFF
DS 521-3a	Speedometer cable, "Jaeger", 1,430 mm long (R. VI). Until May 1958.	1
DS 521-3c	*Speedometer cable, 'Jaeger', 1,360 mm. long (R. VI). May 1958 – December 1959. Replaced by DM 521–83b; order in addition: 1–DS 521–84b.*	1
DS 521-6	Ammeter, "Jaeger" (R. VI).	1
DS 521-6a	Ammeter, "Jaeger" (R. VI). Since September 1958.	1
DS 521-6b	Ammeter, ED (Veglia) (R. VI). May 1957 - January 1958.	1
D 521-8	*Plate holding tell-tale lamp on instrument panel (without bulb). No longer supplied.*	1
DS 521-11	Petrol gauge, fitted on left side on panel (R. VI). U.S.A. Until September 1958.	1
DS 521-13a	Clock, electric, "Jaeger", 6 volts, on instrument board (R. VI). Since May 1959.	1
DM 521-83b	Speedometer cable, "Jaeger", part for gearbox end, 1030 mm long (R. VI). Since December 1959.	1
DS 521-84b	Speedometer cable "Jaeger", part for speedometer end, 320 mm long (R. VI). Since December 1959.	1
DS 521-85	Plate holding lamp lighting "Jaeger" instrument panel (without bulb) (R. VI).	1
D 521-88	Spring retaining plate holding lamp (R. VI).	2
D 521-94	Plate securing speedometer cable.	1
D 521-96	Sleeve, rubber, 8 x 22 x 20, protecting speedometer cable.	2
D 521-97	Washer, rubber, 6 x 20 x 11, for centring instrument panel.	2
D 521-98	Spring, .5.7 x 21, securing instrument panel.	2
D 522-02	Switch for lighting and horn (R. VI).	1

NUMBER	DESCRIPTION	No. OFF
DS 522-05	Switch, Axo, for direction indicator on dashboard. (R. VI). Since April 1958. Replaces switch Jaz.	1
D 522-6	Switch for starter motor on gear selector (R. VI).	1
D 522-7a	Switch on front right and left-hand door pillar with 18 mm plunger, for interior lighting and rear boot lighting (R. VI).	3
DM 522-7a	Switch on left-hand front door pillar for interior lighting, length of plunger 27 mm (R. VI). September 1958 - April 1959.	1
D 522-9a	Switch for parking lights on dashboard (R. VI).	1
D 522-10a	Switch for windscreen wiper on dashboard (R. VI).	1
D 522-11	Switch for interior lamp on dashboard (R. VI).	1
D 522-12a	Rheostat for instrument panel light (R. VI).	1
D 522-13a	Switch for demister motor on dashboard (R. VI).	1
DS 525-2	*Choke control, 500 mm. long (R. VI). Until June 1956. Replaced by DS 525–2b; order in addition: 1–DS 211–56, 1–DS 525–99.*	1
DS 525-2b	Choke control, 560 mm long (R. VI). Since June 1956.	1
DS 525-99	Rubber, anti-rattle for choke control, 200 mm long. Since June 1956.	1
D 541-99	Tell-tale light, blue, for headlamps (R. VI).	1
D 575-98	Tell-tale light, green, for direction indicator lights (R. VI).	1
D 614-02b	Pressure switch for brakes (R. VI).	2
D 614-89	Tell-tale, red, for brakes (R. VI).	1
D 652-90	Plate securing ashtray finisher, without clock. Since May 1959.	1
D 652-90a	Plate securing clock on ashtray (R. VI). Until May 1959.	1

NUMBER	DESCRIPTION	No. OFF
D 652-92	*Finisher for ashtray, arrangement without clock, width 22 mm. Since May 1959. No longer supplied.*	1
D 652-92a	Transparent finisher for clock, width 31.5 mm (R. VI). Until May 1959.	1
D 652-93	Ashtray, front, without clock, on dashboard.	1
DS 861-13	Set of 4 lock barrels for switch and doors (R. VI).	1
2.312-S	Washer, 5.5 x 9, for nuts securing instrument panel (R. III).	4
2.319-S	Nut, hex., 5 diameter x 75 pitch, for screws securing instrument panel (R. III).	2
2.668-S	Screw, PK, 3.5 x 10, securing plate on ashtray (R. VI).	2
618.700	Rivet securing starter switch contact (R. III).	2
706.616	Bulb, 6 volts, 1.5 watts, glass 11 diameter for illuminating "Jaeger" instrument panel (R. VI).	2
707.193	Bulb, 6 volts, 4 watts, 2 pole for instrument board tell-tale (R. VI).	1
707.194	Bulb, 12 volts, 4 watts, 2 pole for instrument board tell-tale (R. VI).	2
707.255	Bulb, 6 volts, 1.5 watts, for illuminating clock (R. VI). Since May 1959.	1
	BATTERY	
	For all particulars of the battery, apply direct to the makers : DININ, TUDOR, TEM, FULMEN or their official agents.	
	FIXING	
D 531-2	Support for battery. Until November 1957.	1
DM 531-2	*Support for battery without bonnet stay. November 1957 - June 1960. Replaced by DM 531-2a; order in addition: 1-DM 531-87a.*	1

NUMBER	DESCRIPTION	No. OFF
DM 531-2a	Support for battery. Since June 1960.	1
D 531-3	Tray for battery (R. VI). Until November 1957.	1
DM 531-3	Tray for battery (R. VI). Since November 1957.	1
DM 531-72	Spring on tie-rod, internal diameter 8.5 mm, length 23 mm. April 1957 - November 1957. Since November 1957.	1 2
DS 531-76	Protection plate for battery (R. VI). Until November 1957.	1
D 531-83	Water drain pipe on battery tray, 8 x 10 x 500 mm long (R. VI).	1
D 531-87	Tie-rod securing battery on support threaded 5 diameter x 75 pitch, 290 mm long. Until November 1957.	2
DM 531-87	Tie-rod, rear, securing battery frame, threaded 7 diameter x 100 pitch, 270 mm long. November 1957 - June 1960.	1
DM 531-87a	Tie-rod, rear, securing battery frame, threaded 7 diameter x 100 pitch, 270 mm long. Since June 1960.	1
D 531-89	Rubber packing piece for battery. Until November 1957.	1
D 531-92	Flange securing battery. Until July 1957.	1
DS 531-92	Frame securing battery with plate securing piping (R. VI). Since November 1957.	1
DS 531-92b	Flange securing battery with rod fixing GELBON starter solenoid. July 1957 - November 1957.	1
D 861-157	Sheath, 4.5 x 6 x 630 on battery support protecting bonnet opening cable (R. VI).	1
485-S 30	Screw, hex. head, 7 diameter x 30 long, securing battery support on sidemember (R. III).	3

NUMBER	DESCRIPTION	No. OFF
530-S 30	Screw, hex. head, 9 diameter x 22 long, securing front support for battery (R. III).	1
2.319-S	Nut, hex., 5 diameter x 75 pitch, for tie-rod securing battery (R. III). Until November 1957.	2
2.482-S	Washer, 7.5 x 14, for nuts locking spring on tie-rod (R. III).	2
2.491-S	Nut, hex., 7 diameter x 100 pitch, tightening battery tie-rod (R. III). Since November 1957.	2
619.106	Washer, 9.5 x 24 x 2, for screw securing battery support on front engine crossmember (R. III). Since November 1957.	1
	GLOVEBOX ASHTRAY	
DS 651-2b	Glovebox, without housing for hand mirror.	1
DS 651-8	Hand mirror (R. VI). Until October 1958.	1
D 651-59	Support for glovebox, lower part.	1
D 651-62	Finger plate for lifting glovebox lid (R. VI).	1
D 651-64a	*Lid for glovebox. Replaced by DS 651-3a; order in addition: 1-DS 651-87a, 2-DS 651-99.*	1
D 651-66	Hinge, right-hand for lid.	1
D 651-68	Hinge, left-hand for lid.	1
D 651-74	Bracket for hinge for glovebox lid.	1
D 651-76	Spring, right-hand for glovebox lid.	1
DS 651-87	Closing panel between glovebox and dashboard, upper part.	1
D 651-89	Spring, left-hand for glovebox lid.	1
D 651-93	Hinge pin, for glovebox lid, 402 mm long.	1
D 652-2	Ashtray, rear (R. VI).	1
D 652-78	Plate securing rear ashtray (R. VI).	1
D 652-93	Ashtray, front, without clock, on dashboard.	1
624.001	Washer, flexible, 4 mm hole for finger plate of glovebox (R. VI).	2

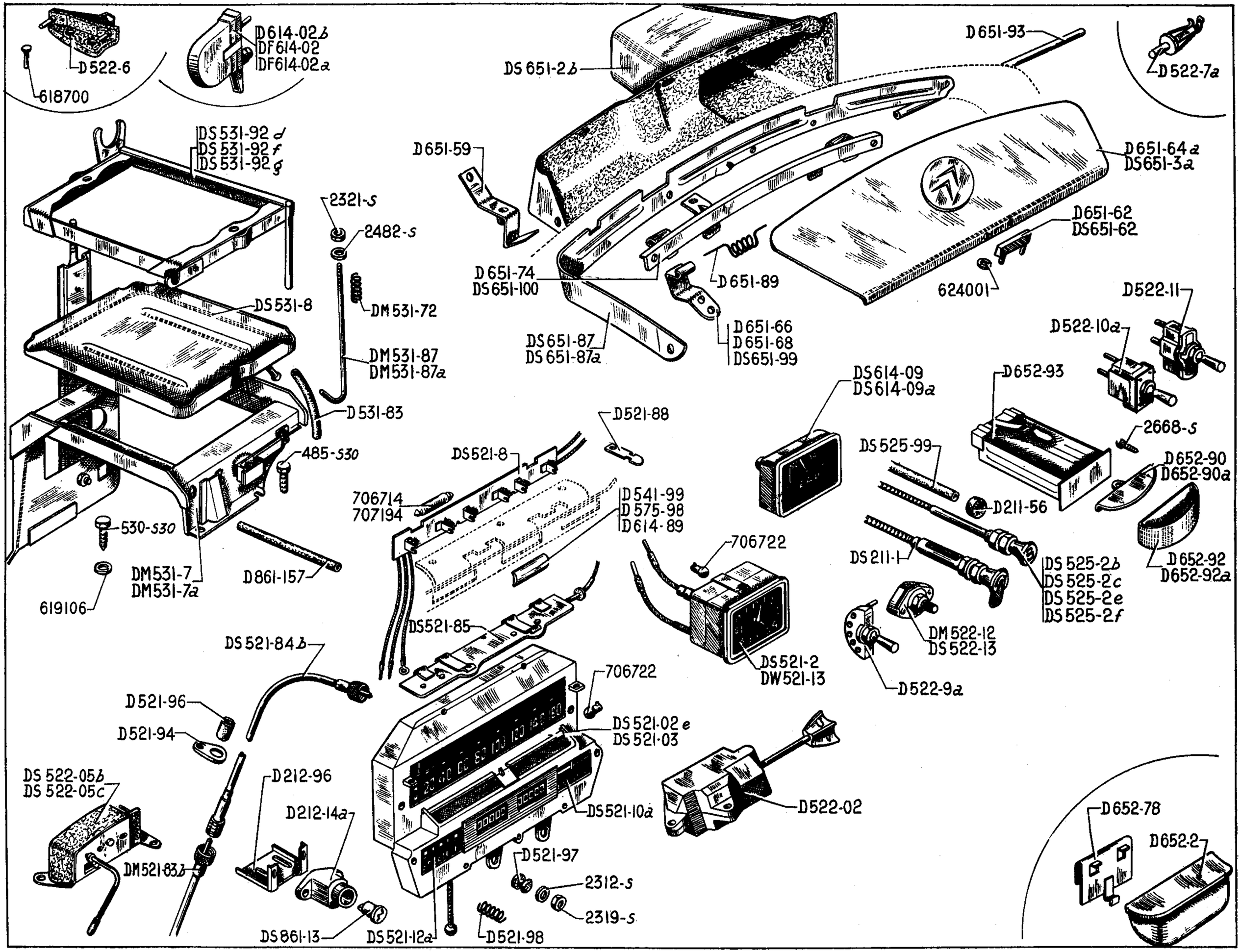
D522-6
618700
D614-02b
DF614-02
DF614-02a
DS531-92d
DS531-92f
DS531-92g
2321-s
2482-s
DS531-8
DM531-72
DM531-87
DM531-87a
D531-83
485-s30
530-s30
DM531-7
DM531-7a
D861-157
619106
DS651-2b
D651-93
D522-7a
D651-59
D651-64a
DS651-3a
D651-62
DS651-62
D651-74
DS651-100
D651-89
624001
D522-11
D522-10a
DS651-87
DS651-87a
D651-66
D651-68
DS651-99
DS614-09
DS614-09a
D652-93
D521-88
2668-s
DS525-99
D652-90
D652-90a
DS521-8
706714
707194
D541-99
D575-98
D614-89
D211-56
706722
DS211-1
DS525-2b
DS525-2c
DS525-2e
DS525-2f
D652-92
D652-92a
DS521-85
DS521-84b
DM522-12
DS522-13
DS521-2
DW521-13
D522-9a
706722
D521-96
D521-94
DS521-02e
DS521-03
DS522-05b
DS522-05c
D212-96
D212-14a
DS521-10a
D522-02
D652-78
D652-2
DM521-83b
D521-97
2312-s
2319-s
DS861-13
DS521-12a
D521-98

NUMBER	DESCRIPTION	No. OFF
	PRESTIGE **June 1959 - August 1961** **U.S.A.** **December 1959 - August 1961** **ALL TYPES** **September 1960 - August 1961** **INSTRUMENT BOARD SWITCHES CHOKE CONTROL**	
DS 211-1	Ignition control, 495 mm long (R. VI). Until March 1961.	1
D 211-56	Bush, 4 x 16 x 20, sealing hole for choke control.	1
D 212-14a	Ignition switch without lock barrel (R. VI).	1
D 212-96	Support for ignition switch.	1
DS 521-02e	Instrument panel, 12 volts, Jaeger, graduated in miles (R. VI). U.S.A.	1
DS 521-03	Instrument panel, Jaeger (R. VI).	1
DS 521-2	Clock, mechanical on ashtray (R. VI). Cold Climates, Europe and U.S.A. Since December 1960.	1
DS 521-8	Plate holding tell-tale lamp on instrument panel (without bulb).	1
DS 521-10a	Ammeter, Jaeger (R. VI).	1
DS 521-12a	Petrol gauge, Jaeger (R. VI).	1
DW 521-13	Clock, electric, Jaeger, 12 volts, on instrument board (R. VI).	1
DM 521-83b	Speedometer cable, Jaeger, part for gearbox end, 1.030 mm long (R. VI).	1
DS 521-84b	Speedometer cable, Jaeger, part for speedometer end, 320 mm long (R. VI).	1
DS 521-85	Plate for holding lamp for lighting Jaeger instrument panel (without bulb) (R. VI).	1
D 521-88	Spring retaining plate holding lamp (R. VI).	2
D 521-94	Plate securing speedometer cable.	1

NUMBER	DESCRIPTION	No. OFF
D 521-96	Bush, rubber, 8 x 22 x 20, protecting speedometer cable.	2
D 521-97	Washer, rubber, 6 x 20 x 11, for centring instrument panel.	2
D 521-98	Spring, 5.7 x 21, for securing instrument panel.	2
D 522-02	Switch for lighting and horn (R. VI).	1
DS 522-05b	Switch "Axo" for direction indicator lights (R. VI). U.S.A.	1
DS 522-05c	Switch "Axo" for direction indicator lights (R. VI).	1
D 522-6	Contact for starter motor on gear selector lever (R. VI).	1
D 522-7a	Switch on front right and left-hand door pillar for interior and rear boot lighting (R. VI).	3
D 522-9a	Switch for parking light on dashboard (R. VI).	1
D 522-10a	Switch for windscreen wiper, on dashboard (R. VI).	1
D 522-11	Switch for interior light, on dashboard (R. VI).	1
DM 522-12	Rheostat for instrument panel light (R. VI).	1
DS 522-13	Rheostat for demister motor (R. VI).	1
DS 525-2b	Choke control, 560 mm long (R. VI). Until March 1961.	1
DS 525-2c	Choke control, sheath in Rilsan, 560 mm long (R. VI). Since March 1961.	1
DS 525-2e	Choke control, knob marked "CHOKE" 560 mm long (R. VI). U.S.A. Until March 1961.	1
DS 525-2f	Choke control, sheath in Rilsan, knob marked "CHOKE" 560 mm long (R. VI). U.S.A. Since March 1961.	1
DS 525-99	Rubber, anti-rattle for choke control 200 mm long.	1
D 541-99	Tell-tale, blue, for headlamps (R. VI).	1

NUMBER	DESCRIPTION	No. OFF
D 575-98	Tell-tale, green, for direction indicator lights (R. VI).	1
DF 614-02	Pressure switch for brake (R. VI). Since July 1960.	1
DF 614-02a	Pressure switch for brake (round shape) (R. VI). Since December 1960.	1
D 614-02b	Pressure switch for brake (R. VI). Until July 1960.	2
DS 614-09	Temperature gauge, Jaeger, 12 volts, on dashboard (R. VI). Cold Climates, Europe. Since December 1960.	1
DS 614-09a	Temperature gauge, Jaeger, 12 volts, on dashboard (R. VI). Cold Climates, U.S.A. Since December 1960.	1
D 614-89	Tell-tale light, red, for brake (R. VI).	1
D 652-90	Plate securing finisher on ashtray (R. VI).	1
D 652-90a	Plate securing clock on ashtray (R. VI). Cold Climates. Since December 1960.	1
D 652-92	Finisher for ashtray (R. VI).	1
D 652-92a	Finisher, transparent for clock, width 31.5 (R. VI). Cold Climates. Since December 1960.	1
D 652-93	Ashtray, front, without finisher, on dashboard.	1
DS 861-13	Set of 4 lock barrels for ignition switch and doors (R. VI).	1
2.312-S	Washer, 5.5 x 9, for nuts securing dashboard (R. III).	4
2.319-S	Nut, hex., 5 diameter x 75 pitch, for screws securing instrument board (R. III).	2
2.668-S	Screw, PK, 3.5 x 10, securing plate on ashtray (R. VI).	2
618.700	Rivet securing starter switch contact (R. III).	2
706.714	Bulb, 24 volts, 5 watts, 2 pole for instrument board tell-tale (R. VI).	2
706.722	Bulb, 12 volts, 2 watts, lighting instrument panel and clock (R. VI).	3
707.194	Bulb, 12 volts, 4 watts, 2 pole for instrument board tell-tale (R. VI).	2

NUMBER	DESCRIPTION	No. OFF
	BATTERY	
	For all particulars of batteries, apply direct to the makers : DININ, TUDOR, TEM, FULMEN or their official agents.	
	FIXING	
DM 531-7	*Support for battery. Until June 1960. Replaced by DM 531-7a; order in addition: 1-DM 531-87a*	1
DM 531-7a	Support for battery. Since June 1960.	1
DS 531-8	Tray for battery with retaining plate for water return from heater (R. VI).	1
DM 531-72	Spring on battery tie-rod, internal diameter 8.5, length 23 mm.	2
D 531-83	Drain pipe for water on battery tray 8 x 10 x 500 mm long (R. VI).	1
DM 531-87	Tie-rod, rear, securing battery frame, threaded 7 diameter x 100 pitch, 270 mm long. Until June 1960.	1
DM 531-87a	Tie-rod, rear, securing battery frame, threaded 7 diameter x 100 pitch, 270 mm long. Since June 1960.	1
DS 531-92d	Frame securing battery. Until September 1960.	1
DS 531-92f	Frame securing battery with support for regulator. Except U.S.A. Since September 1960.	1
DS 531-92g	Frame securing battery with support for regulator and rod securing starter solenoid. U.S.A. Since September 1960.	1
D 861-157	Sheath, 4.5 x 6 x 630 on support for battery protecting bonnet opening cable (R. VI).	1
485-S 30	Screw, hex. head, 7 diameter x 30 long, securing battery support on sidemember (R. III).	3

NUMBER	DESCRIPTION	No. OFF
530-S 30	Screw, hex. head, 9 diameter x 22 long, securing front of battery support (R. III).	1
2.482-S	Washer, 7.5 x 14, for nuts locking spring on tie-rod (R. III).	2
2.491-S	Nut, hex., 7 diameter x 100 pitch, tightening battery tie-rod (R. III).	2
619.106	Washer, 9.5 x 24 x 2, for screw securing support for battery on front engine crossmember (R. III).	1
	GLOVEBOX ASHTRAYS	
DS 651-2b	Glovebox.	1
DS 651-3a	Lid for glovebox. Since October 1960.	1
D 651-59	Support for glovebox, lower part.	1
D 651-62	Finger plate for opening glovebox lid (R. VI). Until October 1960.	1
DS 651-62	Finger plate for opening glovebox lid (R. VI). Since October 1960.	1
D 651-64a	*Lid for glovebox. Until October 1960. Replaced by DS 651-3a; order in addition: 1-DS 651-87a, 2-DS 651-99.*	1
D 651-66	Hinge, right-hand for lid. Until October 1960.	1
D 651-68	Hinge, left-hand for lid. Until October 1960.	1
D 651-74	Bracket for hinge pin on glovebox lid.	1
D 651-76	Spring, right-hand for glovebox lid.	1
DS 651-87	Closing panel between glovebox and dashboard, upper part. Until October 1960.	1
DS 651-87a	Closing panel between glovebox and dashboard. Since October 1960.	1
D 651-89	Spring, left-hand for glovebox lid.	1
D 651-93	Hinge pin for glovebox lid, 402 mm long.	1

NUMBER	DESCRIPTION	No. OFF
DS 651-99	Hinge, right-hand and left-hand for glove box lid. Since October 1960.	2
DS 651-100	Reinforcement for hinge on lid. Since October 1960.	1
D 652-2	Ashtray, rear (R. VI).	1
D 652-78	Plate securing rear ashtray (R. VI).	1
624.001	Flexible washer, 4 mm hole for finger plate of glovebox (R. VI).	2
	SPECIAL PARTS ON PARTITION PRESTIGE	
D 652-74	Cigar lighter, 12 volts (R. VI).	1
D 651-101	Glovebox (R. VI).	1
D 522-20	Knob for interior light switch and radio telephone (R. VI).	3
D 652-75	Ashtray, rear black cover (R. VI).	1
D 652-75a	Ashtray, rear, varnished cover (R. VI).	1
D 522-13b	Switch for ventilation motor (R. VI).	1
D 522-21	Plunger switch for inter-phone or radio (R. VI).	1
D 652-102	Surround for ashtray (R. VI).	1
D 653-80	Grille for microphone on rear shelf (R. VI).	1
D 653-80a	Grille for microphone on dash-board (R. VI).	1
A 522-9	Switch for interior light and radio telephone (R. VI).	3
D 653-49	Microphone for inter-phone (R. VI).	1
D 521-16	Clock, "Jaeger" (R. VI).	1
D 522-18	Potentiometer for radio (R. VI).	1

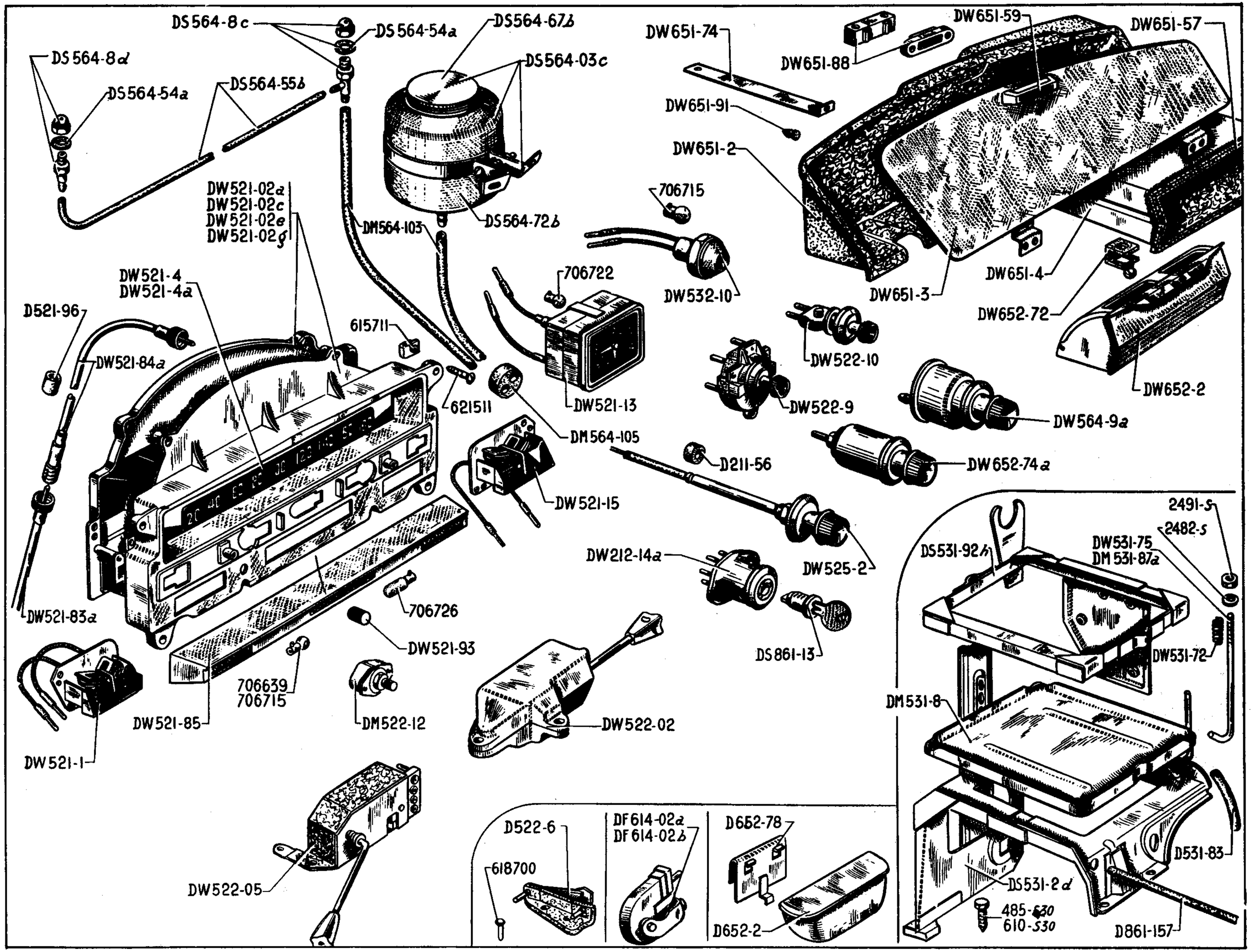
DS564-8c
DS564-54a
DS564-67b
DS564-8d
DS564-54a
DS564-55b
DS564-03c
DS564-72b
DW651-74
DW651-59
DW651-57
DW651-88
DW651-91
DW651-2
706715
DW521-02a
DW521-02c
DW521-02e
DW521-02g
DM564-103
706722
DW532-10
DW651-4
DW651-3
DW652-72
DW521-4
DW521-4a
D521-96
615711
DW521-84a
DW522-10
DW652-2
621511
DW521-13
DW522-9
DW564-9a
DM564-105
D211-56
DW652-74a
DW521-15
2491-S
2482-S
DS531-92h
DW531-75
DM531-87a
DW212-14a
DW525-2
DW521-83a
706726
DW521-93
DS861-13
DW531-72
706639
706715
DM531-8
DW521-85
DM522-12
DW522-02
DW521-1
DW522-05
D522-6
618700
DF614-02a
DF614-02b
D652-78
D652-2
D531-83
DS531-2d
485-S30
610-S30
D861-157

180–INSTRUMENT BOARD 12 VOLTS–BATTERY–GLOVEBOX–WINDSCREEN WASHER (Since August 1961)

Make of Panel	Number of Panel	Speedometer	Petrol Gauge	Temperature Gauge	Tell-tale Lamps	Graduation	Types	Remarks
JAEGER	DW 521-02a	DW 521-4	DW 521-1	Without	DW 521-85	180 Kms		
JAEGER	DW 521-02c Replaced by DW 521-02i	DW 521-4a	DW 521-1	Without	DW 521-85	110 Miles	U.S.A.	Until May 1962.
JAEGER	DW 521-02e	DW 521-4	DW 521-1	DW 521-15	DW 521-85	180 Kms	Cold Climates	
JAEGER	DW 521-02g Replaced by DW 521-02k	DW 521-4a	DW 521-1	DW 521-15	DW 521-85	110 Miles	U.S.A.-Cold Climates	Until May 1962.
JAEGER	DW 521-02i	DW 521-4a	DW 521-1	Without	DW 521-85	120 Miles	U.S.A.	Since May 1962.
JAEGER	DW 521-02k	DW 521-4a	DW 521-1	DW 521-15	DW 521-85	120 Miles	U.S.A.-Cold Climates	Since May 1962.

NUMBER	DESCRIPTION	No. OFF
D 211-56	Bush, 4 x 16 x 20, sealing opening for choke control.	1
DW 212-14a	Ignition switch without lock barrel.	1
DW 521-13	Clock, electric, "Jaeger", 12 volts on dashboard (R. VI).	1
DW 521-83a	Speedometer cable "Jaeger", part for gearbox end, 945 mm long (R. VI).	1
DW 521-84a	Speedometer cable, "Jaeger", part for speedometer end (R. VI).	1
DW 521-93	Knob for setting speedometer trip to zero (R. VI).	1
D 521-96	Bush, rubber, 8 x 22 x 20, for protection of speedometer cable.	2
DW 522-02	Switch for lighting and horn (R. VI).	1
DW 522-05	Switch "Axo" for direction indicator lights (R. VI).	1
D 522-6	Contact for starter motor on gear selector lever (R. VI).	1
DW 522-9	Switch for parking lights (R. VI).	1
DW 522-10	Switch (R. VI):	
	- windscreen wiper.	1
	- interior light.	1
	- heater.	1

NUMBER	DESCRIPTION	No. OFF
DM 522-12	Rheostat for instrument panel light (R. VI).	1
DW 525-2	Choke control with knurled knob, 560 mm long (R. VI).	1
DW 532-10	Tell-tale, red, for battery charge, without bulb (R. VI). Until May 1962.	1
DW 532-10a	Tell-tale for battery charge, without bulb (R. VI). Since May 1962.	1
DS 861-13	Set of 4 lock barrels for ignition switch and doors (R. VI).	1
615.711	Nut clip for 5 diameter screws securing panel (R. VI).	5
618.700	Rivet securing starter switch contact (R. III).	2
621.511	Screw, raised head countersunk, 5 diameter x 30 long, securing instrument panel (R. VI).	5
706.639	Bulb, 12 volts, 1.5 watts (R. VI) lighting instrument panel.	2
	- for battery charge. Since May 1962.	1
706.715	Bulb, 24 volts, 3 watts (R. VI);	
	- for headlamp tell-tales and direction indicator light on panel.	2
	- tell-tale for battery charge on dashboard. Until May 1962.	1
706.726	Bulb, 12 volts, 4 watts, for brake tell-tale on panel (R. VI).	1

NUMBER	DESCRIPTION	No. OFF
	BATTERY	
	For all particulars of the battery, apply direct to the makers: DININ, TUDOR, TEM, FULMEN or their official agents.	
	FIXING	
DS 531-2d	Support for battery. Until September 1962.	1
DM 531-8	Tray for battery.	1
DW 531-72	Spring on battery tie-rod, internal diameter 8.5, length 20 mm.	2
DM 531-73a	Distance piece securing battery support. Since September 1962.	1
DS 531-73	Distance piece, 9.5 x 6 x 31.5, securing battery support. Until September 1962.	1
DS 531-75a	Tie-rod, front, securing battery frame, 164 mm long. Since September 1962.	1
DW 531-75	Tie-rod, front, securing battery frame, 143 mm long. Until September 1962.	1
D 531-83	Water drain pipe on battery tray, 8 x 10 x 500 mm long.	1
DM 531-87a	Tie-rod, rear, securing battery frame, threaded 7 diameter x 100 pitch, 270 mm long. Until October 1961.	1

The numbers underlined indicate new parts and do not appear on the illustration.

NUMBER	DESCRIPTION	No. OFF
DS 531-87	Tie-rod, rear, securing battery frame, threaded 7 diameter x 100 pitch, 245 mm long. Since October 1961.	1
DS 531-91d	Support for battery with plate supporting heater pipe. Since September 1962.	1
DS 531-92h	Frame retaining battery.	1
D 861-157	Sheath, 4.5 x 6 x 630 on battery support, protecting bonnet opening cable, left-hand (R. VI).	1
DS 861-157a	Sheath, 4.5 x 6 x 350, protecting bonnet opening cable, right-hand (R. VI). Since September 1962.	1
485-S 30	Screw, hex. head, 7 diameter x 30 mm long, fixing battery support on sidemember (R. III).	3
610-S 30	Screw, hex. head, 9 diameter x 55 mm long, pointed, securing front of battery support (R. III).	1
2.482-S	Washer, 7.5 x 14, for nuts locking spring on tie-rod (R. III).	2
2.491-S	Nut, hex., 7 diameter x 100 pitch, tightening battery tie-rod (R. III).	2
	GLOVEBOX ASHTRAYS MAP POCKET	
DW 651-2	Glovebox.	1
DW 651-3	Glovebox lid.	1
DW 651-4	Map pocket.	1
DW 651-20	Body and backplate assembled for magnetic closing of glovebox lid (R. VI).	1
DW 651-57	Lining for map pocket (R. VI).	1
DW 651-59	Finger plate for glovebox lid.	1
DW 651-74	Strap securing glovebox.	1
DW 651-88	*Magnetic body for closing glovebox lid with lockplate (R. VI). Replaced by DW.651-20.*	1

NUMBER	DESCRIPTION	No. OFF
DW 651-91	Stop for glovebox lid.	1
DW 651-99	Nut, 5 diameter x 75 pitch, in Rilsan securing map pocket (R. VI).	3
D 652-2	Ashtray, rear (R. VI).	1
DW 652-2	Ashtray, front (R. VI).	1
DW 652-72	Guide stop for ashtray (R. VI).	1
DW 652-74a	Cigar lighter (R. VI).	1
D 652-78	Plate securing rear ashtray (R. VI).	1
	BRAKE PRESSURE SWITCH	
DF 614-02a	Pressure switch for brake, round shape (R. VI).	1
DF 614-02b	Pressure switch for brake, rectangular stop lamp (R. VI).	1
	WINDSCREEN WASHER	
DS 564-03c	Reservoir complete (R. VI).	1
DS 564-8c	Nozzle with double union, right-hand (R. VI).	1
DS 564-8d	Nozzle with single union, left-hand (R. VI).	1
DW 564-9a	Pump for windscreen washer (R. VI).	1
DS 564-54a	Joint for nozzle (R. VI).	2
DS 564-55b	Pipe, 4 mm diameter for feed from right-hand nozzle to left-hand nozzle, 690 mm long (R. VI).	1

NUMBER	DESCRIPTION	No. OFF
DS 564-67b	Lid for reservoir (R. VI).	1
DS 564-72b	Reservoir without lid, or clip (R. VI).	1
DM 564-103	Pipe, 6 mm diameter for delivery from pump to reservoir and feed to right-hand nozzle, 1 m long (R. VI).	2
DM 564-105	Protector, rubber for pipes, 2 holes 6 mm (R. VI).	2
	SPECIAL PARTS ON PARTITION PRESTIGE	
D 652-74	Cigar lighter, 12 volts (R. VI).	1
D 651-101	Glovebox (R. VI).	1
D 522-20	Knob for interior light switch and radio telephone (R. VI).	3
D 652-75	Ashtray, rear, black lid (R. VI).	1
D 652-75a	Ashtray, rear, varnished lid (R. VI).	1
D 522-13b	Switch for ventilation motor (R. VI).	1
D 522-21	Plunger switch for inter-phone or radio (R. VI).	1
D 652-102	Surround for ashtray (R. VI).	1
D 653-80	Grille for microphone on rear shelf (R. VI).	1
D 653-80a	Grille for microphone on dash-board (R. VI).	1
A 522-9	Switch for interior light and radio telephone (R. VI).	3
D 653-49	*Microphone, for interphone (R. VI). No longer supplied.*	1
D 521-16	Clock "Jaeger" (R. VI).	1
D 522-18	Potentiometer for radio (R. VI).	1

The numbers underlined indicate new parts and do not appear on the illustrations.

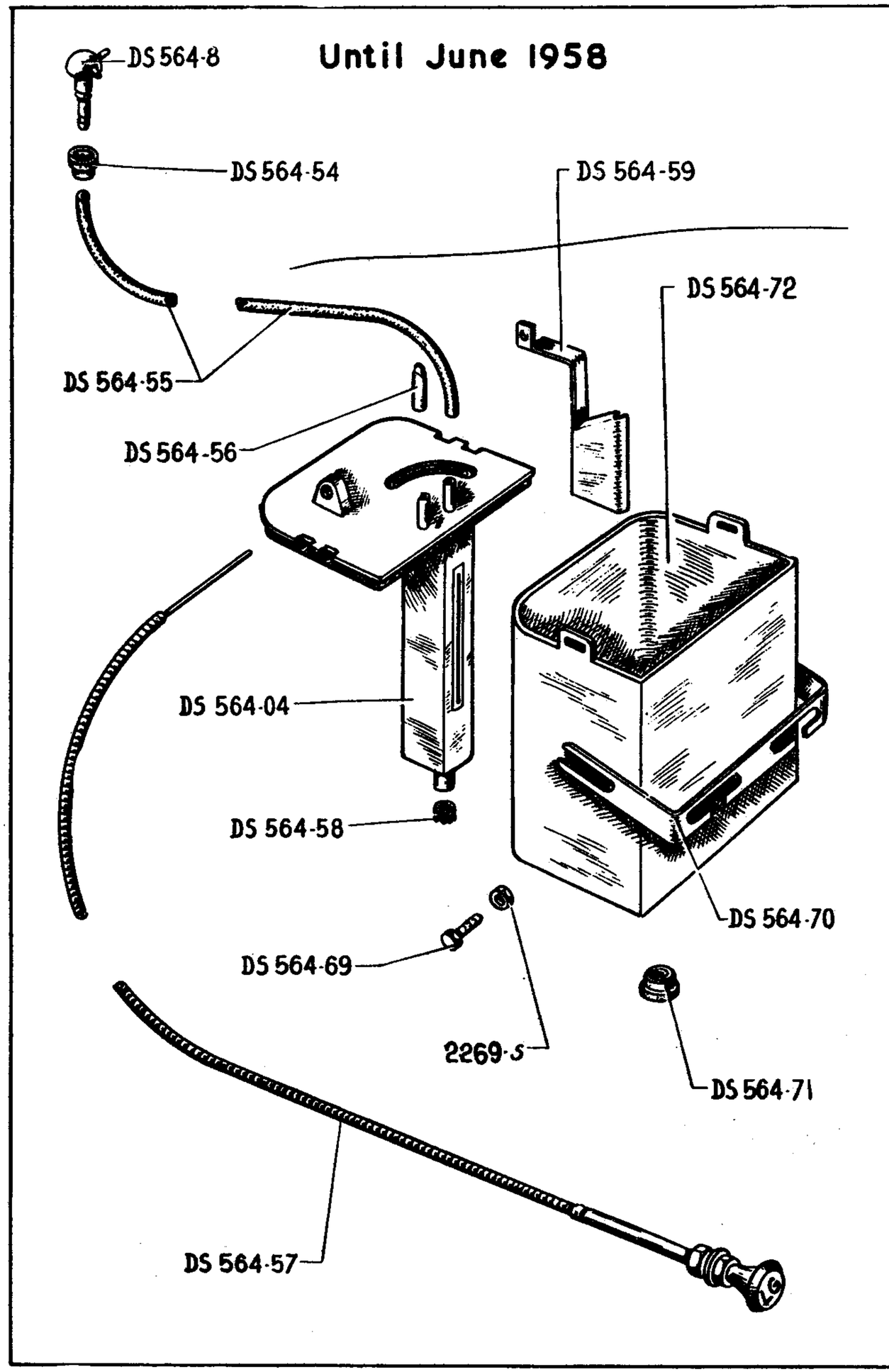
Until June 1958
DS 564-8
DS 564-54
DS 564-59
DS 564-72
DS 564-55
DS 564-56
DS 564-04
DS 564-58
DS 564-70
DS 564-69
2269-s
DS 564-71
DS 564-57

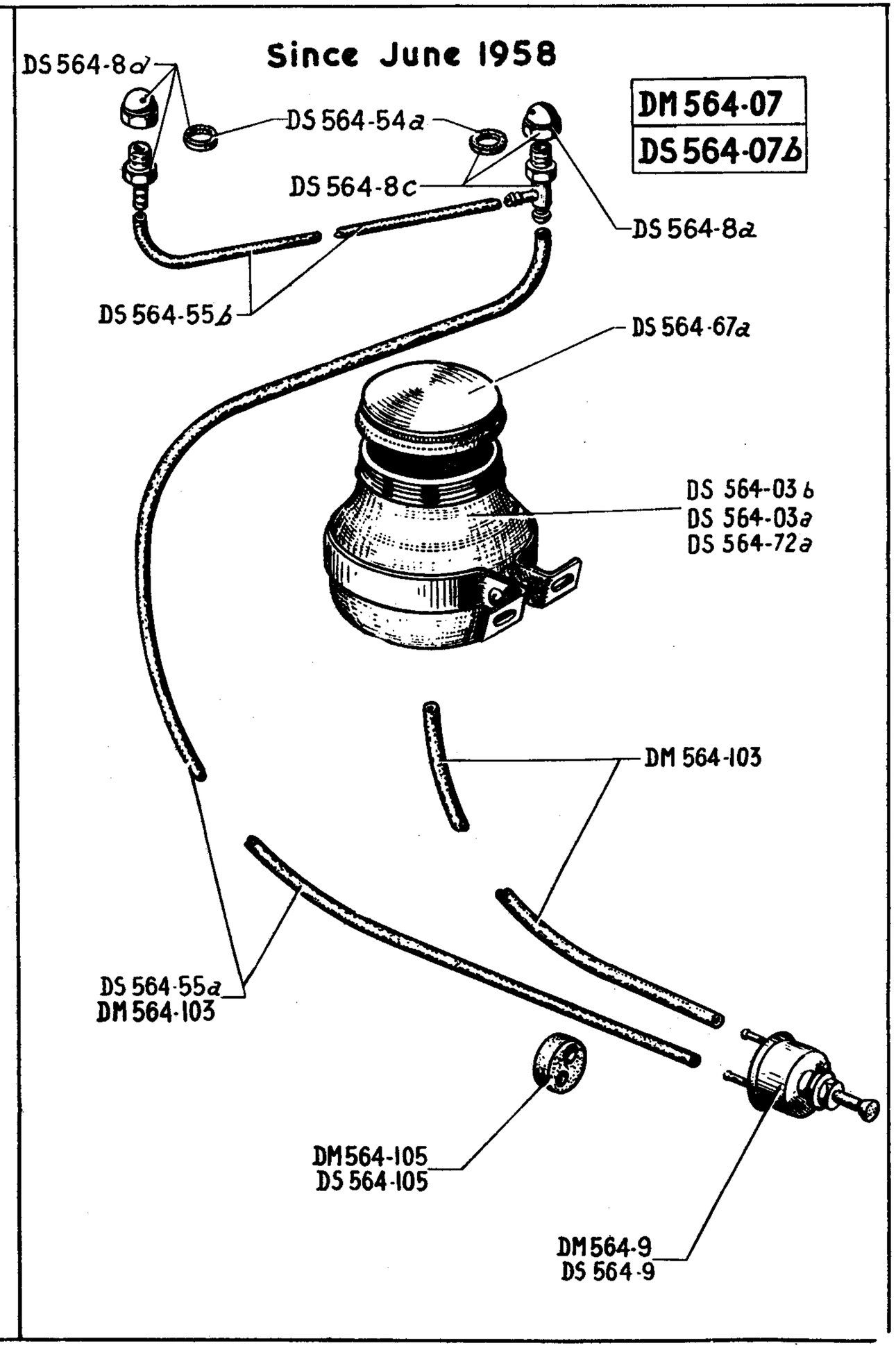
Since June 1958
DM 564-07
DS 564-07b
DS 564-8d
DS 564-54a
DS 564-8c
DS 564-8a
DS 564-55b
DS 564-67a
DS 564-03b
DS 564-03a
DS 564-72a
DM 564-103
DS 564-55a
DM 564-103
DM 564-105
DS 564-105
DM 564-9
DS 564-9

NUMBER	DESCRIPTION	No. OFF
	WINDSCREEN WASHER S.E.A.I. **Until June 1958**	
DS 564-04	*Lid complete for reservoir (R. VI). No longer supplied.*	1
DS 564-8	*Nozzle (R. VI). No longer supplied.*	1
DS 564-54	Joint, rubber, for nozzle (R. VI).	1
DS 564-55	Pipe from reservoir to nozzle (R. VI).	1
DS 564-56	Pipe cap on lid, diameter 2.8 x 4.8, length 20 mm (R. VI).	1
DS 564-57	Control, 685 mm long (R. VI).	1
DS 564-58	Filter (R. VI).	1
DS 564-59	Attachment plate for control (R. VI).	1
DS 564-69	Screw, hex. head, 4 x 10, (7 mm across flats) securing reservoir bracket (R. VI).	1
DS 564-70	Bracket for reservoir (R. VI).	1
DS 564-71	Rubber drain plug for reservoir (R. VI).	1
DS 564-72	*Reservoir (R. VI). No longer supplied.*	1
2.269-S	Nut, hex., 4 diameter x 75 pitch, for screw securing reservoir bracket (R. III).	2

NUMBER	DESCRIPTION	No. OFF
	WINDSCREEN WASHER TRANSPAR WITH ONE NOZZLE **June 1958 - September 1958**	
DS 564-03a	*Reservoir complete (R. VI). Replaced by DS 564-03c.*	1
DM 564-07	*Windscreen washer complete (R. VI). Replaced by DS 564-07b.*	1
DS 564-8a	Nozzle (R. VI).	1
DS 564-9	Pump (R. VI).	1
DS 564-54a	Joint for nozzle (R. VI).	1
DS 564-55a	Pipe, delivery, 4 diameter x 1300 mm long (R. VI).	1
DS 564-67a	Lid with joint (R. VI).	1
DS 564-72a	*Reservoir without lid or clip (R. VI). Replaced by DS 564-03c.*	1
DM 564-103	Feed pipe, 6 mm diameter x 1 m long (R. VI).	1
DS 564-105	Rubber protector for pipes (R. VI).	1

NUMBER	DESCRIPTION	No. OFF
	WITH TWO NOZZLES **September 1958 - August 1961**	
DS 564-03a	*Reservoir complete (R. VI). Until September 1960. Replaced by DS 564-03c.*	1
DS 564-03b	*Reservoir complete (R. VI). Since September 1960. Replaced by DS 564-03c.*	1
DS 564-07b	Windscreen washer complete (R. VI).	1
DS 564-8c	Nozzle with double union, right side (R. VI).	1
DS 564-8d	Nozzle with single union, left side (R. VI).	1
DM 564-9	Pump with two unions, for 6 mm pipe (R. VI).	1
DS 564-54a	Joint for nozzle (R. VI).	2
DS 564-55b	Pipe, 4 mm diameter for delivery from right-hand nozzle to left-hand nozzle, length 690 mm (R. VI).	1
DS 564-67a	Lid with joint (R. VI).	1
DS 564-72a	*Reservoir without lid or clip (R. VI). Replaced by DS 564-03c.*	1
DM 564-103	Pipe, 6 mm diameter to the pump from the reservoir and supplying the right-hand nozzle, 1 m long (R. VI).	2
DM 564-105	Protector, rubber, for pipes, 2 holes 6 mm diameter (R. VI).	2

Dynamo

D 532-0 b	DS 532-0 k
DS 532-0 b	DS 532-0 p
DS 532-0 f	DF 532-0

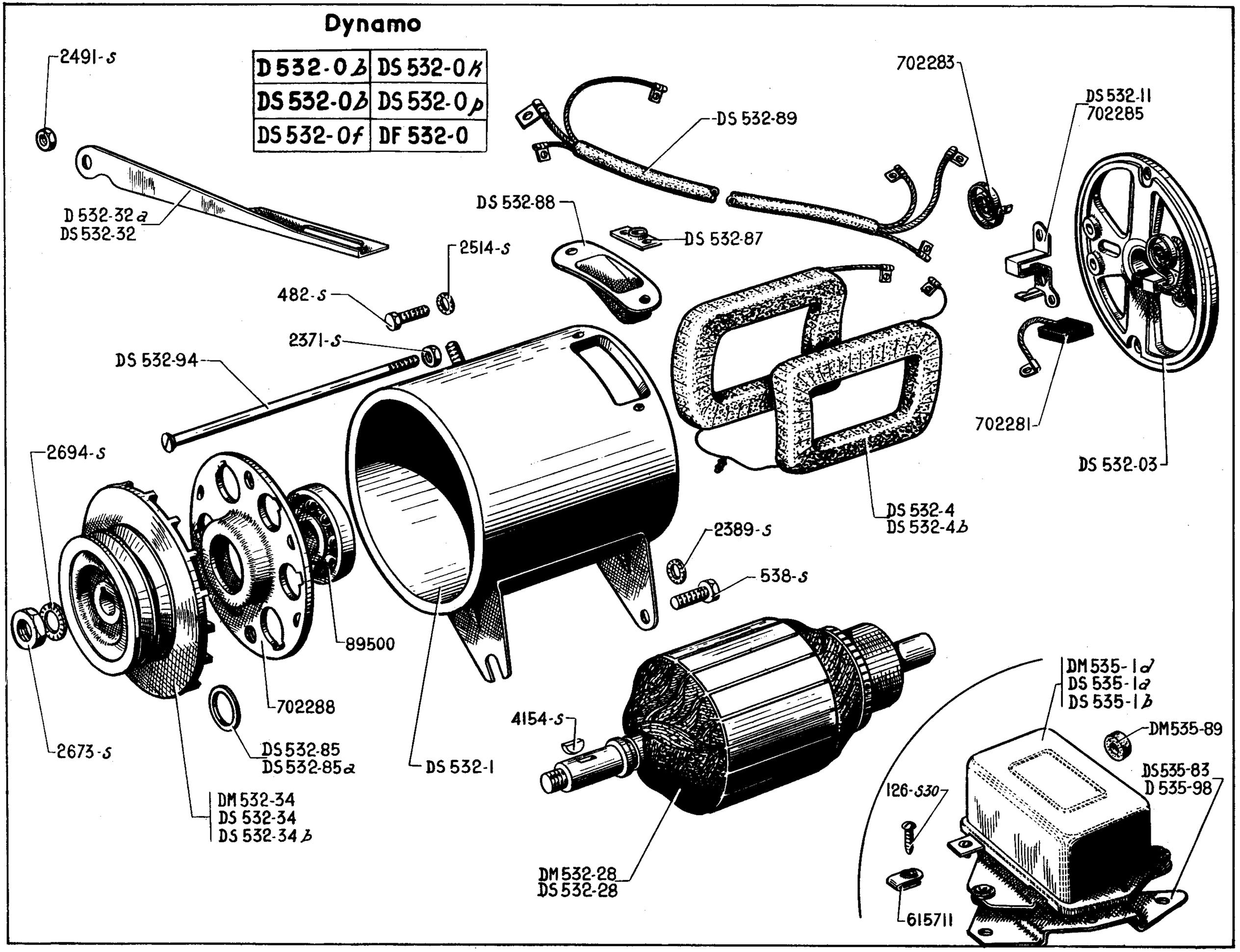

NUMBER	DESCRIPTION	No. OFF
	UNTIL OCTOBER 1961	
D 532-0b	Dynamo complete, 6 volts (arrangement with suspension pump pulley with one groove) (R. VI). Until July 1956.	1
DF 532-0	Dynamo complete, 12 volts, with pulley, with one groove (R. VI). Since September 1960.	1
DS 532-0b	Dynamo complete, 6 volts (arrangement with suspension pump pulley with two grooves) (R. VI). July 1956 - May 1959.	1 1
DS 532-0f	Dynamo complete, 6 volts, fixing of adjusting stay by stud (R. VI). February 1960 - September 1960.	1
DS 532-0k	Dynamo complete, 6 volts, pulley without key (R. VI). U.S.A. Until December 1959.	1
DS 532-0p	Dynamo complete, 12 volts, with pulley with two grooves (R. VI). PRESTIGE. June 1959 - September 1960. U.S.A. December 1959 - September 1960.	1
DS 532-03	Bearing end plate with brush holders without brush or spring (R. VI).	1
DS 532-1	Body, only, with plate for adjusting stay (R. VI). Until February 1960.	1
DS 532-4	Field coils, 6 volts, (set of 2) (R. VI). U.S.A. Until December 1959. All Types. Until September 1960.	1
DS 532-4b	Field coils, 12 volts (R. VI). PRESTIGE. Since June 1959. U.S.A. Since December 1959. All Types. Since September 1960.	1
DS 532-11	Brush holder, positive (R. VI).	1

NUMBER	DESCRIPTION	No. OFF
DM 532-28	Armature, 12 volts (R. VI). PRESTIGE. Since June 1959. U.S.A. Since December 1959. All Types. Since September 1960.	1
DS 532-28	Armature, 6 volts (R. VI). U.S.A. Until December 1959.	1
D 532-32a	Adjusting stay. U.S.A. Until December 1959. 6 volts. Until February 1960.	1
DS 532-32	Adjusting stay, fixing on stud. PRESTIGE. Since June 1959. U.S.A. Since December 1959. 6 volts. Until February 1960. All Types. 12 volts. Since September 1960.	1
DM 532-34	Pulley with one groove (R. VI). Since September 1960.	1
DS 532-34	Pulley (R. VI). Until July 1956.	1
DS 532-34b	Pulley (R. VI). July 1956 - September 1960.	1
DS 532-85	Washer, 17.2 x 26 x 1, for pulley adjustment. Since May 1959.	As nec.
DS 532-85a	Washer, 17.2 x 26 x 0.5, for pulley adjustment. Since May 1959.	As nec.
DS 532-87	Plate for wiring (R. VI).	1
DS 532-88	Support for wiring (R. VI).	1
DS 532-89	Wiring from dynamo (R. VI).	1
DS 532-94	Rod for assembling dynamo (R. VI).	2
DS 535-1a	Regulator, Ducellier, 6 volts (8184. A) (R. VI). U.S.A. Until December 1959. All Types. Until September 1960.	1
DS 535-1b	*Regulator SNA 6 volts (ED 3 S.57). (R. VI). Replaced by DS 535-1a.*	1
DM 535-1d	Regulator, 12 volts, Ducellier (R. VI). PRESTIGE. Since June 1959. U.S.A. Since December 1959. All Types. Since September 1960.	1

NUMBER	DESCRIPTION	No. OFF
DS 535-83	Support for 12 volt regulator. PRESTIGE. Since June 1959. U.S.A. Since December 1959. All Types. Until September 1960.	1
DM 535-89	Rubber buffer for regulator. Since September 1960.	1
D 535-98	Support securing 6 volt regulator on body. U.S.A. Until December 1959. All Types. Until September 1960.	1
126-S 30	Screw, round head, 5 diameter x 18 long, pointed, securing regulator (R. III).	3
482-S	Screw, hex. head, 7 diameter x 12.5 long, securing adjusting stay on dynamo (R. III). Until September 1960.	1
538-S	Screw, hex. head, 9 diameter x 25 long, securing dynamo on flywheel housing (R. III).	2
2.371-S	Nut, hex., 6 diameter x 100 pitch, for screws tightening end bearing plates (R. III).	2
2.389-S	Washer, shakeproof, 9.5 x 16.5, for screws securing dynamo (R. VI).	2
2.491-S	Nut, hex., 7 diameter x 100 pitch (R. III) securing: - stay on water pump. - stay on dynamo. Since September 1960.	 1 1
2.514-S	Washer, shakeproof, 7.3 x 12, for screws securing stay (R. VI).	2
2.673-S	Nut, hex. 12 diameter 175 pitch securing pulley (R.III).	1
2.694-S	Washer, shakeproof, 12.5 x 22, for pulley nut (R. VI).	1
4.154-S	Woodruff key, 4.6 x 5 x 16, for pulley (R. III).	1
89.500	Bearing, 17 x 40 x 12 (R. VI).	1
615.711	Nut clips for 5 mm screw securing regulator (R. VI).	3
702.281	Brush (R. VI).	2
702.283	Spring for brush (R. VI).	2
702.285	Brush holder, negative (R. VI).	1
702.288	Bearing end plate, driving end, fitted with bearing (R. VI).	1

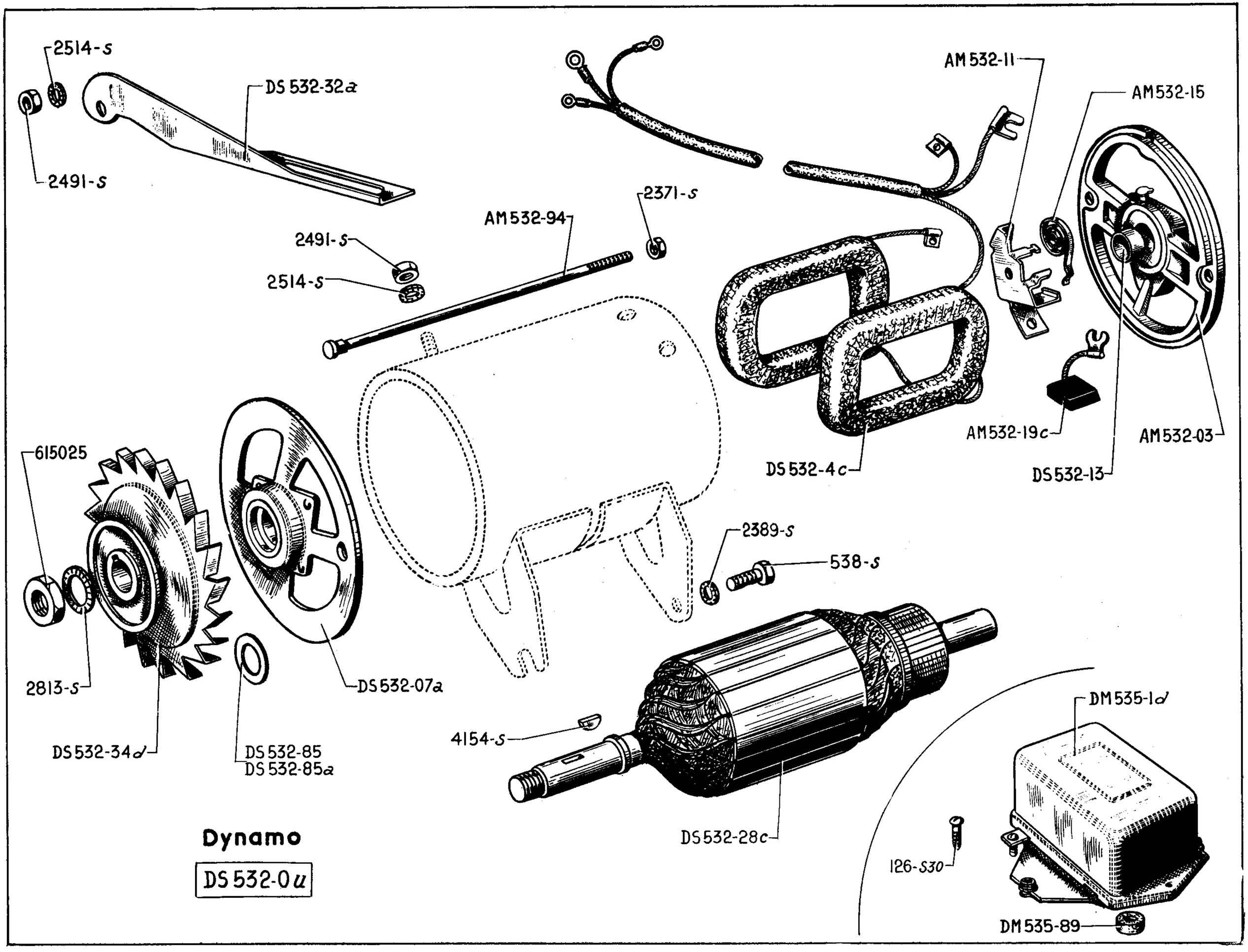

Dynamo

DS 532-0u

NUMBER	DESCRIPTION	No. OFF
	SINCE OCTOBER 1961	
AM 532-03	Bearing end plate, brush gear end (R. VI).	1
AM 532-11	Brush holder (R. VI).	2
AM 532-15	Spring for brush (R. VI).	2
AM 532-19c	Brush, positive and negative (R. VI).	2
AM 532-94	Rod, 6 x 173, for assembling end bearing plates (R. VI).	2
DS 532-0u	Dynamo complete, 103 mm diameter (R. VI).	1
DS 532-07a	Bearing end plate, driving end (R. VI).	1
DS 532-4c	Field coils (set) (R. VI).	1
DS 532-13	Bush for bearing end plate, brush gear end (R. VI).	1
DS 532-28c	Armature (R. VI).	1
DS 532-32a	Adjusting stay for belt.	1
DS 532-34d	Pulley (R. VI).	1
DS 532-85	Washer, 17.2 x 26 x 1, for adjustment of pulley.	As nec.
DS 532-85a	Washer, 17.2 x 26 x 0.5, for adjustment of pulley.	As nec.
DM 535-1d	Regulator, Ducellier, 12 volts (8.243) (R. VI).	1
DM 535-89	Buffer, rubber, for regulator.	1
126-S 30	Screw, round head, 5 diameter x 18 long, pointed, securing regulator (R. III).	2
538-S	Screw, hex. head, 9 diameter x 25 long, securing dynamo on flywheel housing (R. III).	2
2.371-S	Nut, hex., 6 diameter x 100 pitch, for rods securing bearing end plates (R. III).	2
2.389-S	Washer, shakeproof, 9.5 x 16.5 for screws securing dynamo (R. VI).	2
2.491-S	Nut, hex., 7 diameter x 100 pitch, securing adjusting stay on water pump and dynamo (R. III).	2
2.514-S	Washer, shakeproof, 7.3 x 12, for nut securing adjusting stay (R. VI).	2
2.813-S	Washer, shakeproof, 16.5 x 26, for nut securing pulley (R. VI).	1
4.154-S	Woodruff key, 4 x 6.5 x 16, for pulley (R. III).	1
615.025	Nut, hex., 16 diameter x 125 pitch, securing pulley (R. III).	1

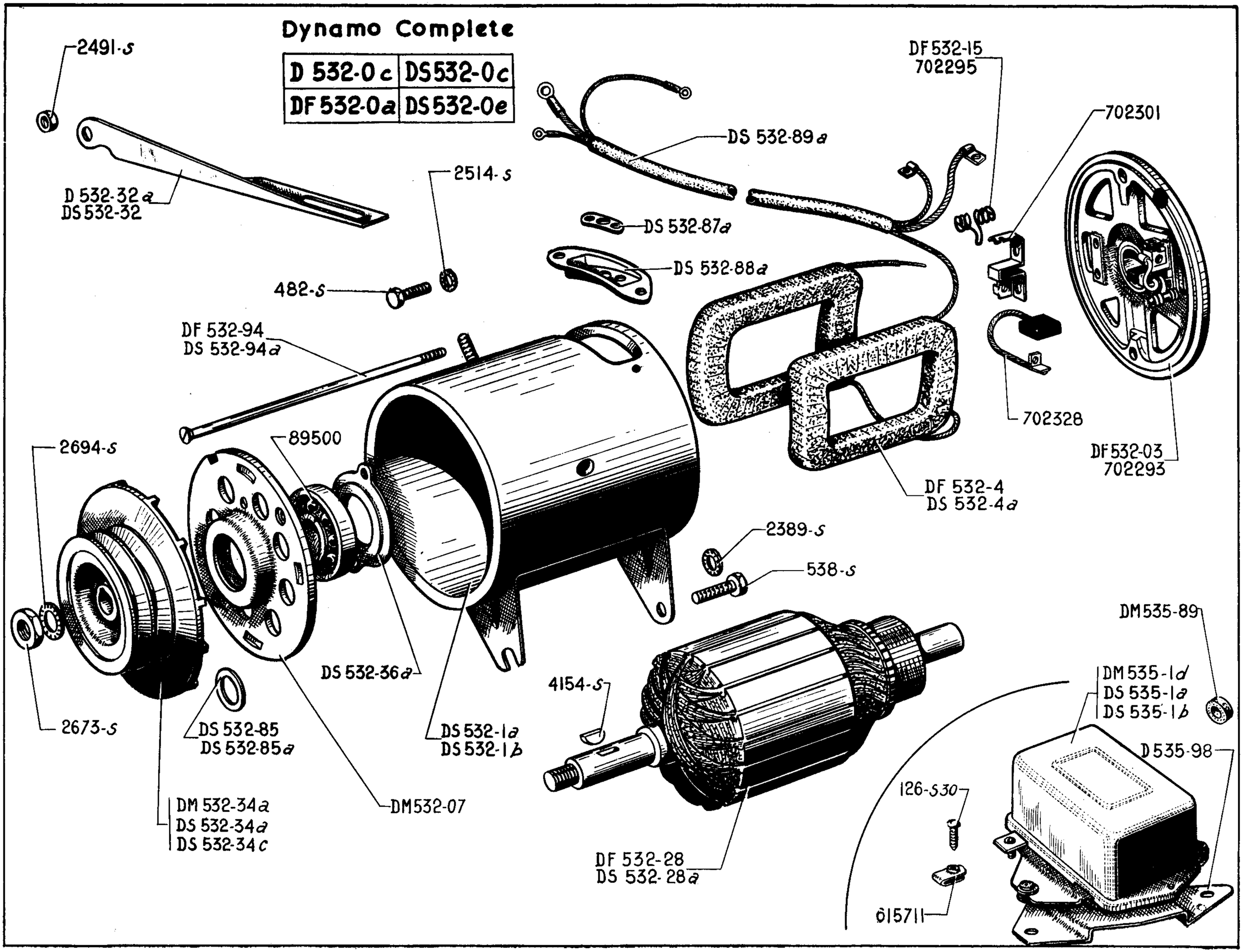
Dynamo Complete
D 532-0c
DS532-0c
DF 532-0a
DS532-0e
2491-s
D 532-32a
DS 532-32
2514-s
482-s
DS 532-89a
DS 532-87a
DS 532-88a
DF 532-15
702295
702301
702328
DF 532-03
702293
DF 532-94
DS 532-94a
89500
2694-s
DF 532-4
DS 532-4a
2389-s
538-s
DM535-89
DS 532-36a
4154-s
DM 535-1d
DS 535-1a
DS 535-1b
2673-s
DS 532-85
DS 532-85a
DS 532-1a
DS 532-1b
D 535-98
126-S30
DM 532-34a
DS 532-34a
DS 532-34c
DM532-07
DF 532-28
DS 532-28a
615711

NUMBER	DESCRIPTION	No. OFF
	UNTIL OCTOBER 1961	
D 532-0c	Dynamo complete, 6 volts (arrangement with suspension pump pulley with one groove) (R. VI). Until July 1956.	1
DF 532-0a	Dynamo complete, 12 volts, with pulley with one groove (R. VI). Since September 1960.	1
DS 532-0c	Dynamo complete, 6 volts (arrangement with suspension pump pulley with two grooves) (R. VI). July 1956 - February 1960.	1
DS 532-0e	Dynamo complete, 6 volts, adjusting stay fixed by stud (R. VI). February 1960 - September 1960.	1
DF 532-03	Bearing end plate, brush gear end (R. VI). Since September 1960.	1
DM 532-07	Bearing end plate complete with bearing, driving end (R. VI).	1
DS 532-1a	Body, only (R. VI). Until July 1956.	1
DS 532-1b	Body, only (R. VI). July 1956 - September 1960.	1
DF 532-4	Field coils, 12 volts (set of 2) (R. VI). Since September 1960.	1
DS 532-4a	Field coils, 6 volts (set of 2) (R. VI). Until September 1960.	1
DF 532-15	Spring for brush holder (R. VI). Since September 1960.	2

NUMBER	DESCRIPTION	No. OFF
DF 532-28	Armature, 12 volts (R. VI). Since September 1960.	1
DS 532-28a	Armature, 6 volts (R. VI). Until September 1960.	1
D 532-32a	Adjusting stay for belt. Until February 1960.	1
DS 532-32	Adjusting stay for belt, fixing by stud. Since February 1960.	1
DM 532-34a	Pulley (R. VI). Since September 1960.	1
DS 532-34a	Pulley (R. VI). Until July 1956.	1
DS 532-34c	Pulley (R. VI). July 1956 - September 1960.	1
DS 532-36a	Plate securing bearing (R. VI).	1
DS 532-85	Washer, 26 x 17.2 x 1, for pulley adjustment. Since September 1960.	As nec.
DS 532-85a	Washer, 26 x 17.2 x 0.5, for pulley adjustment. Since September 1960.	As nec.
DS 532-87a	Plate retaining wiring (R. VI).	1
DS 532-88a	Support for wiring (R. VI).	1
DS 532-89a	Output wiring from dynamo (R. VI).	1
DF 532-94	Rod assembling bearing end plates (R. VI). Since September 1960.	2
DS 532-94a	Rod assembling bearing end plates (R. VI). Until September 1960.	2
DM 535-1d	Regulator, Ducellier, 12 volts (8.243) (R. VI). Since September 1960.	1
DS 535-1a	Regulator, Ducellier, 6 volts (8.184A) (R. VI).	1
DS 535-1b	*Regulator SNA 6 volts (ED. 3S.57) (R. VI). Replaced by DS 535-1a.*	1
DM 535-89	Buffer, rubber, for regulator. Since September 1960.	1

NUMBER	DESCRIPTION	No. OFF
D 535-98	Support securing regulator on body. Until September 1960.	1
126-S 30	Screw, round head pointed, 5 diameter x 18 long, securing regulator (R. III).	3
482-S	Screw, hex. head, 7 diameter x 12.5 long, securing adjusting stay on dynamo (R. III). Until September 1960.	1
538-S	Screw, hex. head, 9 diameter x 25 long, securing dynamo on flywheel housing (R. III). Until September 1960.	1
2.389-S	Washer, shakeproof, 9.5 x 16.5, for screw securing dynamo (R. VI).	2
2.491-S	Nut, hex., 7 diameter x 100 pitch (R. III) securing :	
	- adjusting stay on water pump.	1
	- adjusting stay on water pump and dynamo.	2
2.514-S	Washer, shakeproof, 7.3 x 12, for screws securing adjusting stay (R. VI).	2
2.673-S	Nut, hex., 12 diameter x 175 pitch, securing pulley (R. III).	1
2.694-S	Washer, shakeproof, 12.5 x 22, for pulley nut (R. VI).	1
4.154-S	Woodruff key, 4 x 6.5 x 16, for pulley (R. III).	1
89.500	Bearing, 17 x 40 x 12 (R. VI).	1
615.711	Nut clips, for 5 mm screw securing regulator (R. VI).	3
702.293	Bearing end plate complete, brush gear end (R. VI). Until September 1960.	1
702.295	Spring for brush (R. VI). Until September 1960.	2
702.301	*Brush holder (R. VI). No longer supplied.*	2
702.328	Brush positive and negative (R. VI).	2

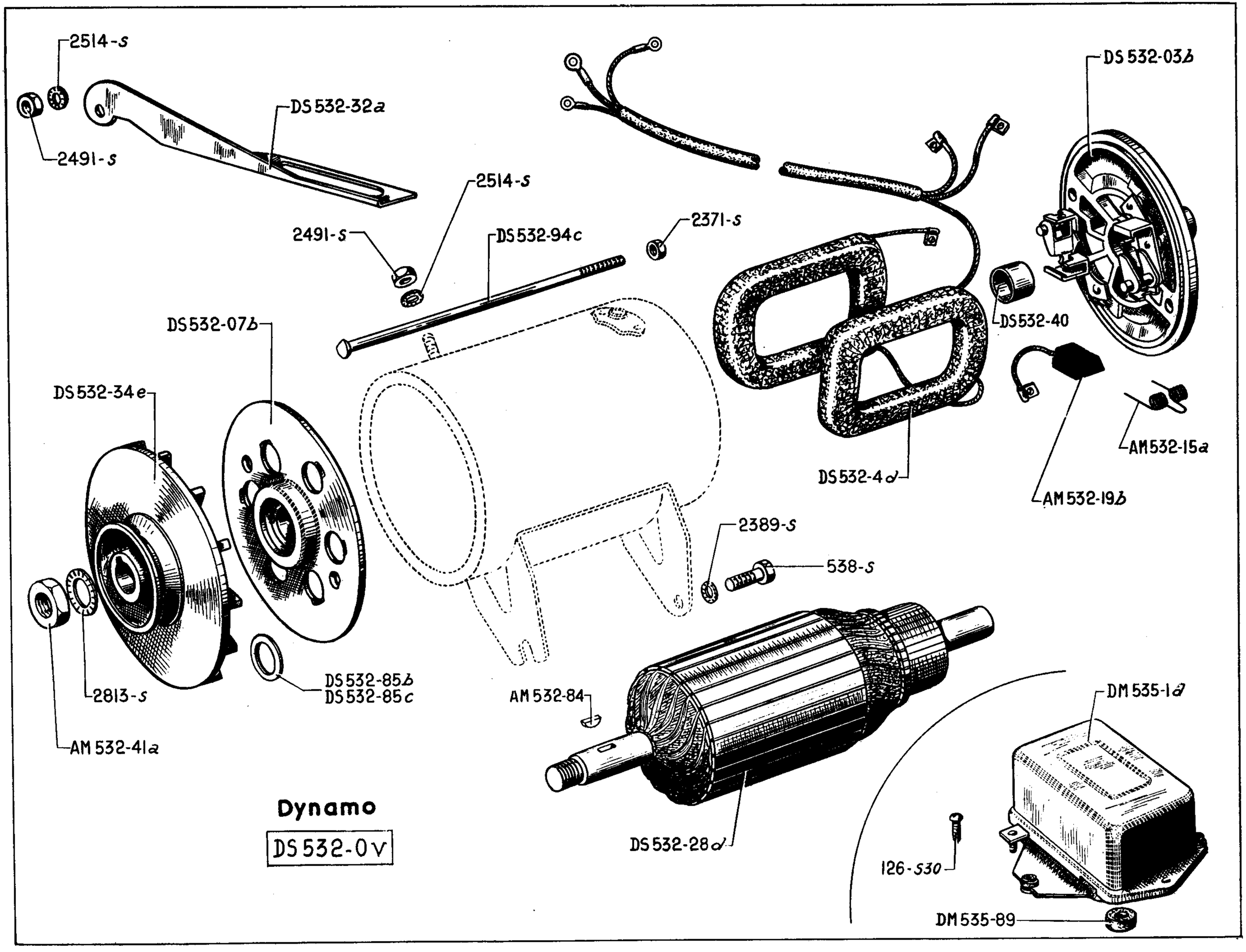

Dynamo

DS 532-0V

NUMBER	DESCRIPTION	No. OFF
	SINCE OCTOBER 1961	
AM 532-15a	Spring for brush (R. VI).	2
AM 532-19b	Brush positive and negative (R. VI).	2
AM 532-41a	Nut, hex., 15 diameter x 150 pitch, securing pulley (R. VI).	1
AM 532-84	Key securing pulley (R. VI).	1
DS 532-0v	Dynamo complete, 103 mm diameter (R. VI).	1
DS 532-03b	Bearing end plate, brush gear end (R. VI).	1
DS 532-07b	Bearing end plate with bearing driving end (R. VI).	1
DS 532-4d	Field coils (set) (R. VI).	1
DS 532-28d	Armature (R. VI).	1
DS 532-32a	Adjusting stay for belt.	1
DS 532-34e	Pulley (R. VI).	1
DS 532-40	Bearing for end plate, brush gear end (R. VI).	1
DS 532-85b	Washer, 15.2 x 23 x 1, for pulley adjustment.	As nec.
DS 532-85c	Washer, 15.2 x 23 x 0.05, for pulley adjustment.	As nec.
DS 532-94c	Rod for assembling bearing end plates (R. VI).	2
DM 535-1d	Regulator, Ducellier, 12 volts (8.243)(R. VI).	1
DM 535-89	Buffer, rubber, for regulator.	1
126-S 30	Screw, round head, 5 diameter x 18 long, pointed, securing regulator (R. III).	2
538-S	Screw, hex. head, 9 diameter x 25 long, securing dynamo on flywheel housing (R. III).	2
2.371-S	Nut, hex., 6 diameter x 100 pitch, for rods securing bearing end plates (R. III).	2
2.389-S	Washer, shakeproof, 9.5 x 16.5, for screws securing dynamo (R. VI).	2
2.491-S	Nut, hex., 7 diameter x 100 pitch, securing adjusting stay on water pump and dynamo (R. III).	2
2.514-S	Washer, shakeproof, 7.3 x 12, for nuts securing adjusting stay (R. VI).	2
2.813-S	Washer, shakeproof, 16.5 x 26, for nut securing pulley (R. VI).	1

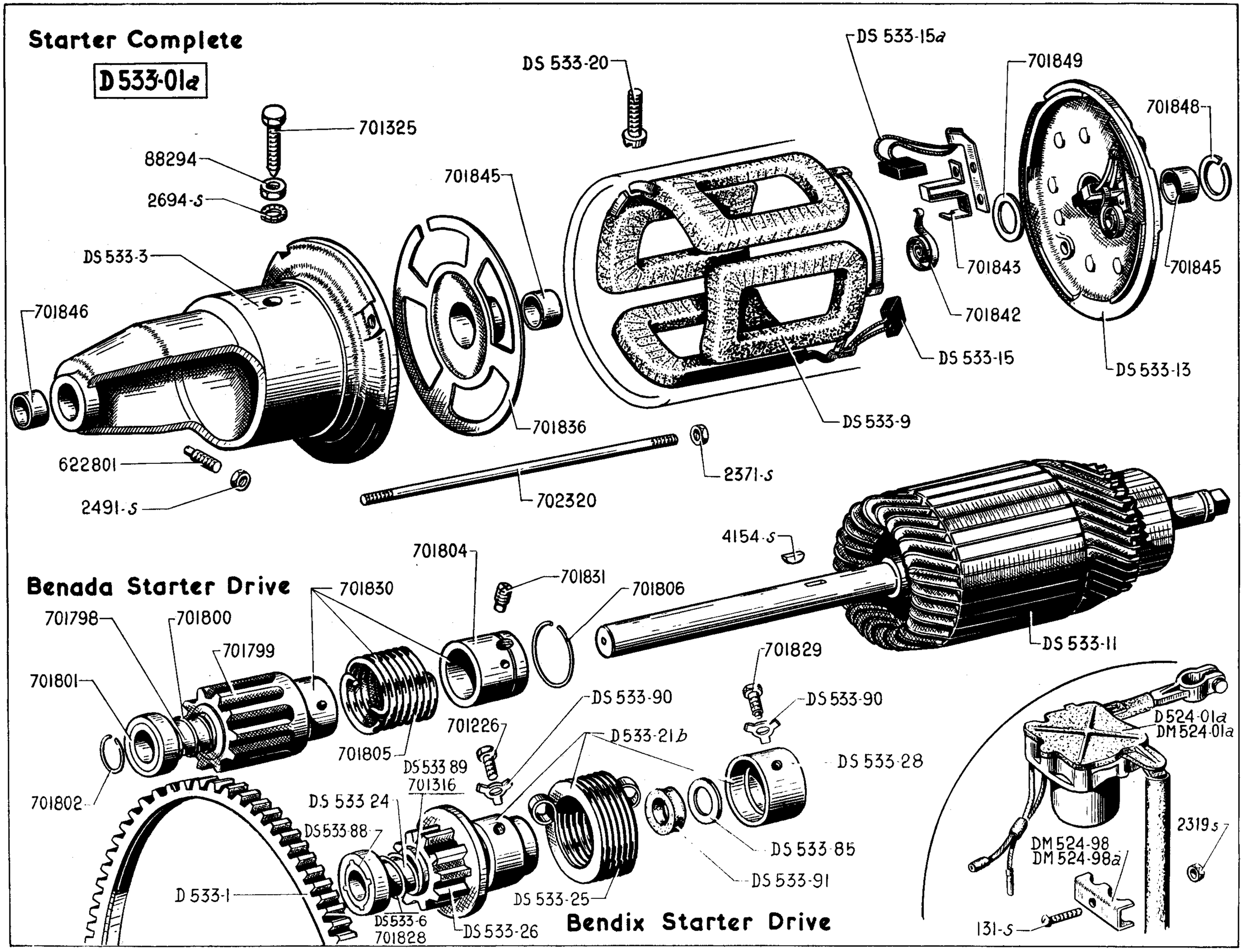
Starter Complete
D533-01a
701325
88294
2694-s
DS 533-3
701846
701845
DS 533-20
DS 533-15a
701849
701848
701843
701845
701842
DS 533-15
DS 533-13
DS 533-9
701836
622801
2491-s
702320
2371-s
4154-s
DS 533-11
Benada Starter Drive
701804
701831
701806
701830
701798
701800
701799
701801
701829
DS 533-90
DS 533-90
701226
D533-21b
701805
DS 533 89
701316
DS 533-28
701802
DS 533 24
DS533-88
DS 533-85
DS 533-91
D 533-1
DS 533-25
DS533-6
701828
DS 533-26
Bendix Starter Drive
D524-01a
DM524-01a
2319s
DM 524-98
DM 524-98a
131-s

NUMBER	DESCRIPTION	No. OFF
	U.S.A. **Until December 1959** **ALL TYPES** **Until September 1960**	
D 524-01a	Solenoid, Ducellier, for starter motor (R. VI). Until July 1957.	1
DM 524-01a	Solenoid, Gelbon, for starter motor with 20 mm^2 cable (R. VI) Since November 1958. Replaces solenoid fitted since July 1957; order in addition: 2-DM 524-98a.	1
DM 524-98	Clamp retaining Gelbon solenoid cable. July 1957 - November 1958.	2
DM 524-98a	Clamp retaining 20 mm^2 for starter solenoid. Since November 1958.	2
D 533-01a	Starter motor complete (R. VI).	1
D 533-1	Starter gear ring (93 teeth, 272 mm diameter).	1
DS 533-3	Bearing end plate for starter motor, driving end (R. VI).	1
DS 533-9	Field coils (set of 4) (R. VI).	1
DS 533-11	Armature (R. VI).	1
DS 533-13	Bearing end plate complete, brush gear end (R. VI).	1
DS 533-15	Brush, positive (R. VI).	1
DS 533-15a	Brush, negative (R. VI).	1
DS 533-20	Terminal, only (R. VI).	1
131-S	Screw, round head, 5 diameter x 30 long, securing clamp for Gelbon solenoid (R. III). Since July 1957.	1
2.319-S	Nut, hex., 5 diameter x 75 pitch, for screw securing clamp for Gelbon solenoid (R. III). Since July 1957.	1
2.371-S	Nut, hex., 6 diameter x 100 pitch, securing bearing end plates (R. III).	2

NUMBER	DESCRIPTION	No. OFF
2.491-S	Nut, hex., 7 diameter x 100 pitch for starter reaction screw (R. III).	2
2.694-S	Washer, shakeproof, 12.5 x 22, for nut securing starter motor on engine (R. VI).	1
4.154-S	Key, Woodruff, 4 x 6.5 x 16, for Bendix drive (R. III).	1
88.294	Nut, hex., 12 diameter x 150 pitch, securing starter on engine (R. II).	1
622.801	Grub screw, 7 diameter x 20 long, for starter motor reaction (R. III).	2
701.325	Screw, hex. head, 12 diameter x 150 pitch, 42 mm long, under head, securing starter motor on engine (R. III).	1
701.836	Intermediate bearing plate (R. VI).	1
701.842	Spring for brush (R. VI).	2
701.843	Brush holder (R. VI).	2
701.845	Bush, 16.2 x 19 x 15, for bearing end plate, brush gear end and intermediate bearing plate (R. VI).	2
701.846	Bush, 16 x 19 x 14, for bearing end plate,driving end (R. VI).	1
701.848	Circlip (R. VI).	1
701.849	Thrust washer, brush gear end (R. VI).	As nec.
702.320	Rod for assembling bearing end plates (R. VI).	1
	BENADA STARTER DRIVE	
701.798	Threaded sleeve, only (R. VI).	1
701.799	Pinion (R. VI).	1
701.800	Spring for pinion (R. VI).	1
701.801	Thrust ring for pinion (R. VI).	1
701.802	Circlip for thrust ring (R. VI).	1
701.804	Driving sleeve (R. VI).	1
701.805	Driving spring (R. VI).	1
701.806	Circlip for driving sleeve (R. VI).	1

NUMBER	DESCRIPTION	No. OFF
701.830	Starter drive complete (R. VI).	1
701.831	Grub screw with dowel, 6 mm diameter, locking driving sleeve (R. VI).	1
	BENDIX STARTER DRIVE WITH DAMPER **Since January 1957**	
DS 533-6	Spring for pinion (R. VI). Since September 1957.	1
D 533-21b	Starter pinion drive complete (R. VI).	1
DS 533-24	Threaded sleeve, only (R. VI).	1
DS 533-25	Driving spring (R. VI).	1
DS 533-26	Pinion (R. VI).	1
DS 533-28	Driving sleeve (R. VI).	1
DS 533-85	Washer for damper bush (R. VI).	1
DS 533-88	Thrust nut for pinion spring (R. VI). Since September 1957.	1
DS 533-89	Distance washer retaining pinion spring (R. VI). Since September 1957.	1
DS 533-90	Lockplate for screw of drive sleeve and threaded sleeve (R. VI).	2
DS 533-91	Rubber bush for damper (R. VI).	1
701.226	Screw, hex. head, 9.5 diameter x 16 long, for threaded sleeve (R. VI).	1
701.316	Distance piece (R. VI). Until September 1957.	1
701.828	Spring for pinion (R. VI). Until September 1957.	1
701.829	Screw, hex. head, 9.5 diameter x 20 long (dowel 6 mm diameter for the driving sleeve) (R. VI).	1

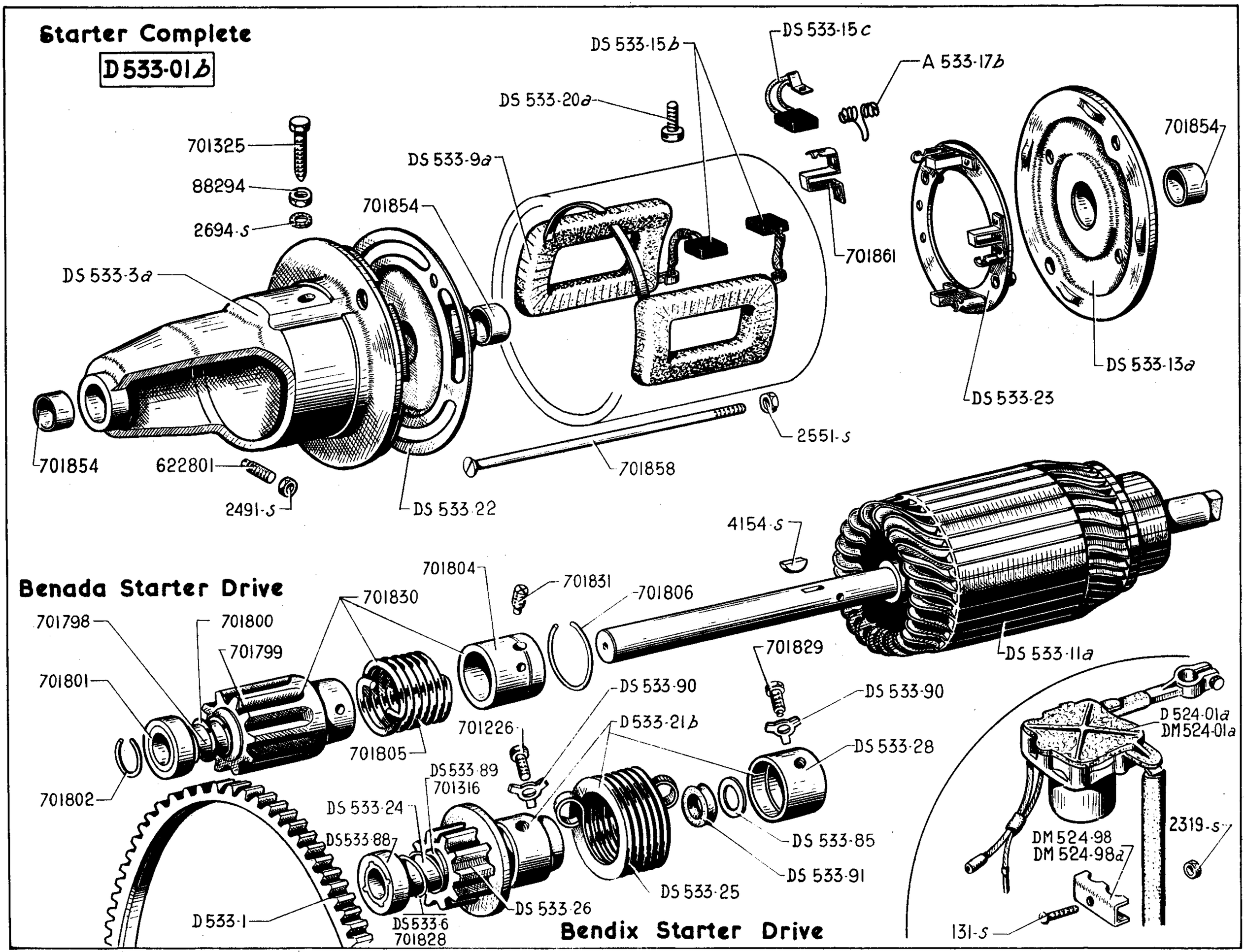
Starter Complete
D 533-01b
DS 533-15b
DS 533-15c
A 533-17b
DS 533-20a
701325
88294
2694-s
DS 533-9a
701854
701861
701854
DS 533-3a
DS 533-13a
DS 533-23
2551-s
701854
622801
701858
2491-s
DS 533-22
4154-s
701804
701831
701806
Benada Starter Drive
701830
701798
701800
701799
701829
DS 533-11a
701801
DS 533-90
DS 533-90
D 524-01a
DM 524-01a
701226
D 533-21b
DS 533-28
701805
DS 533-89
701316
701802
DS 533-24
2319-s
DS 533-85
DS533-88
DM 524-98
DM 524-98a
DS 533-91
DS 533-25
DS 533-26
D 533-1
DS533-6
701828
Bendix Starter Drive
131-s

NUMBER	DESCRIPTION	No. OFF
	U.S.A. **Until December 1959** **ALL TYPES** **Until September 1960**	
A 533-17b	Brush spring (R. VI).	4
D 524-01a	Ducellier starter solenoid switch (R. VI). Until July 1957.	1
DM 524-01a	Gelbon starter solenoid switch with 20 mm cable (R. VI). Since November 1958. Replaces solenoid fitted since July 1957; order in addition: 2-DM 524-98a.	1
DM 524-98	Clamp retaining cable for Gelbon solenoid. July 1957 - November 1958.	2
DM 524-98a	Clamp retaining 20 mm^2 cable for starter solenoid. Since November 1958.	2
D 533-01b	Starter motor complete (R. VI).	1
D 533-1	Starter gear ring, (272 mm diameter, 93 teeth).	1
DS 533-3a	Bearing end plate, driving end (R. VI).	1
DS 533-9a	Field coils (set of 2) (R. VI).	1
DS 533-11a	Armature (R. VI).	1
DS 533-13a	Bearing end plate only, brush gear end (R. VI).	1
DS 533-15b	Brush, positive (R. VI).	2
DS 533-15c	Brush, negative (R. VI).	2
DS 533-20a	Terminal only (R. VI).	1
DS 533-22	Intermediate bearing plate (R. VI).	1
DS 533-23	Brush holder ring with brushes and spring (R. VI).	1
131-S	Screw, round head, 5 diameter x 30 long, securing clamp for Gelbon solenoid (R. III). Since July 1957.	1
2.319-S	Nut, hex., 5 diameter x 75 pitch, for screw securing clamp for Gelbon solenoid (R. III). Since July 1957.	1
2.491-S	Nut, hex., 7 diameter x 100 pitch, for starter reaction screw (R. III).	2
2.551-S	Nut, hex., 8 diameter x 125 pitch, securing bearing end plates (R. III).	2
2.694-S	Washer, shakeproof, 12.5 x 22, for nuts securing starter motor on engine (R. VI).	1
4.154-S	Woodruff key, 4 x 6.5 x 16, for pinion drive (R. III).	1
88.294	Nut, hex., 12 diameter x 150 pitch, securing starter motor on engine (R. VI).	1
622.801	Grub screw, 7 diameter x 20 long, for starter reaction (R. III).	2
701.325	Screw, hex. head, 12 diameter x 150 pitch, securing starter motor on engine, length under head 42 mm (R. III).	1
701.854	Bush for bearing end plates (R. VI).	3
701.858	Rod, 8 x 175, for assembling end bearing plates (R. VI).	2
701.861	Brush holder (R. VI).	4
	BENADA STARTER DRIVE	
701.798	Threaded sleeve only (R. VI).	1
701.799	Pinion (R. VI).	1
701.800	Spring for pinion (R. VI).	1
701.801	Thrust ring for pinion (R. VI).	1
701.802	Circlip for thrust ring for pinion (R. VI).	1
701.804	Driving sleeve (R. VI).	1
701.805	Driving spring (R. VI).	1
701.806	Circlip for driving sleeve (R. VI).	1
701.830	Pinion drive complete (R. VI).	1
701.831	Grub screw with 6 mm diameter dowel locking driving sleeve (R. VI).	1
	BENDIX STARTER DRIVE WITH DAMPER **Since January 1957**	
DS 533-6	Spring for pinion (R. VI). Since September 1957.	1
D 533-21b	Pinion drive complete (R. VI).	1
DS 533-24	Threaded sleeve, only (R. VI).	1
DS 533-25	Driving spring (R. VI).	1
DS 533-26	Pinion (R. VI).	1
DS 533-28	Driving sleeve (R. VI).	1
DS 533-85	Washer for damper bush (R. VI).	1
DS 533-88	Thrust nut for pinion spring (R. VI). Since September 1957.	1
DS 533-89	Distance washer retaining pinion spring (R. VI). Since September 1957.	1
DS 533-90	Lockplate for screw of driving sleeve and threaded sleeve (R. VI).	2
DS 533-91	Rubber bush for damper (R. VI).	1
701.226	Screw, hex. head, 9.5 x 16, for threaded sleeve (R. VI).	1
701.316	Distance piece (R. VI). Until September 1957.	1
701.828	Pinion spring (R. VI). Until September 1957.	1
701.829	Screw, hex. head, 9.5 x 20 (6 mm dowel) for driving sleeve (R. VI).	1

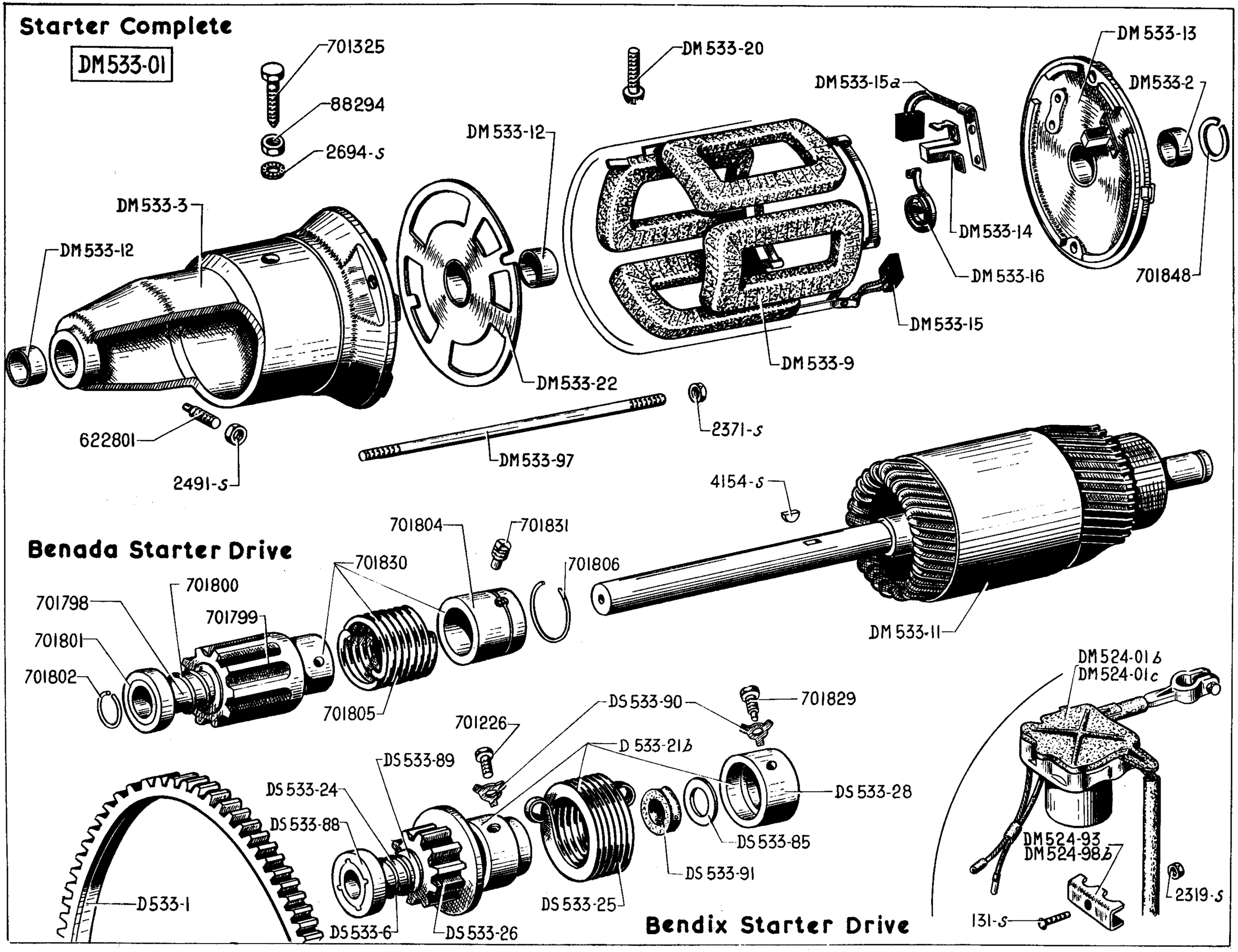
Starter Complete
DM533-01
701325
88294
2694-s
DM533-20
DM533-13
DM533-15a
DM533-2
DM533-12
DM533-3
DM533-12
DM533-14
DM533-16
701848
DM533-15
DM533-9
DM533-22
622801
2491-s
DM533-97
2371-s
4154-s
DM533-11
Benada Starter Drive
701804
701831
701830
701806
701798
701800
701799
701801
701802
701805
DM524-01b
DM524-01c
DS533-90
701829
701226
D533-21b
DS533-89
DS533-24
DS533-28
DS533-88
DS533-85
DM524-93
DM524-98b
DS533-91
2319-s
D533-1
DS533-25
131-s
DS533-6
DS533-26
Bendix Starter Drive

NUMBER	DESCRIPTION	No. OFF
	PRESTIGE **Since June 1959** **U.S.A.** **Since December 1959** **ALL TYPES** **Since September 1960**	
DM 524-01b	*Solenoid "Gelbon" 12 volts for starter motor (R. VI). Until August 1961. Replaced by DM 524-01c.*	1
DM 524-01c	Solenoid "Gelbon" 12 volts (R. VI) August 1961 - September 1962.	1
DS 524-01a	Solenoid "Gelbon" 12 volts (R. VI). Since September 1962.	1
DM 524-93	Clamp with welded screw, securing solenoid. Since August 1961.	1
DM 524-98b	Clamp retaining solenoid for starter motor. Until August 1961. Since August 1961.	 2 1
DM 533-01	Starter motor complete (R. VI). Until September 1962.	1
DS 533-01a	Starter motor complete (R. VI). Since September 1962.	1
D 533-1	Starter gear ring (93 teeth, 272 mm diameter).	1
DM 533-2	Bush 12 x 15 x 15, for end bearing plate, brush gear end (R. VI).	1
DM 533-3	End bearing plate, driving end (R. VI).	1
DM 533-9	Field coils (set of 4) (R. VI).	1
DM 533-11	Armature (R. VI).	1
DM 533-12	Bush 16 x 19 x 12 for bearing plates, intermediate and driving end (R. VI).	2
DM 533-13	Bearing end plate complete, brush gear end (R. VI).	1
DM 533-14	Brush holder (R. VI).	2

NUMBER	DESCRIPTION	No. OFF
DM 533-15	Brush, positive (R. VI).	1
DM 533-15a	Brush, negative (R. VI).	1
DM 533-16	Spring for brush (R. VI).	2
DM 533-20	Terminal only (R. VI).	1
DM 533-22	Intermediate bearing plate (R. VI).	2
DM 533-97	Rod for assembling starter motor (R. VI).	1
DS 533-100	Shield for starter motor. Since September 1962.	1
DS 533-102	Support with welded nuts for starter motor screen. Since September 1962.	1
131-S	Screw, round head 5 diameter x 30 long securing clamp for solenoid (R. III).	1
2.319-S	Nut, hex. 5 diameter x 75 pitch for screw for securing clamp for solenoid (R. III).	1
2.371-S	Nut, hex. 6 diameter x 100 pitch securing end bearing plates (R. III).	2
2.491-S	Nut, hex. 7 diameter x 100 pitch for starter motor reaction screw (R.III).	2
2.694-S	Washer, shakeproof 12.5 x 22 for nut securing starter motor on engine (R. VI).	1
4.154-S	Woodruff key 4 x 6.5 x 16 for pinion drive (R. III).	1
88.294	Nut, hex. 12 diameter 150 pitch securing starter motor on engine (R. II).	1
622.801	Grub screw 7 diameter x 20 long for starter motor reaction (R. III).	2
701.325	Screw hex. head 12 diameter 150 pitch, length under head 42 mm, securing starter motor on engine (R. III).	1
701.848	Circlip (R. VI).	1
	BENADA STARTER DRIVE	
701.798	Threaded sleeve, only (R. VI).	1
701.799	Pinion (R. VI).	1

NUMBER	DESCRIPTION	No. OFF
701.800	Spring for pinion (R. VI).	1
701.801	Thrust ring for pinion (R. VI).	1
701.802	Circlip for thrust ring (R. VI).	1
701.804	Driving sleeve (R. VI).	1
701.805	Driving spring (R. VI).	1
701.806	Circlip for driving sleeve (R. VI).	1
701.830	Starter drive complete (R. VI).	1
701.831	Grub screw with 6 mm dowel for locking driving sleeve (R. VI).	1
	BENDIX STARTER DRIVE WITH DAMPER	
DS 533-6	Spring for pinion (R. VI).	1
D 533-21b	Starter drive complete (R. VI).	1
DS 533-24	Threaded sleeve, only (R. VI).	1
DS 533-25	Driving spring (R. VI).	1
DS 533-26	Pinion (R. VI).	1
DS 533-28	Driving sleeve (R. VI).	1
DS 533-85	Washer 16 x 21 x 0.3 for damper bush (R. VI).	1
DS 533-88	Thrust nut for pinion spring (R. VI).	1
DS 533-89	Distance washer for pinion spring (R. VI).	1
DS 533-90	Lockplate for screw of driving sleeve and threaded sleeve (R. VI).	2
DS 533-91	Bush, rubber 16 x 26.5 x 10.5 for damper (R. VI).	1
701.226	Screw, hex. head 9.5 x 16 for threaded sleeve (R. VI).	1
701.829	Screw, hex. head 9.5 x 20 with 6 mm dowel, for driving sleeve (R. VI).	1

The numbers underlined indicate new parts and do not appear on the illustrations.

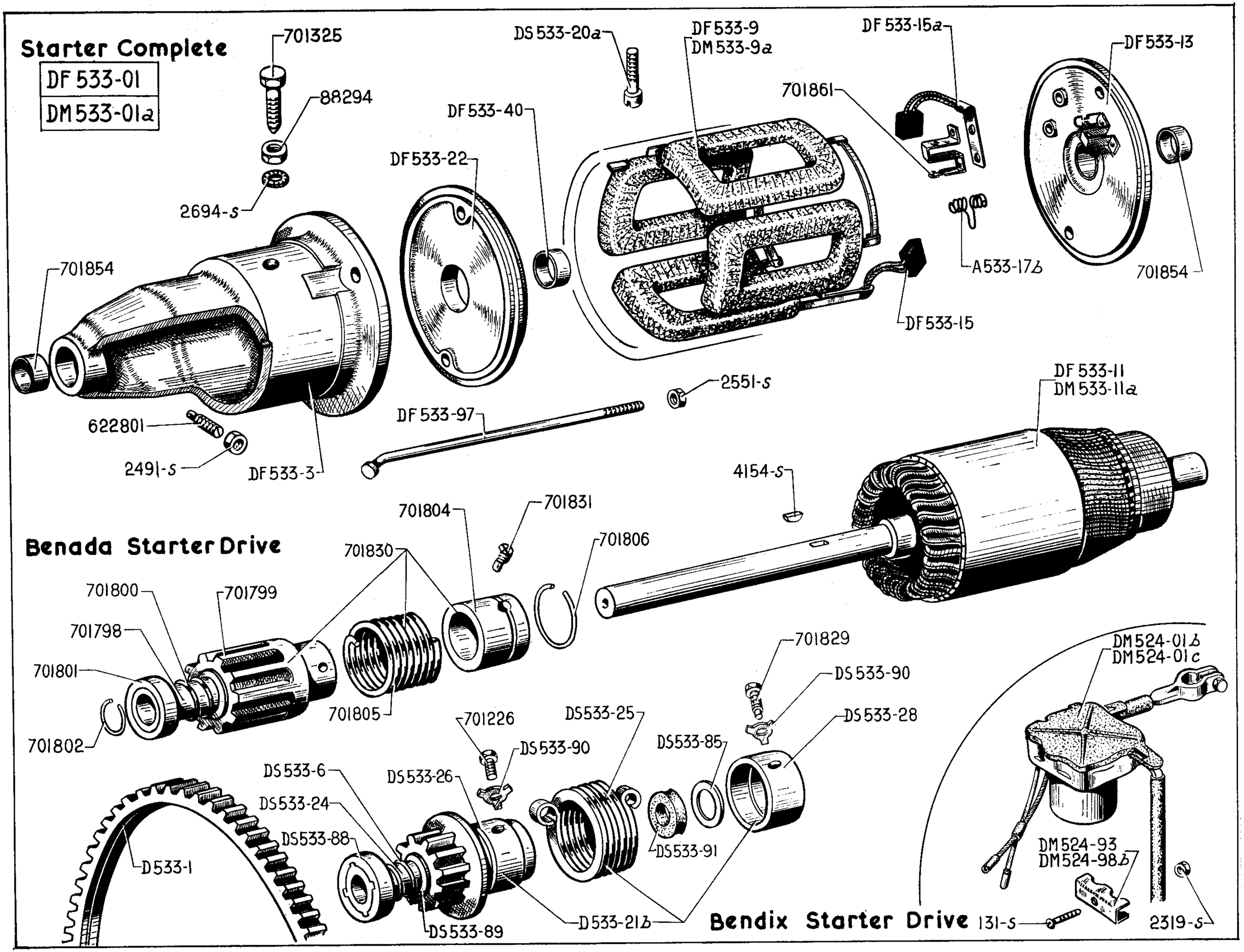
Starter Complete
DF 533-01
DM 533-01a
701325
88294
2694-s
DS 533-20a
DF 533-9
DM 533-9a
DF 533-15a
DF 533-13
701861
DF 533-40
DF 533-22
701854
A533-17b
701854
DF 533-15
2551-s
DF 533-11
DM 533-11a
DF 533-97
622801
2491-s
DF 533-3
4154-s
701804
701831
701806
Benada Starter Drive
701830
701800
701799
701798
701801
701805
701802
701829
DS 533-90
DS 533-28
DM524-01b
DM524-01c
701226
DS533-25
DS533-90
DS533-85
DS533-6
DS533-26
DS533-24
DS533-88
DS533-91
D533-1
DM524-93
DM524-98b
DS533-89
D533-21b
Bendix Starter Drive
131-s
2319-s

NUMBER	DESCRIPTION	No. OFF
	Since September 1960	
A 533-17b	Spring for brush (R.VI).	4
DM 524-01b	*Solenoid "Gelbon" 12 volts (R. VI). Until August 1961 Replaced by DM 524-01c.*	1
DM 524-01c	Solenoid "Gelbon" 12 volts (R.VI). August 1961 - September 1962.	1
DS 524-01a	Solenoid, "Gelbon" 12 volts (R.VI) Since September 1962.	1
DM 524-93	Clamp with welded screw, securing solenoid. Since August 1961.	1
DM 524-98b	Clamp, retaining starter solenoid Until August 1961. Since August 1961	2 1
DF 533-01	Starter motor complete (R.VI). Until January 1962.	1
DM 533-01a	Starter motor complete (R.VI). January 1962 - September 1962.	1
DS 533-01b	Starter motor complete (R.VI). Since September 1962.	1
D 533-1	Starter gear ring (93 teeth, 272 mm. diameter)	1
DF 533-3	Bearing end plate securing starter motor, driving end (R.VI).	1
DF 533-9	Field coils (R.VI). Until January 1962	1
DM 533-9a	Field coils (R.VI).Since January 1962.	1
DF 533-11	Armature (R.VI). Until January 1962	1
DM 533-11a	Armature (R.VI). Since January 1962	1
DF 533-13	Bearing end plate, brush gear end (R.VI).	1
DF 533-15	Brush, positive (R.VI).	2
DF 533-15a	Brush, negative (R.VI).	2
DS 533-20a	Terminal, only (R.VI).	1
DF 533-22	Bearing plate, intermediate (R.VI).	1
DF 533-40	Bush 16 x 20 x 16 for intermediate (R.VI).	1

NUMBER	DESCRIPTION	No. OFF
DF 533-97	Rod for assembling bearing end plates (R. VI).	2
DS 533-100	Shield for starter motor. Since September 1962.	1
DS 533-102	Support with welded nut for starter motor shield. Since September 1962.	1
131-S	Screw, round head 5 diameter 30 long securing solenoid clamp (R.III).	1
2.319-S	Nut, hex. 5 diameter 75 pitch for screw securing solenoid clamp (R. III).	1
2.491-S	Nut, hex 7 diameter 100 pitch for starter motor reaction screws (R. III).	2
2.551-S	Nut, hex. 8 diameter 125 pitch securing bearing end plates (R. III).	2
2.694-S	Washer, shakeproof 12.5 x 22 for nut securing starter motor on engine (R. VI).	1
4.154-S	Woodruff key 4 x 6.5 x 16 for starter pinion drive (R. III).	1
88.294	Nut, hex 12 diameter 150 pitch securing starter motor on engine (R. II).	1
622.801	Grub screw 7 diameter 20 long for starter motor reaction (R. III).	2
701.325	Screw, hex. head 12 diameter 150 pitch 42 mm long under head, securing starter motor on engine (R. III).	1
701.854	Bush for bearing end plates, driving end and brush gear end (R. VI).	2
701.861	Brush holder (R. VI).	4
	BENADA STARTER DRIVE	
701.798	Threaded sleeve, only (R. VI).	1
701.799	Pinion (R. VI).	1

NUMBER	DESCRIPTION	No. OFF
701.800	Spring for pinion (R. VI).	1
701.801	Thrust ring for pinion (R. VI).	1
701.802	Circlip for thrust ring (R. VI).	1
701.804	Driving sleeve (R. VI).	1
701.805	Driving spring (R. VI).	1
701.806	Circlip securing driving sleeve (R. VI).	1
701.830	Starter drive complete (R. VI).	1
701.831	Grub screw with 6 mm diameter for driving sleeve (R. VI).	1
	BENDIX STARTER DRIVE WITH DAMPER	
DS 533-6	Spring for pinion (R. VI).	1
D 533-21b	Starter drive complete (R. VI).	1
DS 533-24	Threaded sleeve, only (R. VI).	1
DS 533-25	Driving spring (R. VI).	1
DS 533-26	Pinion (R. VI).	1
DS 533-28	Driving sleeve (R. VI).	1
DS 533-85	Washer 16 x 21 x 0.3 for damper bush (R . VI).	1
DS 533-88	Thrust nut for pinion spring (R. VI).	1
DS 533-89	Distance washer for pinion spring (R. VI).	1
DS 533-90	Lockplate for screw of driving sleeve and threaded sleeve (R. VI).	2
DS 533-91	Bush, rubber for damper 16 x 26.5 x 10.5 (R. VI).	1
701.226	Screw, hex. head 9.5 x 16 for threaded sleeve (R. VI).	1
701.829	Screw, hex. head 9.5 x 20 with 6 mm dowel, for driving sleeve (R. VI).	1

The numbers underlined indicate new parts and do not appear on the illustrations.

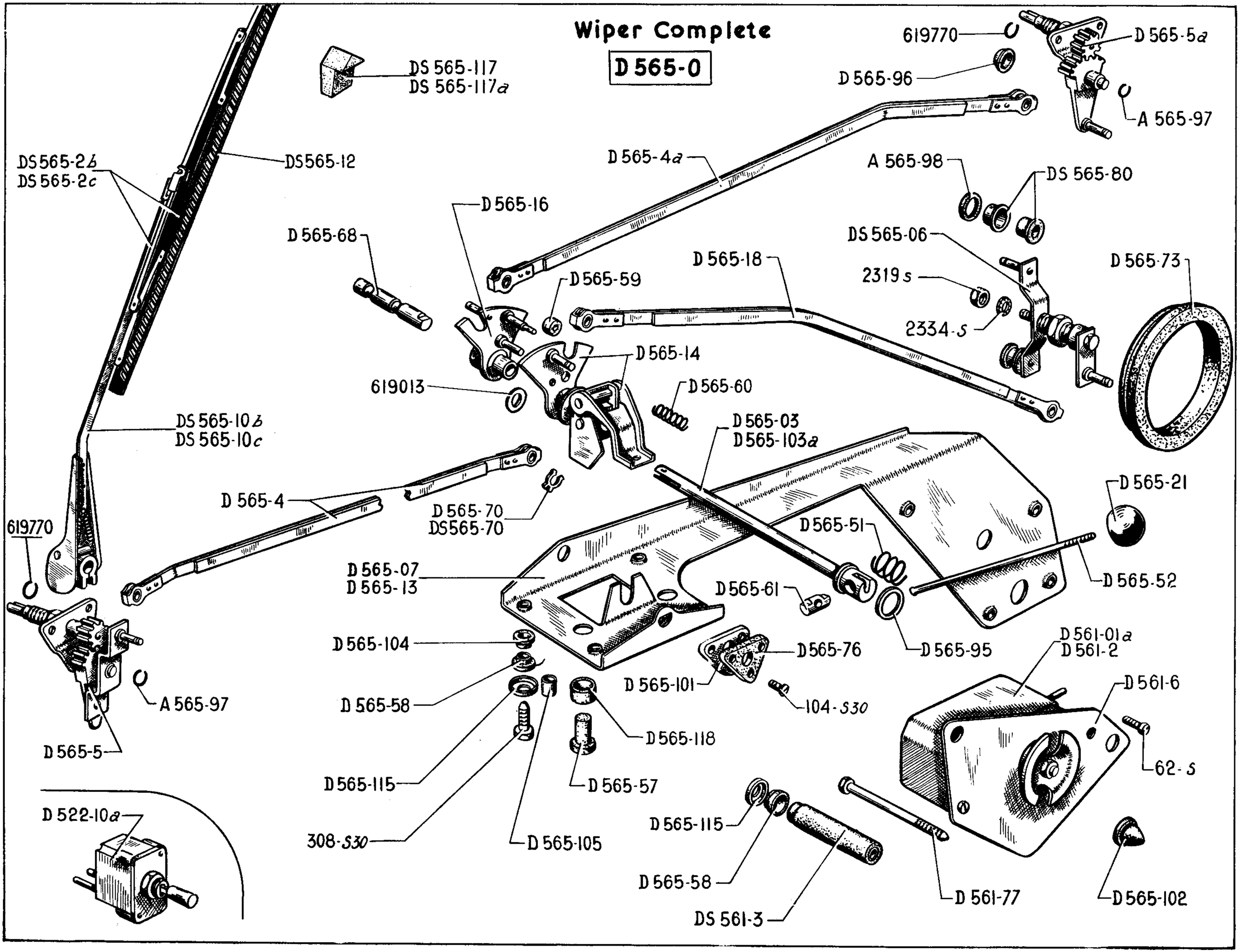
Wiper Complete
D 565-0
DS 565-117
DS 565-117a
619770
D 565-5a
D 565-96
A 565-97
DS565-12
DS565-2b
DS 565-2c
D 565-4a
A 565-98
DS 565-80
D 565-16
D 565-68
DS 565-06
D 565-18
D 565-73
D 565-59
2319 s
2334-s
D 565-14
619013
D 565-60
DS 565-10b
DS 565-10c
D 565-03
D 565-103a
D 565-21
D 565-4
D 565-70
DS565-70
619770
D 565-51
D 565-07
D 565-13
D 565-52
D 565-61
D 565-104
D 565-76
D 565-95
D 561-01a
D 561-2
D 565-101
D 565-6
A 565-97
D 565-58
104-S30
D 565-118
D 565-5
62-S
D 565-115
D 565-57
D 522-10a
D 565-115
308-S30
D 565-105
D 565-58
D 561-77
D 565-102
DS 561-3

NUMBER	DESCRIPTION	No. OFF
	UNTIL MAY 1960	
A 565-97	Circlip for wiper arm driving sector (R.VI).	2
A 565-98	Washer 4.2 x 7 x 0.5 on flexible sleeve	2
D 522-10a	Switch on dashboard (R.VI).	1
D 561-01a	Motor 12 volts (R.VI). PRESTIGE Since June 1959. U.S.A. Since December 1959.	1
D 561-2	Motor 6 volts (R.VI). U.S.A. Until December 1959.	1
DS 561-3	Rubber tube 8 x 20 x 47.5 with distance piece for screw securing motor (R.VI).	3
D 561-6	Plate securing motor (R.VI).	1
D 561-77	Screw, hex. head 6 x 62 securing motor	1
D 565-0	Windscreen wiper complete 6 volts (R.VI).	1
D 565-03	Hand control complete (R.VI).	1
DS 565-06	Spindle assembly with bush operating linkage (R.VI).	1
DS 565-07	Windscreen wiper linkage complete with blades and hand control (without motor) (R.VI).	1
DS 565-2b	Wiper arm complete, left hand (R.VI)	1
DS 565-2c	Wiper arm complete, right hand (R.VI)	1
D 565-4	Connecting link, operating wiper arm, left hand, 526.5 mm. between centres (R.VI).	1
D 565-4a	Connecting link, operating wiper arm right hand, 342 mm between centres (R.VI).	1
D 565-5	Bracket for wiper arm spindle, left hand (R.VI).	1
D 565-5a	Bracket for wiper arm spindle, right hand (R.VI).	1
DS 565-10b	Wiper arm, left hand (R.VI).	1
DS 565-10c	Wiper arm, right hand (R.VI).	1
DS 565-12	Wiper blade (R.VI).	2
D 565-13	Bracket for windscreen wiper operating mechanism (R.VI).	1
D 565-14	Pivotting plate operating link rods (R.VI).	1
D 565-16	End plate for manual operation (R.VI).	1
D 565-18	Operating link (R.VI).	1
D 565-21	Knob for rod operating hand control (R.VI).	1
D 565-51	Spring 16.5 x 22 for hand operation swivel (R.VI).	1
D 565-52	Rod for hand operation, 123 mm. long (R.VI).	1
D 565-57	Flexible stop for pivotting plate (R.VI).	2
D 565-58	Bush, rubber, shouldered 12 x 20 x 17 x 6 for screw securing motor on scuttle (R.VI).	8
D 565-59	Stud operating pivotting plate (R.VI).	1
D 565-60	Compression spring 9 x 28 for cam (R.VI).	1
D 565-61	Swivel pin on shaft for hand operation (R.VI).	1
D 565-68	Spindle for pivotting plate, 68 mm. long (R.VI).	1
D 565-70	Clip maintaining flexible sleeves on double crank (R.VI).	2
DS 565-70	Clip maintaining linkage (R.VI).	As nec.
D 565-73	Washer, rubber 50 x 70 x 8 sealing bracket	1
D 565-76	Plate, rubber for hand operation bearing bracket (R.VI).	1
DS 565-80	Flexible sleeve, bushed on shaft operating linkage (R.VI).	2
D 565-95	Thrust washer for spring on hand operating control (R.VI).	1
D 565-96	Sealing cap on wiper arm spindle (R.VI).	2
D 565-101	Bearing plate for hand operation control (R.VI).	1
D 565-102	Buffer for glovebox on bracket	1
D 565-103a	Shaft for hand operation control (R.VI).	1
D 565-104	Bush, rubber 8 x 20 x 8 on bracket	8
D 565-105	Distance tube 7 x 8 x 12.5 for bush on bracket (R.VI).	5
D 565-115	Cup washer for rubber bush on plate and motor bracket (R.VI).	5

NUMBER	DESCRIPTION	No. OFF
DS 565-117	Stop for wiper arm. Until June 1956.	2
DS 565-117a	Stop for wiper arm. Since June 1956.	2
D 565-118	Rubber stop 12 x 20 x 16 for hand operation actuating plate (R. VI).	1

NUMBER	DESCRIPTION	No. OFF
62-S	Screw, round head 4 diameter 7.5 pitch (R. III) securing:	
	- crank arm.	1
	- motor on plate	2
104-S 30	Screw, raised head countersunk, 4 diameter 12.5 long control bearing plate (R. III).	3
308-S 30	Screw, hex. head pointed 6 diameter 25 long securing bracket (R. VI).	5

NUMBER	DESCRIPTION	No. OFF
2.319-S	Nut, hex. 5 diameter 75 pitch securing double crank on intermediate shaft (R. III).	1
2.334-S	Washer, shakeproof 5.2 x 9.4 for locking double crank on intermediate shaft (R. VI).	1
619.013	Washer on pivotting plate (R. VI).	4
619.770	*Circlip on wiper arm spindle (R. VI). No longer supplied.*	2

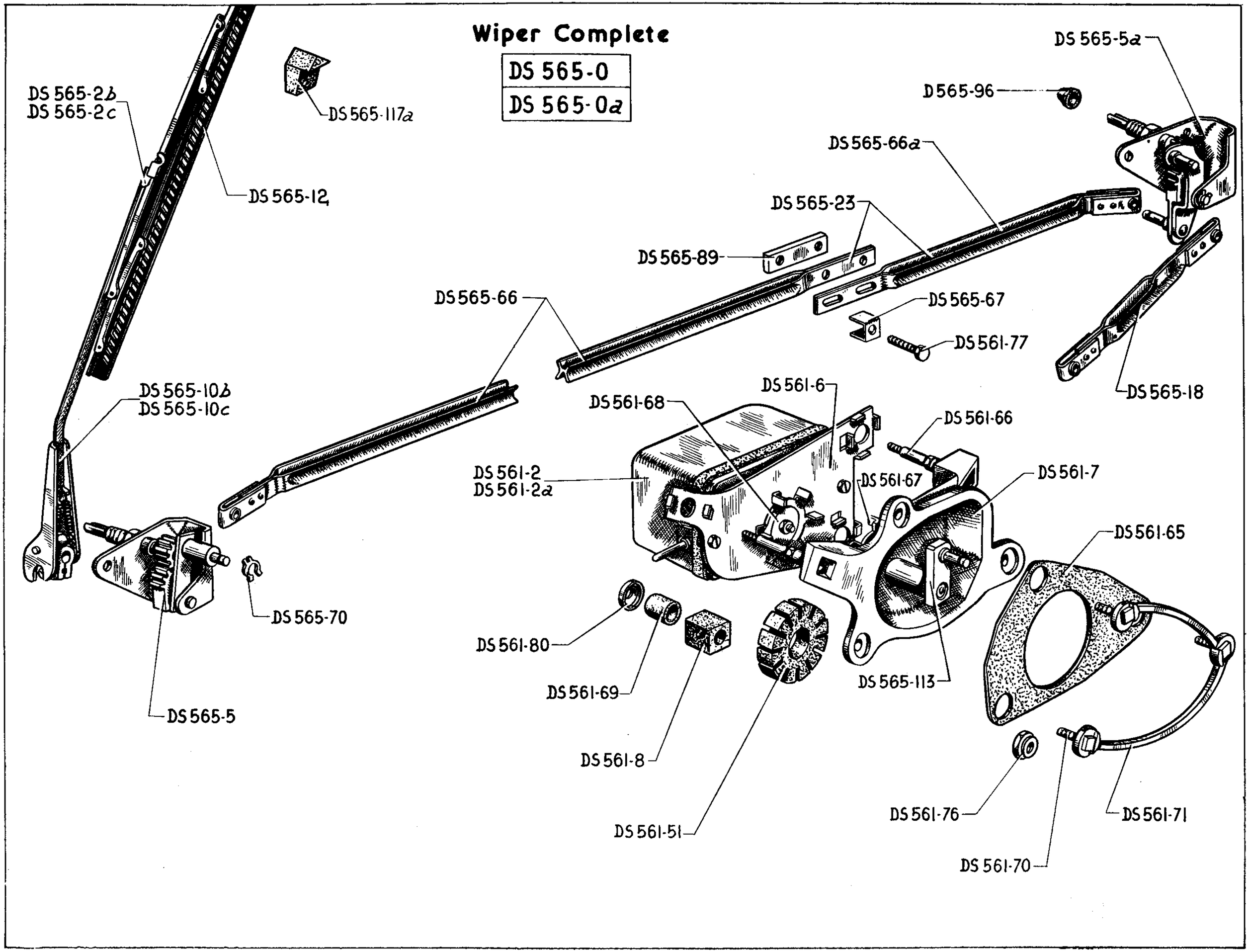
Wiper Complete
DS 565-0
DS 565-0a
DS 565-2b
DS 565-2c
DS 565-117a
DS 565-12
DS 565-5a
D 565-96
DS 565-66a
DS 565-23
DS 565-89
DS 565-66
DS 565-67
DS 561-77
DS 565-18
DS 565-10b
DS 565-10c
DS 561-6
DS 561-68
DS 561-66
DS 561-2
DS 561-2a
DS 561-67
DS 561-7
DS 561-65
DS 565-70
DS 561-80
DS 561-69
DS 565-113
DS 565-5
DS 561-8
DS 561-51
DS 561-76
DS 561-71
DS 561-70

NUMBER	DESCRIPTION	No. OFF
	MAY 1960 - SEPTEMBER 1960	
DS 561-2	Motor 6 volts (R. VI).	1
DS 561-2a	Motor 12 volts (R. VI).	1
DS 561-6	Mounting plate for motor (R. VI).	1
DS 561-7	Support for motor (R. VI).	1
DS 561-8	Rubber block for motor fixing (R. VI).	3
DS 561-51	Rubber drive connecting motor and control (R. VI).	1
DS 561-65	Joint rubber between motor and body (R. VI).	1
DS 561-66	Stud securing motor (R. VI).	3
DS 561-67	Driving plate with spindle, crank side (R. VI).	1
DS 561-68	Driving plate, motor side (R. VI).	1
DS 561-69	Washer, rubber, securing motor (R. VI).	3
DS 561-70	Screw, square head 5 diameter 20 long securing motor support (R. VI).	3
DS 561-71	Nut carrier securing motor support (R. VI).	1
DS 561-76	Nut, shouldered for 5 diameter screws securing motor support (R. VI).	3
DS 561-77	Screw, hex. head assembling linkage (R. VI).	2
DS 561-80	Cup washer for screws securing engine support (R. VI).	3
DS 565-0	Windscreen wiper complete 6 volts (R. VI).	1
DS 565-0a	Windscreen wiper complete 12 volts (R. VI).	1
DS 565-2b	Wiper arm complete, left hand (R. VI).	1
DS 565-2c	Wiper arm complete, right hand (R. VI).	1
DS 565-5	Support for arm spindle, left hand (R. VI).	1
DS 565-5a	Support for arm spindle, right hand (R. VI).	1
DS 565-10b	Wiper arm (without blade), left hand (R. VI).	1
DS 565-10c	Wiper arm (without blade), right hand (R. VI).	1
DS 565-12	Wiper blade (R. VI).	2
DS 565-18	Control linkage (R. VI).	1
DS 565-23	Connecting linkage assembled (R. VI).	1
DS 565-66	Connecting link, left hand (R. VI).	1
DS 565-66a	Connecting link, right hand (R. VI).	1
DS 565-67	Yoke for screw tightening connecting linkage (R. VI).	2
DS 565-70	Clip retaining linkage (R. VI).	4
DS 565-89	Backplate for assembling linkage, 2 tapped holes 6 mm diameter (R. VI).	2
D 565-96	Sealing cap for arm spindle (R. VI).	2
DS 565-113	Cranked control with spindle (R. VI).	1
DS 565-117a	Stop for wiper arm.	2

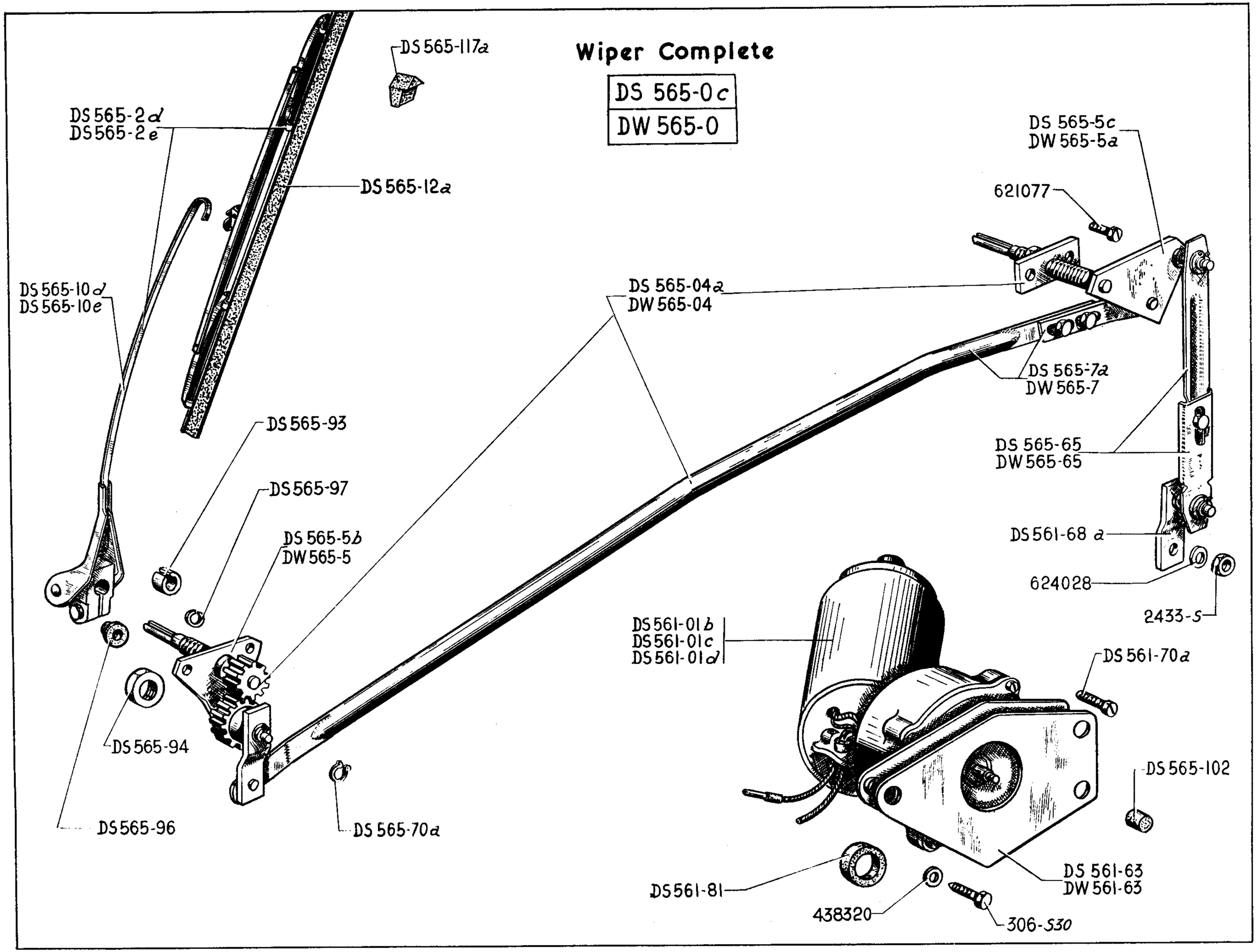
Wiper Complete
DS 565-0c
DW 565-0
DS 565-117a
DS 565-2d
DS 565-2e
DS 565-12a
DS 565-10d
DS 565-10e
DS 565-93
DS 565-97
DS 565-5b
DW 565-5
DS 565-94
DS 565-96
DS 565-70a
DS 565-04a
DW 565-04
DS 565-5c
DW 565-5a
621077
DS 565-7a
DW 565-7
DS 565-65
DW 565-65
DS 561-68 a
624028
2433-S
DS 561-01b
DS 561-01c
DS 561-01d
DS 561-70a
DS 565-102
DS 561-63
DW 561-63
DS 561-81
438320
306-S30

NUMBER	DESCRIPTION	No. OFF
	Since September 1960	
DS 561-01b	Motor 6 volts (R. VI). July 1960 (few cars).	1
DS 561-01c	Motor 12 volts (R. VI). September 1960 - August 1961.	1
DS 561-01d	Motor 12 volts with automatic stop (R. VI). Since August 1961.	1
DS 561-63	Backplate with screws for securing motor (R. VI). Until August 1961.	1
DW 561-63	Backplate without screws for securing motor (R. VI). Since August 1961.	1
DS 561-68a	Control crank (R. VI).	1
DS 561-70a	Screw, round head, securing motor on support (R. VI).	3
DS 561-81	Sealing washer, rubber between motor and support (R. VI).	1
DS 565-0c	Windscreen wiper complete 12 volts (R. VI). Until August 1961.	1
DW 565-0	Windscreen wiper complete 12 volts (motor with automatic stop) (R. VI). Since August 1961.	1
DS 565-04a	Linkage complete without arms (R. VI). Until August 1961.	1
DW 565-04	Linkage complete without arms (R. VI). Since August 1961.	1

NUMBER	DESCRIPTION	No. OFF
DS 565-2d	Wiper arm complete, left hand (R. VI).	1
DS 565-2e	Wiper arm complete, right hand (R. VI).	1
DS 565-5b	Support for arm spindle, left hand (R. VI). Until August 1961.	1
DS 565-5c	Support for arm spindle, right hand (R. VI). Until August 1961.	1
DW 565-5	Support for arm spindle, left hand (R. VI). Since August 1961.	1
DW 565-5a	Support for arm spindle, right hand (R. VI). Since August 1961.	1
DS 565-7a	Connecting rod assembled with end piece (R. VI). Until August 1961.	1
DW 565-7	Connecting rod assembled with end piece (R. VI). Since August 1961.	1
DS 565-10d	Wiper arm without blade, left hand (R. VI).	1
DS 565-10e	Wiper arm without blade, right hand (R. VI).	1
DS 565-12a	Wiper blade (R. VI).	2
DS 565-65	Control rod with end piece (R. VI). Until August 1961.	1
DW 565-65	Control rod with end piece (R. VI). Since August 1961.	1

NUMBER	DESCRIPTION	No. OFF
DS 565-70a	Circlips retaining rods on arm spindles (R. VI).	5
DS 565-93	Bush, split, locking arms on spindles (R. VI).	2
DS 565-94	Nut, hex. securing spindle for arm on body (R. VI).	2
DS 565-96	Cap, rubber sealing arm spindle (R. VI).	2
DS 565-97	Locking circlip, on arm spindle (R. VI).	2
DS 565-102	Stop, rubber for glovebox on backplate screw (R. VI).	1
DS 565-117a	Stop for wiper arm.	2
306-S 30	Screw, hex. head 6 diameter 20 long securing motor on body (R.III).	3
2.433-S	Nut, hex. 6 diameter 100 pitch securing motor on cranked control (R. III).	1
438.320	Washer, 6.5 x 20 x 1.8 for screws securing motor on body (R. II).	3
621.077	Screw, hex. head, 4 diameter 10 long, securing support for arm spindle on body (R. III).	4
624.028	Flexible washer 6.4 x 12 x 0.5 for nut assembling motor on cranked control (R.III).	1

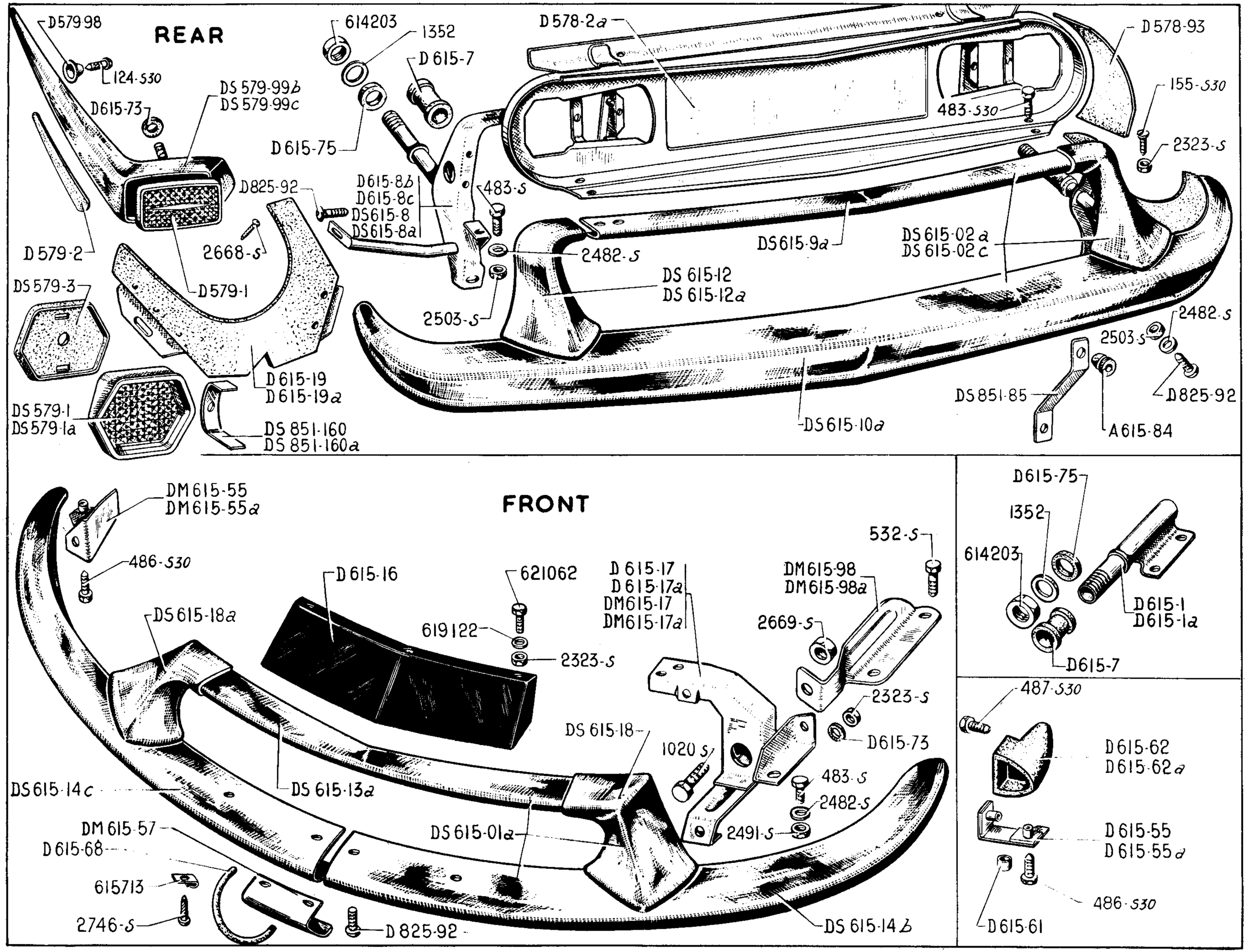
REAR
D579-98
124-S30
D615-73
DS 579-99b
DS 579-99c
D825-92
2668-S
D579-2
D579-1
DS 579-3
DS 579-1
DS 579-1a
D615-19
D615-19a
DS 851-160
DS 851-160a
614203
1352
D615-7
D615-75
D615-8b
D615-8c
DS615-8
DS615-8a
483-S
2482-S
2503-S
DS 615-12
DS 615-12a
D578-2a
DS615-9a
DS 615-02a
DS 615-02c
483-S30
D578-93
155-S30
2323-S
2482-S
2503-S
DS851-85
A615-84
D825-92
DS615-10a
FRONT
DM615-55
DM615-55a
486-S30
DS615-18a
D615-16
621062
619122
2323-S
D 615-17
D 615-17a
DM615-17
DM615-17a
DM615-98
DM615-98a
532-S
2669-S
2323-S
D615-73
DS 615-18
1020 S
483-S
2482-S
2491-S
DS615-14c
DS 615-13a
DS 615-01a
DM 615-57
D615-68
615713
2746-S
D 825-92
DS 615-14b
D615-75
1352
614203
D615-1
D615-1a
D615-7
487-S30
D615-62
D615-62a
D615-55
D615-55a
486-S30
D615-61

NUMBER	DESCRIPTION	No. OFF
	FRONT **Until November 1961**	
DS 615-01a	*Front bumpers complete. Replaced by DS 615-01b.*	1
D 615-1	Fixed support, left hand. Until September 1958.	1
D 615-1a	Fixed support, right hand. Until September 1958.	1
D 615-7	Rubber sleeve.	2
DS 615-13a	*Bumper bar, upper, without end piece. Replaced by DS 615-13b.*	1
DS 615-14a	*Half bumper bar, lower, left-hand. Replaced by DS 615-14d.*	1
DS 615-14c	*Half bumper bar, lower, right-hand. Replaced by DS 615-14e.*	1
D 615-16	Registration number plate.	1
D 615-17	Support, movable left hand. Until September 1958.	1
D 615-17a	Support, movable, right hand. Until September 1958.	1
DM 615-17	Support, left hand without rubber sleeve. Since September 1958.	1
DM 615-17a	Support, right hand without rubber sleeve. Since September 1958.	1
DS 615-18	End piece, left hand.	1
DS 615-18a	End piece, right hand.	1
D 615-55	Bracket, left hand for securing rubber block. Until September 1958.	1
D 615-55a	Bracket, right hand for securing rubber block. Until September 1958.	1

NUMBER	DESCRIPTION	No. OFF
DM 615-55	Support plate for fitting extreme left hand of bumpers. Since September 1958.	1
DM 615-55a	Support plate for fitting extreme right hand of bumpers. Since September 1958.	1
DM 615-57	Reinforcement for assembling lower half bumpers.	1
D 615-61	Distance piece 7.5 x 9.5 x 8 for screw securing rubber block. Until September 1958.	4
D 615-62	Rubber block for fitting at extreme left hand end of bumper. Until September 1958.	1
D 615-62a	Rubber block for fitting at extreme right hand end of bumper. Until September 1958.	1
D 615-68	Rubber packing for lower half bumpers.	1
D 615-73	Washer, rubber 5 x 14 x 2 for end brackets of upper bumpers.	4
D 615-75	Washer, rubber 20 x 30 x 6 on fixed support for bumpers. Until September 1958.	2
DM 615-98	Support, left hand without pivot on body. Since September 1958.	1
DM 615-98a	Support, right hand without pivot on body. Since September 1958.	1
D 825-92	Screw, round head 7 diameter 20 long for assembling lower half bumpers.	2
483-S	Screw, hex. head 7 diameter 15 long securing lower half bumpers on movable support (R. III).	2

NUMBER	DESCRIPTION	No. OFF
486-S 30	Screw, hex. head pointed 7 diameter 22.5 long (R. III) securing: - rubber block on lower bumpers Until September 1958. - for support plate on extreme left and right hand. Since September 1958.	 2 4
487-S 30	Screw, hex. head pointed 7 diameter 25 long securing rubber block on caisson (R. III). Until September 1958.	2
532-S	Screw, hex. head, pointed 9 diameter 28 long, securing bumpers on caisson (R. III).	4
1.020-S	Screw, hex. head, 12 diameter 22 long securing supports on body on bumper supports (R. III). Since September 1958.	2
1.352	Washer 20.5 x 30 x 1.5 for locking fixed support on bumpers (R. I). Until September 1958.	2
2.323-S	Nut, hex. 5 diameter 75 pitch for screws securing upper bumpers and registration number plate (R. III).	3
2.482-S	Washer, 7.5 x 14 for nuts securing lower bumper on movable support (R. III).	2
2.491-S	Nut, hex. 7 diameter 100 pitch for screws securing lower bumpers on movable support (R. III).	2
2.669-S	Nut, hex. 12 diameter 175 pitch for screws securing supports on body on bumper supports (R. III). Since September 1958.	2
2.746-S	Screw round head P.K. cruciform slot 4.85 x 16 securing distance piece on lower bumpers (R. VI).	4

NUMBER	DESCRIPTION	No. OFF
614.203	Nut, hex. 20 diameter 100 pitch locking fixed support on bumpers (R. III). Until September 1958.	2
615.713	Nut clip for 4.85 diameter screws securing distance piece on lower bumper (R. VI).	4
619.122	Washer 5.5 x 12 x 1 for screws securing upper bumper and registration number (R. III).	3
612.062	Screw, hex head, 5 diameter x 14 long, securing upper bumper and registration number (R. III).	3
	REAR Until November 1961	
A 615-84	Rubber stop for rear wing on rear bumper. Since July 1959.	2
D 578-2a	Registration number plate.	1
D 578-93	Rubber lining between bumper and registration number plate.	2
DS 615-02a	*Rear bumpers complete with finishing strip, Until July 1959. Replaced by DS 615-02d.*	1
DS 615-02c	*Rear bumpers complete without finishing strip. Since July 1959. Replaced by DS 615-02d.*	1
D 615-7	Rubber stop.	2
D 615-8b	Movable support, left hand. Until July 1959.	1
D 615-8c	Movable support, right hand. Until July 1959.	1
DS 615-8	Movable support, left hand. SINCE ~~Until~~ July 1959.	1
DS 615-8a	Movable support, right hand. Since July 1959.	1
DS 615-9a	*Bumper bar, upper. Replaced by DS 615-9b.*	1

NUMBER	DESCRIPTION	No. OFF
DS 615-10a	*Bumper bar, lower. Replaced by DS 615-10c.*	1
DS 615-12	End piece, left hand.	1
DS 615-12a	End piece, right hand.	1
D 615-19	Finisher between rear bumper, left hand and rear wing, left hand. Until July 1959.	1
D 615-19a	Finisher between rear bumper, right hand and rear wing right hand. Until July 1959.	1
D 615-75	Anti-rattle washer, rubber 20 x 30 x 6 on fixed support.	2
D 825-92	Screw, round head 7 diameter 20 long securing lower rear bumpers on movable support (R. VI).	4
DS 851-85	Fixing plate for rear wing rubber buffer on rear bumpers. Since July 1959.	2
155-S 30	Screw, raised head pointed 5 diameter 15 long securing upper rear bumper on movable support (R. III).	4
483-S	Screw, hex. head 7 diameter 15 long securing lower bumper on movable support (R. III).	2
483-S 30	Screw, hex. head 7 diameter 15 long securing registration number plate on panel (R. III).	4
1.352	Washer 20.5 x 30 x 1.5 securing fixed support (R. I).	2
2.323-S	Nut, hex. 5 diameter 75 pitch for screws securing upper rear bumper (R. III).	4
2.482-S	Washer 7.5 x 14 for nuts securing lower rear bumper (R. III).	6
2.503-S	Nut, hex. 7 diameter 100 pitch for screws securing lower rear bumper (R. III).	6

NUMBER	DESCRIPTION	No. OFF
2.668-S	Screw P.K. round head 3.5 x 10 securing finishing lining (R. VI).	2
614.203	Nut, hex. 20 diameter 100 pitch locking fixed support (R. III).	2
	REFLECTOR Until July 1959	
D 579-1	Reflector, rear (R. VI).	2
D 579-2	Reflector (paper) lateral rear (R. VI) Until November 1957.	2
D 579-98	Cup for screws securing front of support for reflector.	2
DS 579-99b	Support for reflector, left hand.	1
DS 579-99c	Support for reflector, right hand.	1
D 615-73	Washer, rubber 5 x 14 x 2 for screws securing reflector (R. III).	2
124-S 30	Screw, round head 5 diameter 12.5 long securing support for reflector (R. III).	4
	REFLECTOR July 1959 - November 1961	
DS 579-1	Reflector rear, encased in rear wing (R. VI).	2
DS 579-1a	Reflector, round, encased in rear wing (R. VI). U.S.A.	2
DS 579-3	Joint for round encased reflector (R. VI). U.S.A.	2
DS 851-160	Bracket securing reflector on rear wing.	2
DS 851-160a	Bracket securing reflector on rear wing. U.S.A.	2

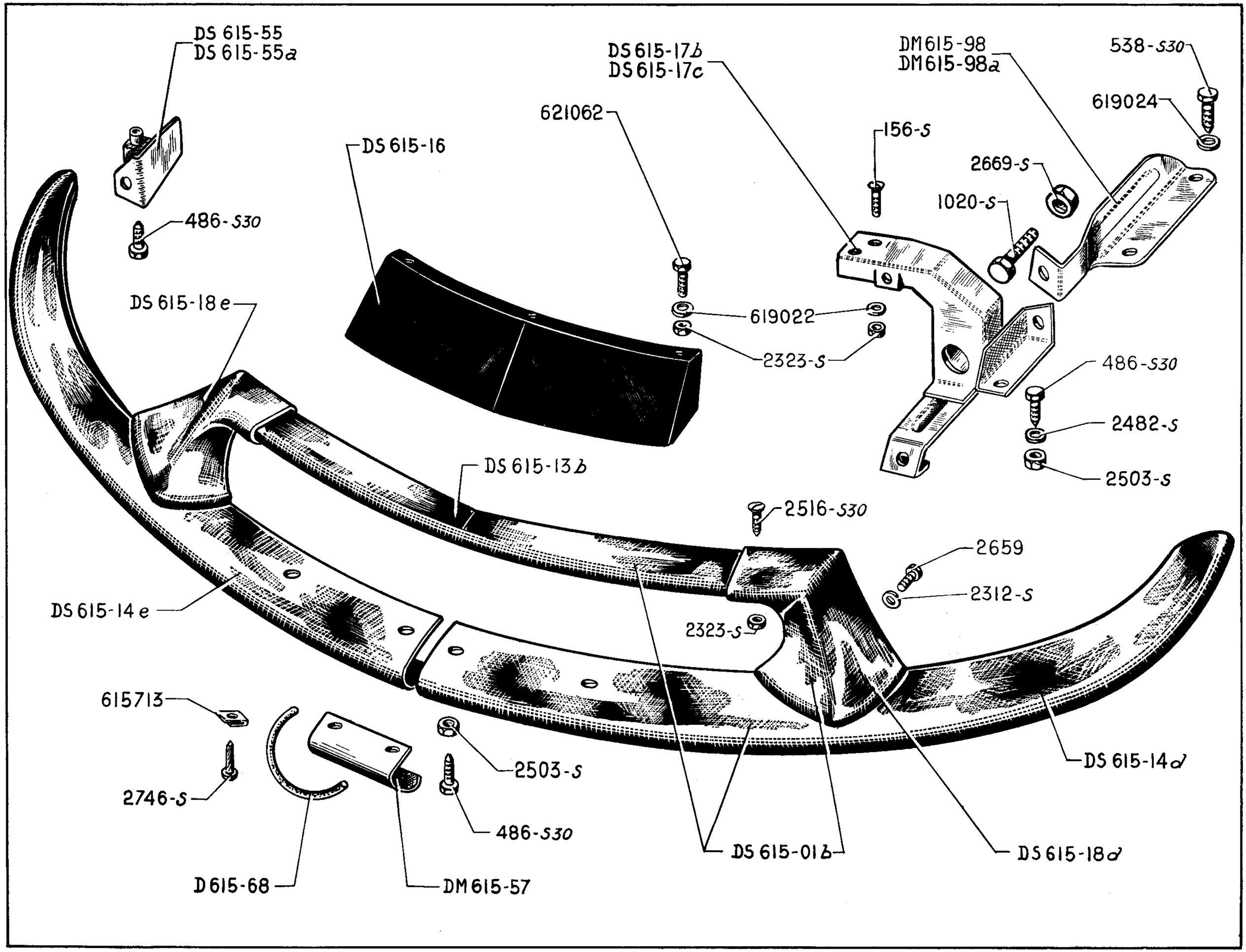
DS 615-55
DS 615-55a
486-S30
DS 615-18e
DS 615-16
621062
DS 615-17b
DS 615-17c
DM615-98
DM615-98a
538-S30
619024
156-S
2669-S
1020-S
619022
2323-S
486-S30
2482-S
2503-S
DS 615-13b
2516-S30
2659
2312-S
DS 615-14e
2323-S
615713
2746-S
2503-S
486-S30
D615-68
DM615-57
DS 615-01b
DS 615-18d
DS 615-14d

NUMBER	DESCRIPTION	No. OFF
	November 1961 - September 1962	
DS 615-01b	Bumper, front complete.	1
DS 615-13b	Bumper, upper without end piece.	1
DS 615-14d	Half bumper, lower, left hand.	1
DS 615-14e	Half bumper, lower, right hand.	1
D 615-16	Registration number plate.	1
DS 615-17b	Support, movable, left hand.	1
DS 615-17c	Support, movable, right hand.	1
DS 615-18d	End piece, left hand (R. VI).	1
DS 615-18e	End piece, right hand (R. VI).	1
DS 615-55	Support plate, securing extreme left hand of bumpers.	1
DS 615-55a	Support plate, securing extreme right hand of bumpers.	1
DM 615-57	Reinforcement assembly for lower half bumpers.	1
D 615-68	Rubber packing for lower half bumper.	1

NUMBER	DESCRIPTION	No. OFF
DM 615-98	Support, left hand without pivot on body.	1
DM 615-98a	Support, right hand without pivot on body.	1
156-S	Screw, raised head 5 diameter 17.5 long securing upper bumpers on movable support (R. III).	4
486-S 30	Screw, hex. head pointed 7 diameter 22.5 long (R. III) assembling:	
	- lower half bumpers.	2
	- lower half bumpers on movable support.	4
	- for support plate at extreme left and right hand.	4
538-S 30	Screw, hex. head pointed, 9 diameter 22 long securing bumpers on caisson (R. III).	4
1.020-S	Screw, hex. head 12 diameter 22 long securing supports on body on bumper supports (R. III).	2
2.312-S	Washer, plain 5.5 x 9 for screws securing end piece (R. III).	4
2.323-S	Nut, hex. 5 diameter 75 pitch (R. III) for screws securing:	
	- end piece on upper bumper.	2
	- upper bumper and registration number plate.	3
	- upper bumper on movable support.	4
2.482-S	Washer, plain 7.5 x 14 for nuts securing lower bumper on movable support (R. III).	4

NUMBER	DESCRIPTION	No. OFF
2.503-S	Nut, hex. 7 diameter x 100 pitch (R.III) for screws:	
	- assembling lower half bumpers.	2
	- securing lower half bumpers on movable support.	4
2.516-S 30	Screw, raised head countersunk, cruciform slot, 5 diameter 16 long securing end piece on upper bumpers (R. VI).	2
2.659	Screw, hex. head 5 diameter 13 long securing end piece (R. III).	4
2.669-S	Nut, hex. 12 diameter 175 pitch for screws securing supports on body on bumper supports (R. III).	2
2.746-S	Screw, round head P.K. cruciform slot 4.85 x 16 securing distance piece on lower bumpers (R. VI).	4
615.713	Nut clips for 4.85 diameter screws, securing distance piece on lower bumper (R. VI).	4
619.022	Washer, plain 5.5 x 14 x 1 (R. III) for screws securing:	
	- upper bumper and registration number plate.	3
	- upper number on movable support.	4
619.024	Washer, plain 10 x 20 for screw securing bumper on caisson (R. II).	4
621.062	Screw hex. head 5 diameter 14 long securing upper bumper and registration number plate (R. III).	3

NUMBER	DESCRIPTION	No. OFF
	Since September 1962	
DS 615-01c	Bumper, front complete.	1
DS 615-13c	Bumper, upper without end piece.	1
DS 615-14j	Half bumper, lower, left hand.	1
DS 615-14k	Half bumper, lower, right hand.	1
DS 615-16	Registration number plate.	1
DS 615-17d	Support, movable, left hand.	1
DS 615-17e	Support, movable, right hand.	1
DS 615-18f	End piece, left hand.	1
DS 615-18g	End piece, right hand.	1
DS 615-47	Stop, rubber, left hand (R. VI).	1

NUMBER	DESCRIPTION	No. OFF
DS 615-47a	Stop, rubber, right hand (R. VI).	1
DS 615-48	Stop, rubber, central (R. VI).	1
DS 615-49	Cover joint for lower half bumpers (R. VI).	1
DS 615-56b	Support, plate, securing extreme left hand of bumpers.	1
DS 615-56c	Support plate, securing extreme right hand of bumpers.	1
DS 615-57	Reinforcement assembly for lower half bumpers.	1
DS 615-65b	Plate securing end piece on bumpers, left hand.	1
DS 615-65c	Plate securing end piece on bumpers, right hand.	1
DS 615-82	Packing (aluminium) 4 mm thick for lateral adjustment of bumpers.	2

NUMBER	DESCRIPTION	No. OFF
2.323-S	Nut, hex. 5 diameter 75 pitch (R. III) for screws securing:-	
	- cover joint	3
	- registration number plate	6
2.482-S	Washer, plain 7.5 x 14 for screws securing end piece (R. III).	6
2.503-S	Nut, hex. 7 diameter 100 pitch for screws securing end piece (R. III).	6
2.746-S	Screw, P.K. 4.85 x 16 securing registration number plate, lower part (R. VI).	4
619.133	Washer, plain for screws assembling and securing bumpers (R. IV).	24
621.072	Screw, hex. head 5 diameter 16 long (R. III) securing:	1
	- reinforcement on half bumpers.	1
	- bumpers, upper part.	4
	- registration number plate, upper part.	5
	- end piece on bumpers	2

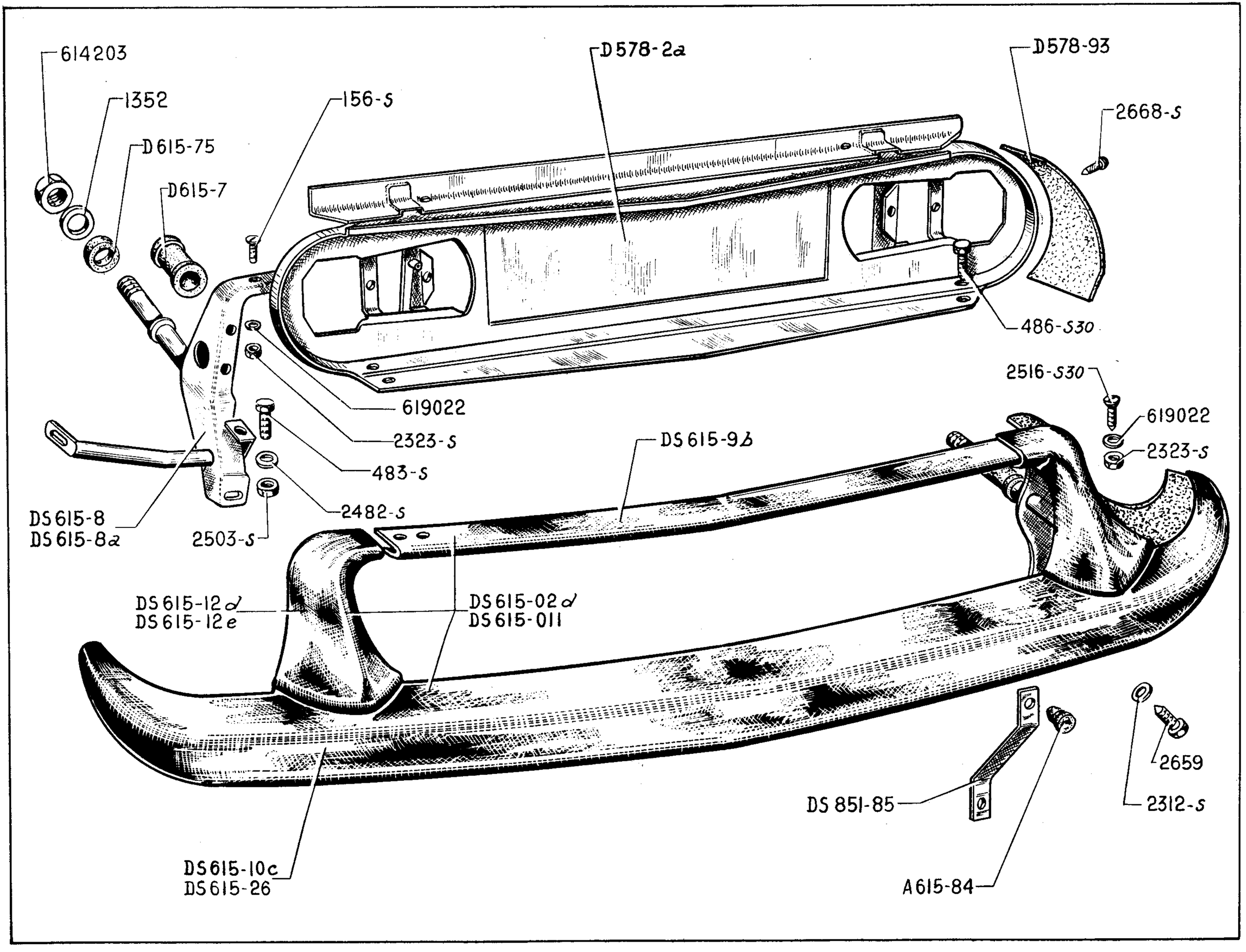
614203
1352
D615-75
D615-7
156-S
D578-2a
D578-93
2668-S
486-S30
619022
2323-S
483-S
2482-S
2503-S
DS615-8
DS615-8a
2516-S30
619022
2323-S
DS615-9b
DS615-12d
DS615-12e
DS615-02d
DS615-011
DS851-85
2659
2312-S
DS615-10c
DS615-26
A615-84

NUMBER	DESCRIPTION	No. OFF
	Since November 1961	
A 615-84	Rubber buffer for rear wing on rear bumper.	2
	———————	
D 578-2a	Registration number plate.	1
D 578-93	Rubber lining between bumper and registration number plate.	2
DS 615-02d	Bumper, rear complete. BERLINE. Until September 1962.	1
DS 615-02f	Bumper, rear, complete. BERLINE. Since September 1962.	1
DS 615-011	Bumper, rear, complete. CABRIOLET. Until September 1962.	1
DS 615-011a	Bumper, rear, complete. CABRIOLET. Since September 1962.	1
D 615-7	Rubber sleeve for movable support.	2
DS 615-8	Movable support, left hand.	1
DS 615-8a	Movable support, right hand.	1
DS 615-9b	Bumper, upper.	1

NUMBER	DESCRIPTION	No. OFF
DS 615-10c	Bumper, lower, BERLINE. Until September 1962.	1
DS 615-10d	Bumper, lower, BERLINE. Since September 1962.	1
DS 615-12d	End piece, left hand (R. VI).	1
DS 615-12e	End piece, right hand (R. VI).	1
DS 615-22	Stop, rubber, lateral, rear (R. VI). Since September 1962.	1
DS 615-26	Bumper, lower. CABRIOLET. Until September 1962.	1
DS 615-26a	Bumper, lower, CABRIOLET. Since September 1962.	1
D 615-75	Washer, rubber, anti-rattle 20 x 30 x 6 on fixed support.	2
DS 851-85	Plate securing rubber buffer for rear wing on rear bumper.	2
156-S	Screw, round head 5 diameter 17.5 long securing upper bumper on movable support (R. III).	4
483-S	Screw, hex. head 7 diameter 15 long securing lower bumper on movable support (R. III).	2
486-S 30	Screw, hex. head pointed 7 diameter 22.5 long securing registration number plate on panel (R. III).	4

NUMBER	DESCRIPTION	No. OFF
1.352	Washer 20.5 x 30 x 1.5 locking fixed support (R. I).	2
2.312-S	Washer, plain 5.5 x 9 for screws securing end piece (R. III).	4
2.323-S	Nut, hex. 5 diameter 75 pitch (R. III) for screws securing:	
	- end piece on upper bumper	2
	- upper bumper on movable support.	4
2.482-S	Washer, plain 7.5 x 14 for nut securing lower rear bumper (R. III).	6
2.503-S	Nut, hex. 7 diameter 100 pitch for screws securing lower rear bumper (R. III).	6
2.516-S 30	Screw raised head countersunk, cruciform slot securing end piece on upper bumper (R. VI).	2
2.659	Screw, hex. head 5 diameter 13 long securing end piece on support (R. III).	4
2.668-S	Screw, round head P.K. 3.5 x 10 securing finishing lining (R. VI).	2
614.203	Nut, hex. 20 diameter 200 pitch locking fixed support (R. III).	2
619.022	Washer, plain 5.5 x 14 x 1 for screws securing upper bumper on movable support (R. III).	4

The numbers underlined indicate new parts and do not appear on the illustrations.

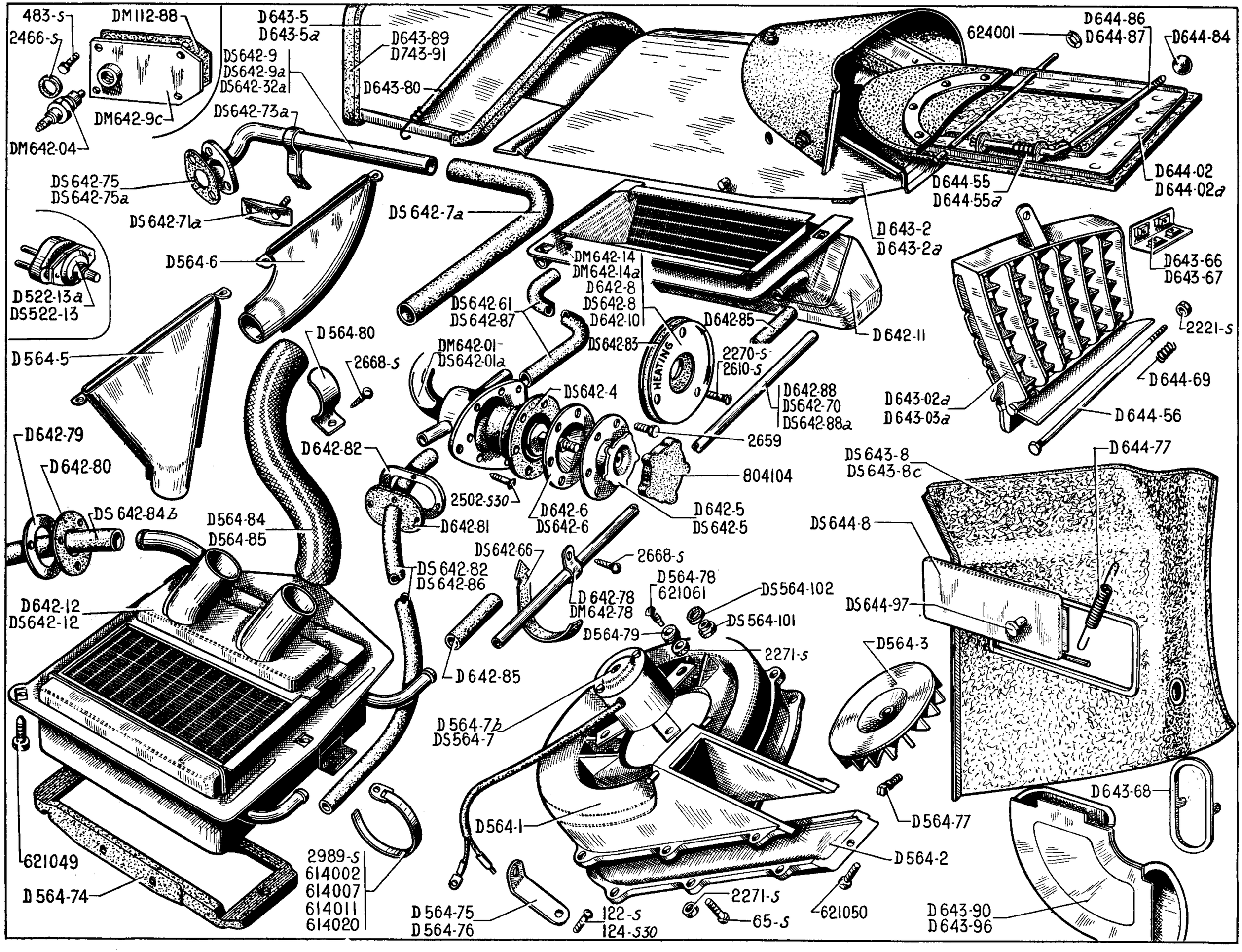
483-S
2466-S
DM112-88
DM642-9c
DM642-04
D643-5
D643-5a
D643-89
D743-91
DS642-9
DS642-9a
DS642-32a
D643-80
DS642-73a
624001
D644-86
D644-87
D644-84
D644-02
D644-02a
D644-55
D644-55a
DS642-75
DS642-75a
DS642-71a
DS642-7a
D643-2
D643-2a
D564-6
D522-13a
DS522-13
DM642-14
DM642-14a
D642-8
DS642-8
D642-10
DS642-61
DS642-87
D642-85
D642-11
D643-66
D643-67
2221-S
D564-80
2668-S
DM642-01
DS642-01a
DS642-83
HEATING
2270-S
2610-S
D564-5
DS642-4
D642-88
DS642-70
DS642-88a
D643-02a
D643-03a
D644-69
D644-56
D642-79
D642-80
D642-82
2659
804104
D644-77
DS643-8
DS643-8c
2502-S30
D642-6
DS642-6
D642-5
DS642-5
DS 642-84b
D564-84
D564-85
D642-81
DS644-8
DS642-66
2668-S
DS 642-82
DS642-86
D564-78
621061
DS564-102
D642-78
DM642-78
DS644-97
DS564-101
D564-79
2271-S
D642-12
DS642-12
D642-85
D564-3
D564-7b
DS564-7
D564-1
D564-77
D643-68
D564-2
621049
2989-S
614002
614007
614011
614020
D564-74
D564-75
D564-76
122-S
124-S30
2271-S
65-S
621050
D643-90
D643-96

NUMBER	DESCRIPTION	No. OFF
	DEMISTING **Until August 1961**	
D 522-13a	Switch 6 volts on instrument board (R.VI). Until September 1960.	1
DS 522-13	Switch 12 volts (R.VI). PRESTIGE Since June 1959 U.S.A. Since December 1959 All types Since September 1960	1
D 564-1	Housing for fan (R.VI).	1
D 564-2	Cover for fan housing (R.VI).	1
D 564-3	Fan (R.VI).	1
D 564-5	Nozzle for distributing hot air, left hand.	1
D 564-6	Nozzle for distributing hot air, right hand.	1
D 564-7b	Motor 6 volts for demister (R.VI) Until September 1960.	1
DS 564-7	Motor 12 volts for demister (R.VI) PRESTIGE Since June 1959 U.S.A. Since December 1959 All types Since September 1960	1
D 564-74	Joint, rubber between radiator and demister motor	1
D 564-75	Plate, short for lower fixing of demister motor on housing 28 mm. long	1
D 564-76	Plate, long for lower fixing of demister motor on dashframe 81 mm long	1
D 564-77	Screw, square head 4 diameter 12 long securing fan	1
D 564-78	Screw, round head 4 diameter 12.5 long, machined part 5.5 diameter securing motor on housing Until December 1958.	3

NUMBER	DESCRIPTION	No. OFF
D 564-79	Bush, rubber 6 x 13 x 6.5 securing motor on housing. Until December 1958.	3
D 564-80	Plate securing flexible duct, right hand.	1
D 564-84	Flexible duct 45 x 51 x 94 connecting nozzle, left hand to radiator (R.VI).	1
D 564-85	Flexible duct 45 x 51 x 500 connecting nozzle, right hand to radiator (R.VI).	1
DS 564-101	Washer, fibre 4.3 x 10 x 13 x 4.5 shouldered for lower fixing of motor on casing (R.VI). Since December 1958.	3
DS 564-102	Washer, fibre 10.2 x 16 x 3 for upper fixing of motor on casing (R.VI). Since December 1958.	3
65-S	Screw, round head 4 diameter 15 long securing fan housing cover (R.III).	7
122-S	Screw, round head 5 diameter 7.5 long for lower fixing of demister (R.III).	1
124-S 30	Screw, round head 5 diameter 12.5 long pointed securing lower clip on dashboard (R.III).	1
2.271-S	Nut, hex. 4 diameter 75 pitch (R.III). - for screws securing fan cover - for screws securing motor on casing	 7 3
2.668-S	Screw, P.K. round-head 3.5 x 10 securing flexible duct, right hand (R.VI).	1
621.050	Screw, hex. head pointed, 5 diameter 20 long securing demister on radiator (R.IV).	1
621.061	Screw, hex. head 4 diameter 16 long (7 mm on flats) securing motor on casing (R.III). Since December 1958.	3

NUMBER	DESCRIPTION	No. OFF
	HEATING **VENTILATION**	
DS 642-01a	Shut off valve for heating, junction tube 14 mm. diameter (R.VI). Replaces earlier types, order in addition 1-DS 642-86, 1-DS 642-87.	1
D 642-11	Radiator for heating and demisting, right hand (R.VI).	1
D 642-12	Radiator for heating and demisting, left hand (R.VI).	1
DS 642-4	Diaphragm, rubber for shut-off valve (R.VI).	1
D 642-5	*Bracket for knob operating shut-off valve (R. VI). Until July 1956. Replaced by DS 642-5, order in addition 1-DS 642-6.*	1
DS 642-5	Bracket for knob operating shut-off valve (R.VI). Since July 1956.	1
D 642-6	*Screw for shut-off valve (R. VI). Until July 1956. Replaced by DS 642-6, order in addition, 1-DS 642-5.*	1
DS 642-6	Screw for shut-off valve (R.VI). Since July 1956.	1
DS 642-7a	Rubber elbow tube 21.5 x 30 for hot water outlet pipe.	1
D 642-8	Indicator plate for heater operation. Until July 1956.	1
DS 642-8	Indicator plate for heater operation Since July 1956.	1
DS 642-9	Pipe 20 x 22 with flange for water outlet. Until September 1960.	1
DS 642-9a	Inlet pipe for heater with support for filter. Since September 1960.	1
D 642-10	Indicator for heater operation. (inscription in English) (R.VI). U.S.A.	1

NUMBER	DESCRIPTION	No. OFF
DS 642-32a	Inlet pipe for heater without support for air filter. EXPORT. Since January 1961.	1
DS 642-66	Rubber collar for flexible water return pipe 195 mm long.	1
DS 642-71a	Plate with welded screw for hot water outlet pipe support.	1
DS 642-73a	Support for hot water outlet pipe.	1
DS 642-75	Joint, oval, for flange of water outlet pipe, fixing by 2 holes 5.5 diameter, 38 mm between centres. (R. VI). Until September 1960.	1
DS 642-75a	Joint for flange of heater inlet pipe (R. VI). Until September 1960.	1
D 642-78	Clip for central water return pipe. Until April 1961.	1
DM 642-78	Clip for central rubber water return pipe. Since April 1961.	2
D 642-79	Backplate, round securing sealing washer on dashframe.	1
D 642-80	Sealing washer, round, on dashframe for water return pipe.	1
D 642-81	Sealing plate, rubber on engine housing panel.	2
D 642-82	Backplate, oval securing sealing plate.	2
DS 642-83	Joint, rubber 15 x 95 x 2 sealing heater control. Since July 1956.	1
DS 642-84b	Rubber pipe, elbowed 19.5 x 26 for water return connecting left hand radiator towards pump, non-developed length 360 mm.	1

NUMBER	DESCRIPTION	No. OFF
D 642-85	Pipe rubber 14 x 20 x 80 for water return, connecting central water return pipe and right hand radiator.	2
DS 642-86	Pipe, rubber 13.5 x 20 x 404 between outlet pipe from shut-off valve and left hand radiator.	1
DS 642-87	Pipe, rubber 13.5 x 20, non-developed length 581 mm between shut-off valve pipe and right hand radiator.	1
D 642-88	*Central metal water return pipe 13 × 15 between left-hand and right-hand radiators, non-developed length 806 mm. Until April 1961. Replaced by DS 642-88a, order in addition 2-DM 642-78 (R. VI).*	1
DS 642-88a	Central rubber water return pipe between left hand and right hand radiators, 950 mm long. Since April 1961.	1
D 643-02a	Ventilation grille with deflector on dashboard, left hand.	1
D 643-03a	Ventilation grille with deflector on dashboard, right hand.	1
D 643-2	Duct complete, for heating and ventilation, left hand.	1
D 643-2a	Duct complete, for heating and ventilation, right hand.	1
D 643-5	Air duct connection between front wing and heater duct, left hand.	1
D 643-5a	Air duct connection between front wing and heater duct, right hand.	1
DS 643-8	Lower heating duct, right hand with deflecting shutter with central knob.	1
D 643-66	Plate securing ventilation, right hand.	1
D 643-67	Plate securing ventilation, left hand.	1

NUMBER	DESCRIPTION	No. OFF
D 643-68	Oval embellishing frame for lower heating duct, right hand.	1
D 643-80	Rubber tensioning strap securing air ducts, 500 mm long.	2
D 643-89	Sealing strip between heater ducts, ventilation and upper dashframe 590 mm long (R. VI).	As nec.
D 643-90	Duct for hot air, elbowed to interior of right hand sidemember.	1
D 643-96	Duct for hot air (straight) to interior of right hand sidemember, length 890 mm.	1
D 644-02	Ventilation shutter with control lever, left hand.	1
D 644-02a	Ventilation shutter with control lever, right hand.	1
DS 644-8	Shutter with central knob for lower heating deflection, right hand. Since November 1957.	1
D 644-55	Return spring, left hand for ventilation shutter lever.	1
D 644-55a	Return spring, right hand for ventilation shutter lever.	1
D 644-56	Hinge pin 3 x 149 for ventilation grille deflector.	2
D 644-69	Spring for hinge pin for ventilation grille deflector.	2
D 644-77	Return spring for lever operating deflector shutter for heating, lower right hand.	1
D 644-84	Knob for lever controlling heating and ventilation (R. VI).	4
D 644-86	Lever, right hand controlling ventilation shutter.	1
D 644-87	Lever, left hand controlling ventilation shutter.	1
DS 644-97	Knob for lower heating deflector, right hand, central fixing (R. VI). Since November 1957.	1

NUMBER	DESCRIPTION	No. OFF
D 743-91	Sealing rubber for connection between air duct and front wing, length 950 mm. (R. VI).	As nec.
2.221-S	Nut, hex. 3 x 60 for pivot pin for deflector on grille (R. III).	2
2.502-S 30	Screw, round head, cruciform slot, 5 diameter 12 long securing shut-off valve (R. VI).	2
2.610-S	Screw, raised head countersunk, cruciform slot, securing indicator plate (R. VI).	3
2.659	Screw, hex. head 5 diameter 13 long for assembling shut-off valve (R. III).	4
2.668-S	Screw, round head 3.5 diameter 10 long securing fixing plate (R. VI).	11
614.002	Clip securing pipes, length 220 mm. (R. VI).	2
614.007	Clip securing pipes, length 190 mm. (R. VI).	8
614.011	Clip, 240 mm. long (R. VI).	1
621.049	Screw, hex. head pointed, 5 diameter 30 long (slot on head) securing heating and demisting radiator and heating and ventilation duct (R. III).	6
624.001	Stop washer for ventilation shutter lever (R. VI).	2
804.104	Knob, rubber for operating shut-off valve (R. VI).	1
	FRONT HEATING COLD CLIMATES SPECIAL PARTS	
DM 642-01	Shut-off valve controlling heating (R. VI).	1

NUMBER	DESCRIPTION	No. OFF
DM 642-04	Temperature gauge bulb unit (R. VI).	1
DM 642-9c	Plate on cylinder head for temperature gauge bulb unit with welded nut.	1
DS 642-12	Radiator for heating and demisting, left hand (R. VI).	1
DM 642-14	Indicator plate for heater adjustment (R. VI). Europe.	1
DM 642-14a	Indicator plate for heater adjustment (R. VI). U. S. A.	1
DS 642-61	Pipe, rubber 13.5 x 22 for right hand heating radiator return and feed to rear group, length 2.185 m.	1
DS 642-70	Pipe rubber 13.5 x 22 for left hand heating radiator return and feed to right hand heating radiator, length 1.145 m.	1
DS 642-82	Pipe, rubber 13.5 x 22 connecting shut-off valve to heating radiator, length 330 mm.	1
DS 643-8c	Duct, lower for heating, right hand with deflection shutter.	1
2.270-S	Screw, raised head countersunk 4 x 14 securing heater indicator plate (R. VI).	3
2.989-S	Clip securing flexible water outlet pipe on shut-off valve, length 245 mm. (R. VI).	1
614.020	Clip, ligarex (R. VI) for screw securing:	
	- flexible pipe on heater inlet pipe	1
	- for rubber pipes on radiator	4

NUMBER	DESCRIPTION	No. OFF
	REAR VENTILATION BERLINE WITH PARTITION PRESTIGE	
D 64-2	Ducellier apparatus 6 volts complete (R. VI).	1
D 643-135	Ventilation nozzle, rear (R. VI).	2
D 642-18	Casing for motor (R. VI).	1
D 643-112	Clip securing ducts (R. VI).	As nec.
D 643-113	Clip securing ducts (R. VI).	As nec.
D 643-115	Duct, connecting motor and union (R. VI).	1
D 643-137	Duct, connecting nozzle (R. VI).	1
D 643-139	Duct, left hand (R. VI).	1
D 643-139a	Duct, right hand (R. VI).	1
D 64-1	Motor 12 volts (R. VI).	1
D 64-1a	Motor 6 volts (R. VI).	1
D 643-149	Protector for piping, left hand (R. VI).	1
D 643-138	Forked connection (R. VI).	1
D 642-17	Resistance for motor 12 volts (R. VI).	1
D 642-17a	Resistance for motor 6 volts (R. VI).	1
D 642-52	Support for motor (R. VI).	1
D 644-93	Cover for ventilation air inlet (R. VI).	1

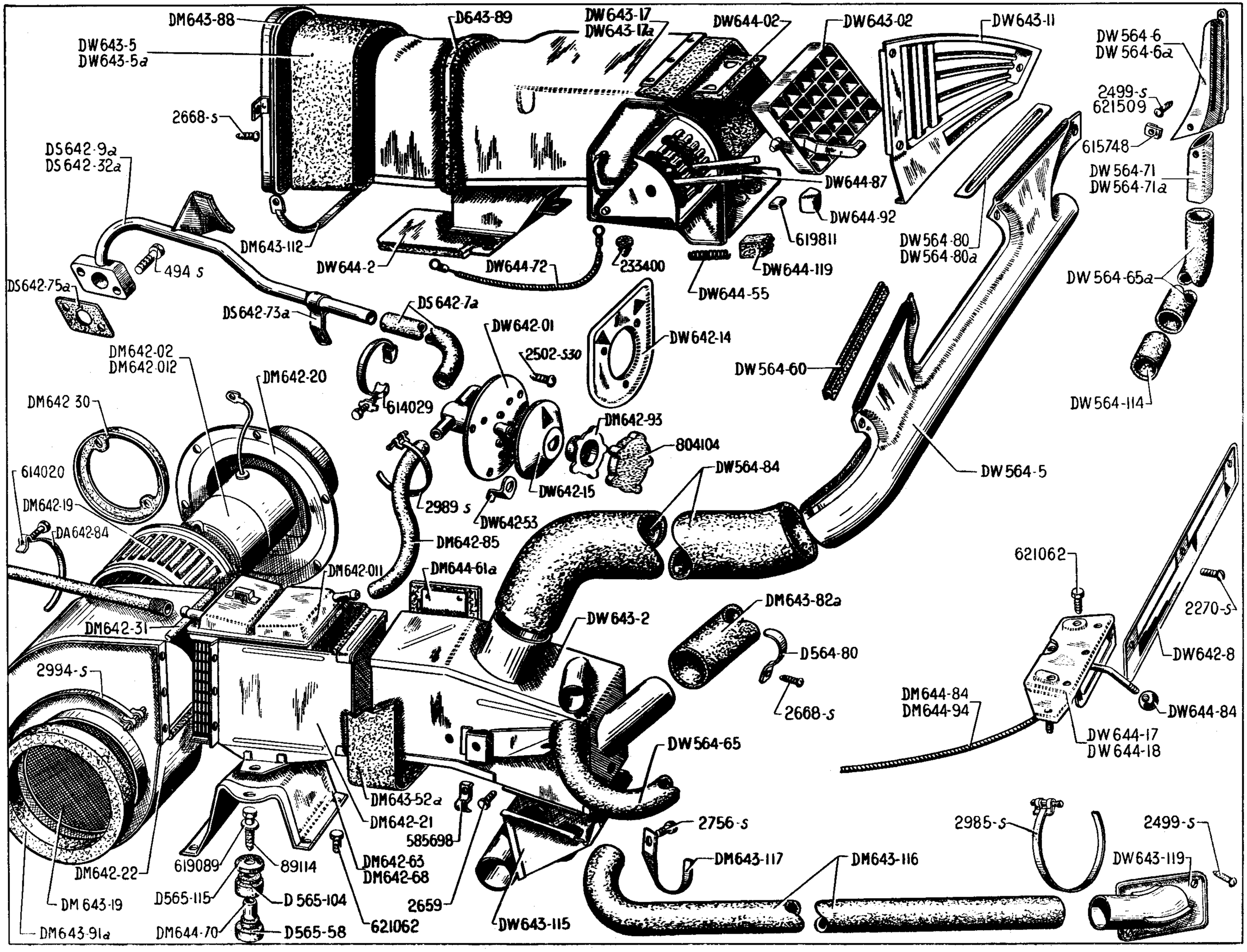
DM643-88
DW643-5
DW643-5a
D643-89
DW643-17
DW643-17a
DW644-02
DW643-02
DW643-11
DW564-6
DW564-6a
2499-s
621509
615748
DW564-71
DW564-71a
2668-s
DS642-9a
DS642-32a
DW644-87
DW644-92
619811
DW564-80
DW564-80a
DM643-112
DW644-2
DW644-72
233400
DW644-119
DW644-55
494 s
DS642-75a
DS642-73a
DS642-7a
DW642-01
DW642-14
DW564-65a
2502-s30
DM642-02
DM642-012
DM642-20
DW564-60
614029
DW564-114
DM642 30
DM642-93
804104
DW564-84
DW564-5
614020
DW642-15
DM642-19
2989 s
DW642-53
DA642-84
DM642-85
621062
DM642-011
DM644-61a
DM643-82a
2270-s
DW643-2
DM642-31
D564-80
DW642-8
2994-s
2668-s
DM644-84
DM644-94
DW644-84
DW644-17
DW644-18
DW564-65
DM643-52a
DM642-21
585698
2756-s
2985-s
2499-s
DM642-22
619089
89114
DM642-63
DM642-68
DM643-117
DM643-116
DW643-119
DM 643-19
D565-115
D 565-104
2659
DM643-91a
DM644-70
D565-58
621062
DW643-115

NUMBER	DESCRIPTION	No. OFF
	August 1961 - September 1962 **DEMISTING**	
DW 564-5	Nozzle for demisting windscreen (R. VI).	1
DW 564-6	Nozzle for demisting front door glass, left hand (R. VI).	1
DW 564-6a	Nozzle for demisting front door glass, right hand (R. VI).	1
DW 564-60	Sealing strip between demister nozzle and dashboard, length 185 mm.	2
DW 564-65	Flexible pipe 20 x 33.5 x 380 for lateral demisting nozzle, left hand (R. VI).	1
DW 564-65a	Flexible pipe 20 x 33.5 x 730 for lateral, demisting nozzle, right hand (R. VI).	1
DW 564-71	Union for lateral demisting nozzle, left hand (R. VI).	1
DW 564-71a	Union for lateral demisting nozzle, right hand (R. VI).	1
DW 564-80	Finisher for demisting nozzle on dashboard, left hand, length 220 mm.	1
DW 564-80a	Finisher for demisting nozzle on dashboard; right hand, length 215 mm.	1
DW 564-84	Flexible duct for connection between separation duct and windscreen nozzle, 75 mm. diameter 88 mm. long (R. VI).	1
DW 564-114	Union 31 x 33 x 45 for flexible pipe for right hand lateral demisting to demister nozzle.	1
2.499-S	Screw P.K. round head 3.5 x 9.5 securing demister nozzle to lateral glass (R. VI).	2
615.748	Nut clip for 3.5 screw assembling demister nozzle with union (R. VI).	2
621.509	Screw, raised head countersunk (cruciform slot) assembling demister nozzle with union (R. VI).	2

NUMBER	DESCRIPTION	No. OFF
	HEATING **VENTILATION**	
D 564-80	Plate securing flexible duct for front heating, right hand, on engine housing panel.	3
D 565-58	Bush, rubber 12 x 20 x 17 x 6 for screws securing heater group (R. VI).	3
D 565-104	Bush, rubber 8 x 20 x 8 for screws securing heater group.	3
D 565-115	Cup washer for bush securing heater group (R. VI).	1
DW 642-01	Shut-off valve controlling heating without knob (R. VI).	1
DW 642-011	Radiator for heating (R. VI).	1
DW 642-012	Motor 12 volts (R. VI).	1
DS 642-7a	*Flexible rubber pipe elbowed 21·5 × 30 for hot water outlet pipe. Replaced by DM 642-96.*	1
DW 642-8	Indicator plate controlling ventilation, demisting and heating (R. VI).	1
DS 642-9a	Heater inlet pipe with support for filter	1
DW 642-14	Indicator plate controlling heating (R. VI).	1
DW 642-15	Disc with opening mark for heater shut-off valve (R. VI).	1
DM 642-19	Impeller (R. VI).	1
DM 642-20	Support for motor (R. VI).	1
DM 642-21	Support box for radiator (R. VI).	1
DM 642-22	Volute for impeller (R. VI).	1
DM 642-30	Thrust plate for motor (R. VI).	1
DM 642-31	Joint, rubber between casing and volute (R. VI).	1
DS 642-32a	Inlet pipe for heater without support for air filter. EXPORT	1
DW 642-53	Guide stop for shut-off valve (R. VI).	1
DM 642-63	Support, front for heater group	1

NUMBER	DESCRIPTION	No. OFF
DM 642-68	Support, lower for heater group	1
DS 642-73a	Support for water outlet pipe	1
DS 642-75a	Joint for heater pipe flange (R. VI).	1
DA 642-84	Flexible pipe for water return. Except cold climates.	1
DM 642-85	Feed pipe, rubber connecting shut-off valve to radiator of heater group.	1
DM 642-93	Body for knobs operating heater shut-off valve (R. VI).	1
DM 642-96	Flexible rubber pipe, elbowed 21.5 x 30 for hot water outlet pipe.	1
DW 643-02	Ventilation grille on ventilation duct (R. VI).	2
DW 643-2	Duct supplying hot air.	1
DW 643-5	Air duct, left hand, connected between front wing and ventilation duct (R. VI).	1
DW 643-11	Ventilation grille, on dashboard, right hand.	1
DW 643-17	Ventilation duct, left hand.	1
DW 643-17a	Ventilation duct, right hand.	1
DW 643-19	Insect grille on heater group (R. VI).	1
DM 643-52a	Flexible duct connecting heater group to supply duct.	1
DM 643-82a	Flexible duct for front heating, right hand, length 1150 mm. (R. VI).	1
DM 643-88	Insect grille on front wing, right and left hand.	2
D 643-89	Sealing strip between supply duct and dashframe, upper part, 590 mm. long (R. VI).	As nec.
DM 643-91a	Flexible duct connected between front wing and heater group.	1
DM 643-112	Ligarex clip, securing junction of ducts (R. VI).	4
DW 643-115	Heater inlet for rear seats on supply duct.	1

The numbers underlined indicate new parts and do not appear on the illustrations.

NUMBER	DESCRIPTION	No. OFF
DM 643-116	Flexible duct for heating rear seats 45 mm. diameter length 1.500 m. (R. VI).	1
DM 643-117	Plate retaining heating duct to rear seats.	1
DW 643-119	Plate retaining heating duct.	1
DW 644-02	Ventilation shutter, upper in duct	2
DW 644-2	Ventilation shutter, lower under duct	2
DW 644-17	Control for heating shutter.	1
DW 644-18	Control for heating deflection shutter	1
DW 644-55	Spring 5.5 x 20 for plunger on control lever for ventilation shutters on duct.	4
DM 644-61a	Shutter for heating on front hot air duct.	1
DM 644-70	Distance piece 5.5 x 8 x 10.5 for bush securing heater group.	3
DW 644-72	Cable controlling ventilation shutter, 225 mm. long (R. VI).	2
DM 644-84	Cable controlling heating deflection shutter, 765 mm. long (R. VI).	1
DW 644-84	Knob for levers controlling heating shutters (R. VI).	2
DW 644-87	Lever controlling ventilation shutters on duct.	4
DW 644-92	Knob controlling ventilation on dashboard (R. VI).	4
DM 644-94	Cable controlling heating shutter, 685 mm. long (R. VI).	1
DW 644-119	Plunger for positioning ventilation shutters on duct (R. VI).	4
494-S	Screw, hex. head 7 diameter 42 long securing heater inlet pipe (R. III).	2

NUMBER	DESCRIPTION	No. OFF
2.270-S	Screw, raised head countersunk 4 diameter 14 long securing heater indicator plate (R. VI).	3
2.499-S	Screw, raised head countersunk 3.5 x 9.5 (cruciform slot) securing plate retaining duct (R. VI).	2
2.502-S 30	Screw, round head pointed (cruciform slot) securing shut-off valve on body (R. VI).	3
2.659	Screw, hex. head 5 diameter 13 long securing shutter control cable clip (R. III).	2
2.668-S	Screw, round head 3.5 x 10 (R. VI) securing:	
	- insect grille	4
	- plate for flexible duct	4
2.756-S	Screw, round head 3.5 x 9.5 cruciform slot, securing duct (R. VI).	1
2.985-S	Clip with pin securing heater duct to rear seats 438 mm. long (R. VI).	2
2.989-S	Clip securing outlet and feed pipes on shut-off valve, 245 mm. long (R. VI)	2
2.994-S	Clip securing duct on heater group, 740 mm. long (R. VI).	1
89.114	Screw, hex. head 5 diameter 25 long securing group on radiator support (R. III).	3
233.400	Stop for ventilation shutter (R. VI).	4
585.698	Clip for shutter control cable (R. III).	2
614.020	Ligarex clip with screw (R. VI) securing :	
	- flexible pipe for water return from radiator	1
	- feed pipe on radiator for heater group	1
614.029	Clip securing water outlet pipe (R. VI)	1
619.089	Washer 5.5 x 20 x 1 for screws securing heater group (R. III).	3

NUMBER	DESCRIPTION	No. OFF
619.811	Clip securing knobs for ventilation control levers on dashboard (R. VI).	4
621.062	Screw, hex. head 5 diameter 14 long (R. III).	
	- for radiator support	4
	- for front support of heater group	2
	- for heater inlet	1
	- securing separation duct	2
	- for shutter controls	4
	-for ventilation ducts	2
804.104	Rubber knob for operating heater shut-off valve (R. VI).	1
	REAR VENTILATION BERLINE WITH PARTITION PRESTIGE	
D 643-135	Nozzle for rear ventilation (R. VI).	2
D 643-112	Clip securing ducts (R. VI).	As nec.
D 643-113	Clip securing ducts (R. VI).	As nec.
D 643-115	Duct for junction of motor and union (R. VI).	1
D 643-137	Duct connecting nozzle support (R. VI).	1
D 643-139	Duct, left hand (R. VI).	1
D 643-139a	Duct, right hand (R. VI).	1
D 64-1	Motor (R. VI).	1
D 643-149	Protector for piping, left side (R. VI).	1
D 643-138	Fork union (R. VI).	1
D 642-17	Resistance 12 volts (R. VI).	1
D 642-52	Motor support (R. VI).	1
D 644-93	Cover for air inlet for ventilation (R. VI)	1

NUMBER	DESCRIPTION	No. OFF
	DEMISTING	
DW 564-5	Nozzle for demisting windscreen (R. VI).	1
DW 564-6	Nozzle for demisting front door glass, left hand (R. VI).	1
DW 564-6a	Nozzle for demisting front door glass, right hand (R. VI).	1
DW 564-60	Sealing strip between demister nozzle and dashboard, length 185 mm.	1
DW 564-65	Flexible pipe 20 x 33.5 x 380 for lateral demisting nozzle, left hand (R. VI).	1
DW 564-65a	Flexible pipe 20 x 33.5 x 730 for lateral demisting nozzle, right hand (R. VI).	1
DW 564-71	Union for lateral demisting nozzle, left hand (R. VI).	1
DW 564-71a	Union for lateral demisting nozzle, right hand (R. VI).	1
DW 564-80	Finisher for demisting nozzle on dashboard, left hand, length 220 mm.	1
DW 564-80a	Finisher for demisting nozzle on dashboard, right hand, length 215 mm.	1
DW 564-84	Flexible duct for connection between separation duct and windscreen nozzle, 75 mm. diameter 88 mm. long (R. VI).	1
DW 564-114	Union 31 x 33 x 45 for flexible pipe for right hand lateral demisting to demister nozzle.	1
2.499-S	Screw, P.K. round head 3.5 x 9.5 securing demister nozzle to lateral glass (R. VI).	2
615.748	Nut clip for 3.5 screw assembling demister nozzle with union (R. VI).	2
621.509	Screw, raised head countersunk (cruciform slot) assembling demister nozzle with union (R. VI).	2

NUMBER	DESCRIPTION	No. OFF
	HEATING AND VENTILATION	
D 564-80	Plate securing flexible duct for front heating, right hand, on engine housing panel.	3
D 565-58	Bush, rubber 12 x 20 x 17 x 6 for screws securing rear left hand of heater group on support (R. VI).	1
D 565-104	Bush, rubber 8 x 20 x 8 for front and rear heater group.	4
D 565-115	Cup washer for bush securing rear left hand of heater group (R. VI).	1
DW 642-01a	Shut-off valve controlling heater without knob (R. VI).	1
DS 642-02	Heater and ventilation group DUCELLIER (3216A) (R. VI).	1
DW 642-8	Indicator plate controlling ventilation, demisting and heating (R. VI).	1
DS 642-9a	Heater inlet pipe with support for filter.	1
DW 642-14	Indicator plate controlling heating (R. VI).	1
DW 642-15	Disc with opening mark for heater shut-off valve (R. VI).	1
DS 642-32a	Inlet pipe for heater without support for air filter EXPORT	1
DS 642-48	Support, rear for heater and ventilation group.	1
DM 642-51a	Screw, round head 4 diameter 16.5 long securing body of heater shut-off valve on support.	2
DW 642-53	Guide stop for shut-off valve (R. VI).	1
DS 642-73b	Support for water outlet pipe	1

NUMBER	DESCRIPTION	No. OFF
DS 642-75a	Joint for heater pipe flange (R. VI).	1
DM 642-78	Plate securing feed pipe connecting shut-off valve to radiator of heater group on dashframe (R. VI).	1
DS 642-84d	Flexible pipe for water return 530 mm. long.	1
DM 642-85	Feed pipe, rubber connecting shut-off valve to radiator of heater group.	1
DW 642-93	Body for knob operating heater shut-off valve (R. VI).	1
DS 642-96	Flexible rubber hot water outlet pipe	1
DM 642-100	Washer, rubber insulating shut-off from heater 100 mm. diameter 4 mm. thick (R. VI).	1
DW 643-02	Ventilation grille on ventilation duct (R. VI).	2
DS 643-5	Flexible duct connecting heater group to ventilation duct, left hand.	1
DS 643-6	Duct connecting between feed duct and ventilation, right hand (R. VI).	1
DS 643-10	Duct for hot air supply.	1
DW 643-11	Ventilation grille on dashboard, right hand.	1
DW 643-17	Ventilation duct, left hand.	1
DW 643-17a	Ventilation duct, right hand.	1
DS 643-19	Insect grille on front wing air inlet duct.	2
DS 643-50	Plate forming clip with welded nut securing ventilation duct on right hand front wing.	1
DS 643-52	Flexible duct connecting heater group radiator with separation duct.	1
DS 643-53a	Plate securing supply duct on right hand front wing.	1
DS 643-57	Duct (metal) for air inlet on right and left hand front wing.	2
DM 643-82a	Flexible duct for front heating, right side, 1.150 m. long (R. VI).	1

NUMBER	DESCRIPTION	No. OFF
D 643-89	Sealing strip between separation duct and upper dashframe, 590 mm. long (R. VI).	As nec.
DS 643-103	Flexible duct supplying air for right and left hand ventilation, 840 mm. (R. VI).	2
DW 643-115	Heater inlet for rear seats on separation duct.	1
DM 643-116	Flexible duct for heating rear seats, 45 mm. diameter 1.500 m. long (R. VI).	1
DM 643-117	Plate retaining heater duct for rear seats.	1
DW 643-119	Plate retaining heater duct.	1
DW 644-02	Ventilation shutter, upper in duct.	2
DW 644-2	Ventilation shutter, lower under duct.	1
DW 644-17	Control for heater shutter.	1
DW 644-18	Control for heating deflection shutter	1
DW 644-55	Spring 5.5 x 20 for plunger on lever controlling ventilation shutters on duct.	4
DM 644-61a	Shutter for heating on front hot air separation duct.	1
DM 644-70	Distance piece 5.5 x 8 x 10.5 for bush securing rear left hand of heater group on support.	1
DS 644-70	Distance piece 5.5 x 8 x 16 for screws securing front and rear right hand of heater group (R. VI).	2
DW 644-72	Cable controlling ventilation shutter 225 mm. long (R. VI).	2
DM 644-84	Cable controlling heater deflection shutter, 765 mm. long (R. VI).	1

NUMBER	DESCRIPTION	No. OFF
DW 644-84	Knob for levers controlling heater shutter (R. VI).	2
DW 644-87	Lever controlling ventilation shutters on duct.	4
DW 644-92	Knob for levers controlling ventilation on dashboard (R. VI).	4
DM 644-94	Cable controlling heater shutter 685 mm. long (R. VI).	1
DW 644-119	Plunger for positioning ventilation shutters on duct (R. VI).	4
494-S	Screw, hex. head 7 diameter 42 long securing heater inlet pipe (R. III).	2
2.270-S	Screw, raised head countersunk 4 diameter 14 long securing heater indicator plate (R. VI).	3
2.499-S	Screw, raised head countersunk 3.5 diameter 9.5 long (cruciform slot) securing plate retaining duct (R. VI).	2
2.548-S 30	Screw, round head, pointed 5 diameter 16.5 long (R. VI) securing:	
	- heater shut-off valve	3
	- ventilation ducts	2
2.659	Screw, hex. head 5 diameter 13 long securing shutter control cable clip (R. III).	2
2.668-S	Screw, round head 3.5 diameter 10 long securing plate for heater duct on engine housing panel (R. VI).	4
2.756-S	Screw, round head 3.5 diameter 9.5 long, cruciform slot securing plate for heater duct to rear seats.	1
2.985-S	Clip with pin securing heater duct for rear seats, 438 mm. long (R. VI).	2
2.989-S	Clip securing outlet and feed pipes on shut-off valve, 245 mm. long (R. VI).	2

NUMBER	DESCRIPTION	No. OFF
89.114	Screw, hex. head 5 diameter 25 long securing heater group on support (R. III).	3
233.400	Stop for ventilation shutter (R. VI).	4
585.698	Clip for shutter control cable (R. III).	2
614.029	Clip securing water outlet pipe (R. VI)	1
614.050	Ligarex clip with screw securing air outlet side of ducts and insect grille, 720 mm. long (R. VI).	4
618.745	Rivet securing air inlet duct on wing (R. VI).	8
619.089	Washer, 5.5 x 20 x 1 for screws securing front and rear, right hand of heater group (R. III).	2
621.062	Screw, hex. head 5 diameter 14 long (R. III) securing:	
	- plate for duct on front wing, right hand.	3
	- separation duct	2
	- shutter controls	4
	- ventilation ducts	2
621.072	Screw, hex. head 5 diameter 16 long securing rear support for heater group (R. III).	4
619.811	Clip securing knobs for ventilation control levers on dashboard (R. VI).	4
804.104	Knob, rubber for operating heater shut-off valve (R. IV).	1

REAR VENTILATION
BERLINE WITH PARTITION
PRESTIGE

See page 227.

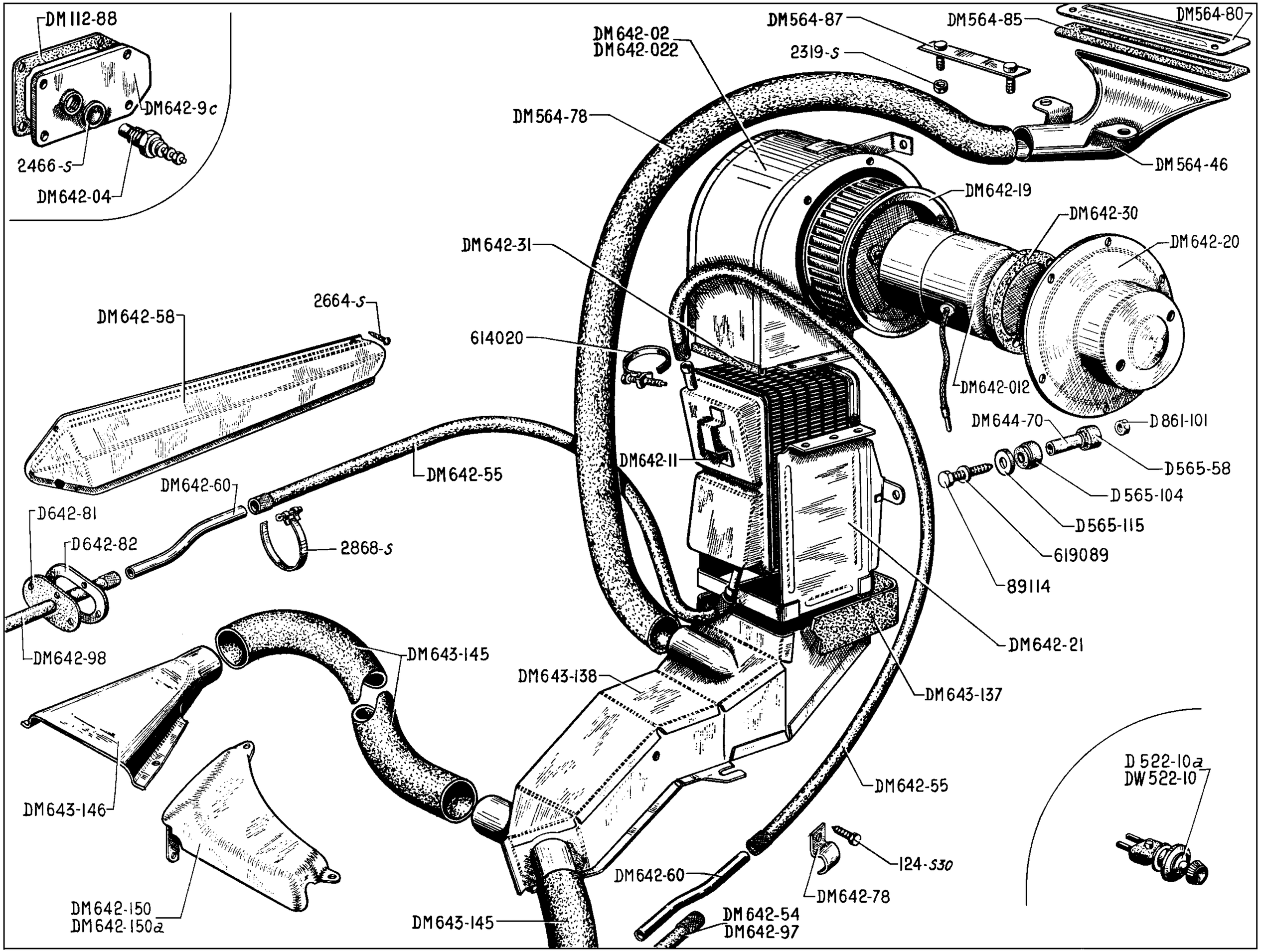
DM112-88
DM642-9c
2466-S
DM642-04
DM564-87
DM564-85
DM564-80
DM642-02
DM642-022
2319-S
DM564-78
DM564-46
DM642-19
DM642-30
DM642-20
DM642-31
2664-S
DM642-58
614020
DM642-012
DM644-70
D861-101
DM642-11
D565-58
DM642-55
DM642-60
D565-104
D565-115
D642-81
D642-82
2868-S
619089
89114
DM642-21
DM642-98
DM643-145
DM643-138
DM643-137
DM643-146
DM642-55
D522-10a
DW522-10
124-S30
DM642-60
DM642-78
DM642-150
DM642-150a
DM643-145
DM642-54
DM642-97

NUMBER	DESCRIPTION	No. OFF
DM 112-88	Joint for closing plate (R. VI).	1
D 522-10a	Switch for rear heater group, on dashboard (R. VI). Until September 1961.	1
DW 522-10	Switch for rear heater group, on dashboard (R. VI). Since August 1961.	1
DM 564-46	Nozzle for rear window demisting (R. VI).	1
DM 564-78	Flexible duct connecting rear separation duct to rear window demisting,nozzle 1.020 mm. long (R. VI).	1
DM 564-80	Finisher for fixing rear window demisting nozzle (R. VI).	1
DM 564-85	Sealing joint, rubber between demister nozzle and rear window shelf 200 mm. long (R. VI).	1
DM 564-87	Reinforcement for rear window demister nozzle fixing, 2 welded screws at 68 mm. between centres (R. VI).	1
D 565-58	Bush, shouldered, rubber 12 x 20 x 17 x 6 for screws securing heater group (R. VI).	3
D 565-104	Bush, rubber 8 x 20 x 8 for screws securing heater group.	3
D 565-115	Washer, cupped, for bush for heater group fixing (R. VI).	3
DM 642-02	Heater group and rear demister group, DUCELLIER (R. VI).	1
DM 642-04	Temperature gauge bulb unit (R. VI).	1
DM 642-011	Radiator for heater group (R. VI).	1
DM 642-012	Motor 12 volts for heater group (R. VI).	1
DM 642-9c	Plate on cylinder head with welded nut for fixing of temperature gauge bulb unit.	1

NUMBER	DESCRIPTION	No. OFF
DM 642-19	Impeller for heater group (R. VI).	1
DM 642-20	Support for heater group motor (R. VI).	1
DM 642-21	Box support for heater radiator (R. VI).	1
DM 642-22	Volute for heater group impeller (R. VI).	1
DM 642-30	Thrust plate for heater group motor (R. VI).	1
DM 642-31	Joint, rubber between box and heater group volute (R. VI).	4
DM 642-54	Pipe, rubber, front 13.5 x 21 for water return from rear heater group 3.040 m. long. Until August 1961.	1
DM 642-55	Pipe, rubber, rear 13.5 x 21 for water return from rear heater group 1.550m. long.	2
DM 642-58	Protector for rubber feed and water return pipes from rear group (R. VI).	2
DM 642-60	Pipe, elbowed 12.5 x 14 connecting feed pipes (R. VI).	2
DM 642-78	Plate securing water return pipe on separation duct and access panel (R. VI).	5
DM 642-97	Pipe, rubber front 13.5 x 21 for water return from rear group, 3.040 m. long. Since August 1961.	1
DM 642-98	Pipe, rubber, front 13.5 x 21 feeding rear heater group, 3.380 m. long.	1
DM 643-137	Duct, rubber between rear heater group and rear separation duct 395 mm. wide.	1
DM 643-138	Separation duct, rear complete for heating and demisting.	1
DM 643-145	Flexible duct for heating to rear seats.	2
DM 643-146	Nozzle for distribution of hot air to rear seats (R. VI).	2

NUMBER	DESCRIPTION	No. OFF
DM 643-150	Protector, left hand for distribution nozzle for hot air to rear seats (R. VI).	1
DM 643-150a	Protector, right hand for distribution nozzle for hot air to rear seats (R. VI).	1
DM 644-70	Distance piece 5.5 x 8 x 10.5 for bush securing heater group.	3
D 861-101	Nut, hex. 5 diameter 75 pitch for screws securing rear group.	3
124-S 30	Screw, round head 5 diameter 12.5 long securing plates retaining rubber pipes on rear separation duct (R. III).	2
185-S	Screw, raised head countersunk 5 diameter 15 long securing finisher for rear demister nozzle (R. III).	2
2.319-S	Nut, hex. 5 diameter 75 pitch (R. III). securing:	
	- demister nozzle on rear shelf	2
	- finisher for nozzle	2
2.466-S	Joint, fibre 18.3 x 24 x 1 for temperature gauge bulb unit (R. VI).	1
2.664-S	Screw, round head P.K. 3.5 x 20 (R. VI). securing:	
	- protectors for rubber pipe on sidemember	8
	- for nozzles and nozzle protectors	10
2.868-S	Clip securing rubber pipes on connecting pipe, 200 mm. long (R. VI).	4
2.985-S	Clip securing duct on rear demisting nozzle 438 mm. long (R. VI).	1
89.114	Screw, hex. head 5 diameter 25 long securing heater group on partition (R. IV).	3
614.020	Ligarex clip with screw, securing rubber pipes on heater group (R. VI).	2
619.089	Washer 5.5 x 20 x 1 for screws securing heater group (R. III).	3

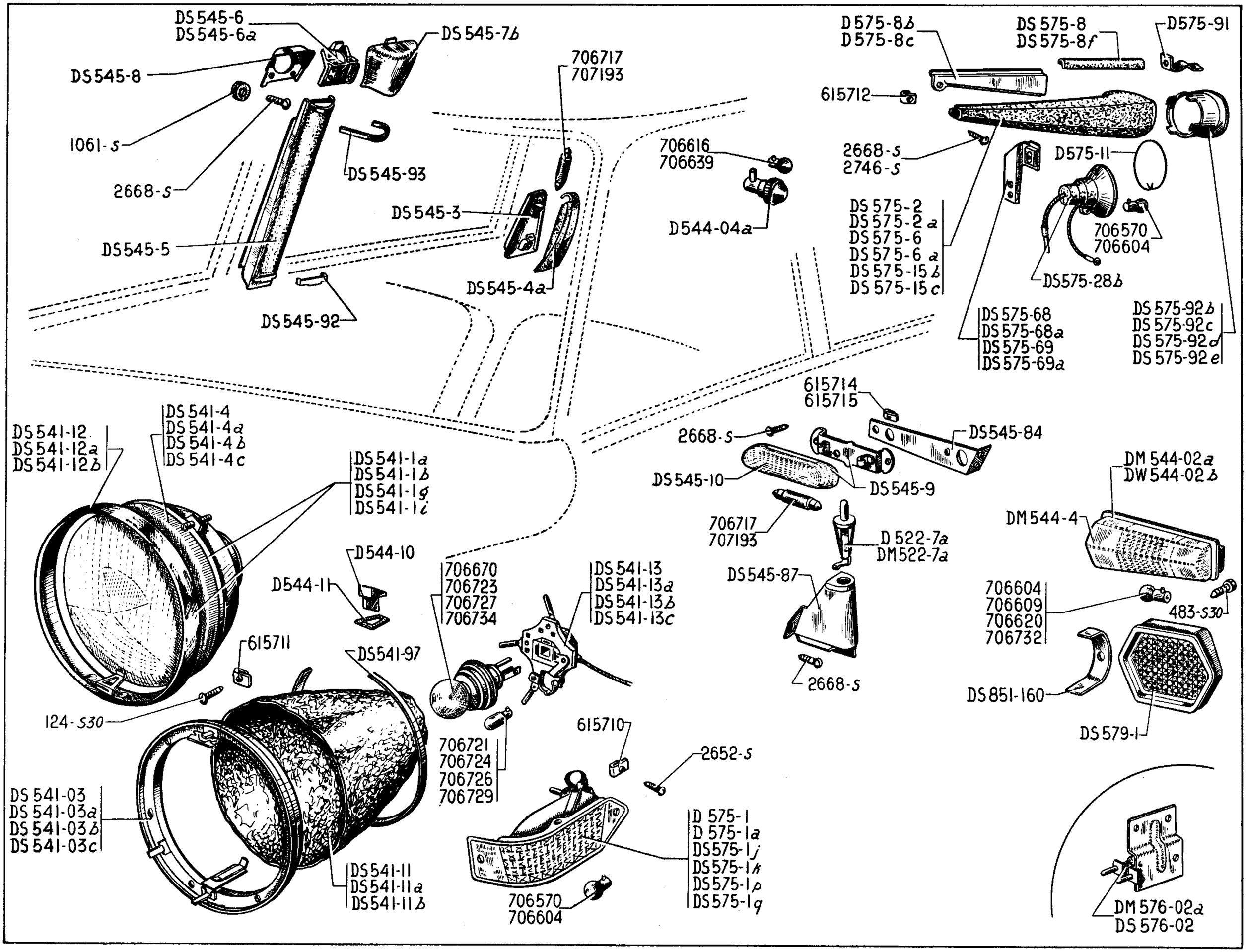
DS545-6
DS545-6a
DS545-7b
DS545-8
1061-s
2668-s
DS545-93
DS545-5
DS545-92
706717
707193
DS545-3
DS545-4a
706616
706639
D544-04a
D575-8b
D575-8c
DS575-8
DS575-8f
D575-91
615712
2668-s
2746-s
D575-11
DS575-2
DS575-2a
DS575-6
DS575-6a
DS575-15b
DS575-15c
706570
706604
DS575-28b
DS575-68
DS575-68a
DS575-69
DS575-69a
DS575-92b
DS575-92c
DS575-92d
DS575-92e
615714
615715
2668-s
DS545-84
DS545-10
DS545-9
706717
707193
D522-7a
DM522-7a
DS545-87
2668-s
DM544-02a
DW544-02b
DM544-4
706604
706609
706620
706732
483-S30
DS851-160
DS579-1
DS541-12
DS541-12a
DS541-12b
DS541-4
DS541-4a
DS541-4b
DS541-4c
DS541-1a
DS541-1b
DS541-1g
DS541-1i
D544-10
D544-11
706670
706723
706727
706734
DS541-13
DS541-13a
DS541-13b
DS541-13c
615711
DS541-97
124-S30
706721
706724
706726
706729
615710
2652-s
DS541-03
DS541-03a
DS541-03b
DS541-03c
DS541-11
DS541-11a
DS541-11b
D575-1
D575-1a
DS575-1j
DS575-1k
DS575-1p
DS575-1q
706570
706604
DM576-02a
DS576-02

Make of Lamp	External Dia. of Headlamp	Shape of Glass	Diameter of Glass	Number of Headlamp	Number of Glass	Number of Rim	REMARKS
CIBIE	226	Convex	183	DS 541-1a	DS 541-4 (optic assembly)	DS 541-12	Until April 1961.
CIBIE	226	Convex	183	DS 541-1g *Replaced by DS 541-1n*	DS 541-4b (*optic assembly*) *Replaced by DS 541-4e*	DS 541-12	European standard. ITALY. All types. April 1961 - May 1962.
CIBIE	226	Convex	183	DS 541-1n	DS 541-4e (optic assembly)	DS 541-12	European standard. May 1962 - September 1962.
CIBIE	226	Convex	183	DS 541-1m	DS 541-4e (optic assembly)	DS 541-12a	European standard. Since September 1962.
MARCHAL	226	Convex	183	DS 541-1b	DS 541-4a	DS 541-12	Until April 1961.
MARCHAL	226	Convex	183	DS 541-1i	DS 541-4c (optic assembly)	DS 541-12b	European standard. April 1961 - September 1962.
MARCHAL	226	Convex	183	DS 541-1k	DS 541-4c (optic assembly)	DS 541-12b	European standard. Since September 1962.

NUMBER	DESCRIPTION	No. OFF
DS 541-03	Support for Cibie headlamp (R. VI). Until April 1961.	1
DS 541-03a	Support for Marchal headlamp (R. VI). Until April 1961.	1
DS 541-03b	Support for optic unit for Cibie headlamp (R. VI) ITALY All types April 1961 - September 1962.	2
DS 541-03c	Support for Marchal headlamp (R. VI). April 1961 - September 1962	2
DS 541-03d	Support for optic unit for Marchal headlamp (R. VI). Since September 1962.	2
DS 541-03e	Support for optic unit for Cibie headlamp (R. VI). Since September 1962.	2
DS 541-11	Dust cover for Cibie headlamp (R. VI) Until September 1962.	2
DS 541-11a	Dust cover for Marchal headlamp (R. VI). Until April 1961.	2
DS 541-11b	Dust cover for Cibie headlamp (R. VI) ITALY All types April 1961 - September 1962	2

NUMBER	DESCRIPTION	No. OFF
DS 541-13	Bulb holder for Cibie headlamp (R. VI). Until April 1961.	2
DS 541-13a	Bulb holder for Marchal headlamp (R. VI). Until April 1961.	2
DS 541-13b	Connector for bulb holder for Cibie headlamp (R. VI). ITALY All types - April 1961 - September 1962.	2
DS 541-13c	Connector for bulb holder for Marchal headlamp (R. VI). Since April 1961.	2
DS 541-13e	Connector for bulb holder for Cibie headlamp (R. VI). Since September 1962.	2
DS 541-97	Clip securing dust cover for Cibie headlamp (R. VI). Until April 1961.	2
D544-10	Tell-tale, red for headlamp lighting on front wing (R. VI). Since September 1962.	2
D544-11	Sealing joint for tell-tale on front wing. Until September 1962.	2
124-S 30	Screw, round head pointed 5 diameter 12.5 long securing headlamps on front wings (R. III).	12
615.711	Nut clips for 5 diameter screw securing headlamps (R. VI).	12

NUMBER	DESCRIPTION	No. OFF
706.670	Bulb 6 volts 36/45 watts for headlamps (R. VI). Until September 1960.	2
706.721	Bulb 6 volts 4 watts, 2 contacts for headlamps (R. VI). Until September 1960.	2
706.723	Bulb 6 volts (R. VI). ITALY Until September 1960.	2
706.724	Bulb 6 volts (R. VI). ITALY Until September 1960.	2
706.726	Bulb 12 volts 4 watts (R. VI) ITALY Since September 1960. All types Since April 1961.	2
706.727	Bulb 12 volts 45/40 watts for headlamp (R. VI) ITALY. Since September 1960. All types Since April 1961.	2
706.729	Bulb 12 volts, 4 watts, 2 contacts (R. VI). Until April 1961.	2
706.734	Bulb 12 volts, 36/45 watts for headlamps (R. VI). Until April 1961.	2

The numbers underlined indicate new parts and do not appear on the illustrations.

NUMBER	DESCRIPTION	No. OFF
	INTERIOR LIGHTING AND REAR BOOT LIGHTING	
D 522-7a	Switch on right and left hand front door pillar for interior and rear boot lighting (R. VI).	3
DM 522-7a	Switch on left hand front door pillar for interior light, length of plunger 27 mm. (R. VI). September 1958 - April 1959.	1
DS 545-3	Plate carrying rear interior lamp (R. VI).	2
DS 545-4a	Glass for rear interior lamp (R. VI).	2
DS 545-5	Tubular interior light with lining, on centre pillar (R. VI).	2
DS 545-6	Plate carrying bulb for tubular interior light on centre pillar, left hand (R. VI).	1
DS 545-6a	Plate carrying bulb for tubular interior light on centre pillar, right hand (R. VI).	1
DS 545-7b	Housing on tubular interior light, on centre pillar, right and left hand (R. VI).	2
DS 545-8	Plate securing housings (R. VI).	2
DS 545-9	Lamp for rear boot (without bulb) (R. VI).	1
DS 545-10	Transparent cover for rear boot lamp (R. VI).	1
DS 545-84	Support for rear boot lamp.	1
DS 545-87	Support for rear boot lamp switch.	1
DS 545-93	Clip for upper fixing of tubular light (R. VI).	2

NUMBER	DESCRIPTION	No. OFF
1.061-S	Grommet, rubber 8 x 18 x 4 for housings and rear boot light (R. III).	2
2.668-S	Screw, round head 3.5 x 10 (R. VI) securing:	
	- centre and rear plate	8
	- light supports and rear boot switch	3
615.714	Nut clips for 3.5 diameter screws securing rear boot lighting (R. VI).	2
615.715	Nut clips for 3.5 diameter screws securing rear boot lighting (R. VI).	2
707.193	Bulb 6 volts, 4 watts, 2 contacts (R. VI):	
	- centre and rear interior lights	4
	- rear boot light	1
707.194	Bulb 12 volts 4 watts for rear boot light (R. VI). Until September 1962.	1
	DIRECTION INDICATOR LIGHTS PARKING LIGHTS	
D 544-04a	Parking lamp without bulb (R. VI). Until August 1961.	2
D 575-1	Axo lamp (white), for front direction indicator, left hand, without bulb (R. VI).	1
D 575-1a	Axo lamp (white), for front direction indicator, right hand, without bulb (R. VI).	1
DS 575-1j	Axo lamp (orange and white) for front direction indicator, left hand, without bulb (R. VI). ITALY Since July 1961.	1

NUMBER	DESCRIPTION	No. OFF
DS 575-1k	Axo lamp (orange and white) for front direction indicator, right hand, without bulb (R. VI). ITALY Since July 1961.	1
DS 575-1p	Axo lamp (orange) for front direction indicator, left hand, without bulb (R. VI). GERMANY. Since July 1961.	1
DS 575-1q	Axo lamp (orange) for front direction indicator, right hand, without bulb (R. VI). GERMANY. Since July 1961.	1
DS 575-2	Seima rear direction indicator lamp (plastic), short left hand (R. VI). Until January 1959.	1
DS 575-2a	Seima rear direction indicator lamp (plastic), short, right hand (R. VI). Until January 1959.	1
DS 575-6	Seima rear direction indicator housing (plastic) short, left hand (R. VI) Until January 1959.	1
DS 575-6a	Seima rear direction indicator housing (plastic), short, right hand (R. VI). Until January 1959.	1
D 575-8b	Joint, metal for rear direction indicator light (plastic), short, left hand (R. VI) Until January 1959.	1
D 575-8c	Joint, metal for rear direction indicator light (plastic), short, right hand (R. VI). Until January 1959.	1
DS 575-8	Joint, rubber, sealing rear direction indicator light (metallic) right and left hand. Until September 1961.	2
DS 575-8f	Joint, rubber (moulded) sealing rear direction indicator light, right and left hand. Since September 1961.	2

The numbers underlined indicate new parts and do not appear on the illustrations.

NUMBER	DESCRIPTION	No. OFF
D 575-11	Thrust spring for blade of rear direction indicator light (R. VI). Until July 1960.	2
DS 575-15b	Housing, short, (metallic) for rear direction indicator light, left hand. Since February 1958. *Replaces long housing, order in addition: 1-DS 575-92d, 1-DS 575-68a, 1-DS 854-94b, 1-DM 821-104b.*	1
DS 575-15c	Housing, short, (metallic) for rear direction indicator light, right hand. Since February 1958. *Replaces long housing, order in addition: 1-DS 575-92a, 1-DS 575-69a, 1-DS 854-94c, 1-DM 821-104c.*	1
DS 575-28b	Reflector with orange glass and support for rear direction indicator lamp (R. VI).	2
DS 575-68	Plate securing direction indicator, right hand, on rear boot hinge, 65 mm. long. September 1956 - February 1958.	1
DS 575-68a	Plate securing direction indicator, right hand, on rear boot hinge, 50 mm. long. Since February 1958.	1
DS 575-69	Plate securing direction indicator, left hand, on rear boot hinge, 65 mm. long September 1956 - February 1958.	1
DS 575-69a	Plate securing direction indicator, left hand, on rear boot hinge, 50 mm. long Since February 1958.	1
D 575-91	Spring retaining reflector for rear direction indicator light (R. VI).	2
DS 575-92b	Cowl, left hand, for rear direction indicator light, long. Until February 1958.	1
DS 575-92c	Cowl, right hand, for rear direction indicator light, long. Until February 1958.	1
DS 575-92d	Cowl, left hand, for rear direction indicator light, short metallic. Since February 1958.	1

NUMBER	DESCRIPTION	No. OFF
DS 575-92e	Cowl, right hand, for rear direction indicator light, short metallic, Since February 1958.	1
2.652-S	Screw, P.K. 5 diameter 15 long securing front direction indicator light (R. VI).	4
2.668-S	Screw, P.K. round head 3.5 diameter 10 long, securing rear direction indicator light, long (R. VI).	4
2.746-S	Screw, P.K. round head cruciform slot 4.85 x 16 securing rear direction indicator light, short (R. VI).	2
615.710	Nut clips for 5 diameter screw, securing front direction indicator light (R. VI).	4
615.712	Nut clips for 4.85 diameter screw, securing rear direction indicator light, short (R. VI).	2
706.570	Bulb, 6 volts 15 watts for front and rear direction indicator lamps (R. VI). Until September 1960.	4
706.604	Bulb, 12 volts, 15 watts for front and rear direction indicator lamps (R. VI).	4
706.616	Bulb, 6 volts, 1.5 watts for parking light (R. VI). Until September 1960.	2
706.639	Bulb, 12 volts, 1.5 watts for parking light (R. VI) Until August 1961.	2
	REAR LIGHT - STOP LIGHT Until August 1961	
DM 544-02a	Rear lamp complete (without bulb) (R. VI).	2
DM 544-4	Cover for rear lamp (without support) (R. VI).	2
DM576-02a	Stop lamp switch (R. VI).	1
483-S 30	Screw, hex. head 7 diameter 15 long securing rear lamp (R. III).	4

NUMBER	DESCRIPTION	No. OFF
706.604	Bulb 12 volts, 15 watts, for stop lamp (R. VI).	2
706.609	Bulb 12 volts, 4 watts, for rear lamp (R. VI).	6
706.620	Bulb 6 volts, 4 watts, for rear lamp (R. VI). Until September 1960.	8
	REAR LIGHT - STOP LIGHT PARKING LIGHTS Since August 1961	
DW 544-02b	Seima rear light (without bulb) for lighting number plate, red light and parking light (R. VI).	2
DM 544-4	Cover for rear light (without support) (R. VI).	2
DS 576-02	Stop lamp switch (R. VI). Until September 1962.	1
DS 576-02a	Stop lamp switch (R. VI). Since September 1962.	1
483-S 30	Screw, hex. head 7 diameter 15 long, securing rear lamp (R. III).	4
706.604	Bulb 12 volts, 15 watts for stop lamp (R. VI).	2
706.732	Bulb 12 volts, 4 watts for lighting number plate, red light and parking light (R. VI).	6
	REFLECTOR Until July 1959	
	See page 212	
	Since July 1959	
DS 579-1	Reflector, rear, located in rear wing (R. VI).	2
DS 851-160	Clamp securing reflector on rear wing.	2

The numbers underlined indicate new parts and do not appear on the illustrations.

NUMBER	DESCRIPTION	No. OFF
	SPECIAL PARTS BERLINE WITH PARTITION	
D 545-2b	Interior light, front, complete (without bulb)(R. VI).	1
D 545-2c	Interior light, rear, complete (without bulb) (R. VI).	1
D 545-4	Glass for front interior light (R. VI).	1
D 545-4a	Glass for rear interior light (R. VI).	1

NUMBER	DESCRIPTION	No. OFF
	CABRIOLET	
DS 579-04	Seima, rear reflector, left-hand, with support (R. VI).	1
DS 579-04a	Seima, rear reflector, right-hand, with support (R. VI).	1
DS 575-20	Cover, rear left-hand for Seima direction indicator light (R. VI).	1
DS 575-20a	Cover, rear right-hand for Seima direction indicator light (R. VI).	1
DS 575-2h	Seima direction indicator light, rear left-hand, without bulb (R. VI).	1
DS 575-2i	Seima direction indicator light, rear right-hand, without bulb (R. VI).	1

NUMBER	DESCRIPTION	No. OFF
DS 544-02	Rear light, red, with lead (without bulb).	2
DS 544-03	Rear stop light, red, with lead (without bulb).	2
DS 544-5	Glass, red, for rear lights (R. VI).	4
706.604	Bulb, 12 volts, 15 watts, for rear stop lights (R. VI).	2
706.609	Bulb, 12 volts, 4 watts, for rear lights (R. VI).	2
706.704	Bulb, 12 volts, 3 watts, for rear number plate illumination light (R. VI).	2
DM 544-011	Rear number plate illumination lamp (without bulb) (R. VI).	2
DM 544-14	Plate securing rear light, stop light and number plate illumination light (R. VI).	2

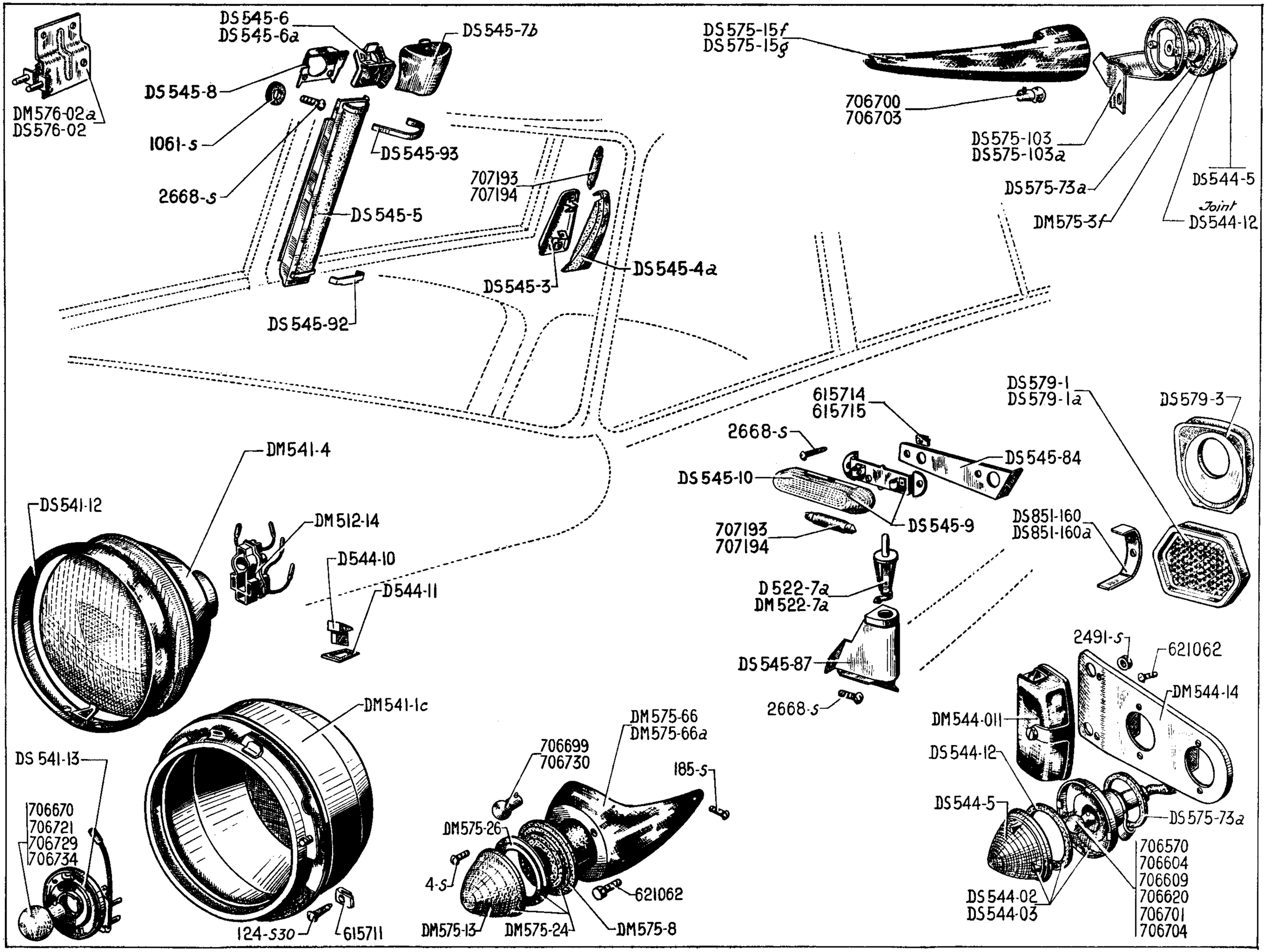
DS545-6
DS545-6a
DS545-7b
DS575-15f
DS575-15g
DM576-02a
DS576-02
DS545-8
1061-s
2668-s
DS545-93
707193
707194
DS545-5
706700
706703
DS575-103
DS575-103a
DS575-73a
DM575-3f
DS544-5
Joint
DS544-12
DS545-3
DS545-4a
DS545-92
615714
615715
DS579-1
DS579-1a
DS579-3
2668-s
DS545-84
DS545-10
DS545-9
707193
707194
DS851-160
DS851-160a
DM541-4
DS541-12
DM512-14
D544-10
D544-11
D522-7a
DM522-7a
DS545-87
2668-s
2491-s
621062
DM544-14
DM544-011
DS544-12
DS544-5
DS575-73a
706570
706604
706609
706620
706701
706704
DS544-02
DS544-03
DM541-1c
DS 541-13
706670
706721
706729
706734
124-s30
615711
706699
706730
DM575-66
DM575-66a
185-s
DM575-26
4-s
621062
DM575-13
DM575-24
DM575-8

MAKE OF HEADLAMP	EXTERNAL DIAMETER OF HEADLAMP	SHAPE OF GLASS	DIAMETER OF GLASS	NUMBER OF HEADLAMP	NUMBER OF GLASS	NUMBER OF RIM	REMARKS
CIBIE	226	Convex	183	DM 541-1c (R. VI) (without optic)	DM 541-4 (R. VI) (optic assembly)	DS 541-12 (R. VI)	Headlamp without optic for U.S.A.

NUMBER	DESCRIPTION	No. OFF
DM 512-14	Connector for Cibie headlamp (R. VI).	2
DS 541-13	Bulb holder for Cibie headlamp (R. VI).	2
D 544-10	Tell-tale, red, for headlamp lighting on front wing (R. VI).	2
D 544-11	Joint sealing tell-tale on front wing (R. VI).	2
124-S 30	Screw, round head, pointed, 5 diameter x 12.5 long, securing headlamps on wing (R. III).	12
615.711	Nut clips, for 5 diameter screws securing headlamps (R. VI).	12
706.670	Bulb, 6 volts, 36/45 watts, for headlamps (R. VI). Until September 1960.	2
706.721	Bulb, 6 volts, 4 watts, 2 contacts for headlamps (R. VI). Until September 1960.	2
706.729	Bulb, 12 volts, 4 watts, 2 contacts for headlamps (R. VI). Since September 1960.	2
706.734	Bulb, 12 volts, 45 watts, for headlamps (R. VI). Since September 1960.	2

NUMBER	DESCRIPTION	No. OFF
	INTERIOR LIGHTING AND REAR BOOT LIGHTING	
D 522-7a	Switch on front door pillar, right and left-hand for interior lighting and rear boot lighting (R. VI).	3
DM 522-7a	Switch on front door pillar, left-hand for interior lighting, length of plunger 27 mm (R. VI). September 1958 - April 1959.	1
DS 545-3	Support plate for rear interior lamp (R. VI).	2
DS 545-4a	Glass for rear interior light (R. VI).	2
DS 545-5	Interior light tube with lining, on centre pillar (R. VI).	2
DS 545-6	Support plate for bulb of tubular light on centre pillar, left-hand (R. VI).	1
DS 545-6a	Support plate for bulb of tubular light on centre pillar, right-hand (R. VI).	1
DS 545-7b	Housing for tubular lighting on centre pillar, right and left-hand (R. VI).	1
DS 545-8	Clip securing housings (R. VI).	2
DS 545-9	Lamp for rear boot (without bulb) (R. VI).	1
DS 545-10	Cover, transparent, for rear boot light (R. VI).	1

NUMBER	DESCRIPTION	No. OFF
DS 545-84	Support for rear boot light.	1
DS 545-87	Support for switch for rear boot.	1
DS 545-92	Plate for lower fixing of light tube (R. VI).	2
DS 545-93	Plate for upper fixing of light tube (R. VI).	2
1.061-S	Grommet, rubber, 8 x 18 x 4, for housings and rear boot light (R. III).	2
2.668-S	Screw, round head, 3.5 x 10 (R. VI) securing:	
	- centre and rear plate.	8
	- light supports and rear boot switch.	3
615.714	Nut clips for 3.5 diameter screws, securing rear boot light (R. VI).	2
615.715	Nut clips for 3.5 diameter screws, securing rear boot light (R. VI).	2
706.717	Bulb, 12 volts, 7 watts, for centre and rear interior lights (R. VI).	4
707.193	Bulb, 6 volts, 4 watts, 2 contacts (R. VI):	
	- for centre and rear interior lighting.	4
	- for rear boot lighting. Until December 1959.	1
707.194	Bulb, 12 volts, 4 watts, 2 contacts for rear boot lighting (R. VI). Since December 1959.	1

NUMBER	DESCRIPTION	No. OFF
	LUCAS FRONT AND REAR DIRECTION INDICATOR LIGHTS	
DS 544-5	Glass, red for rear direction indicator lights (R.VI).	2
DS 544-12	Joint, foam rubber for internal sealing of rear indicator lights (R.VI).	4
DM 575-3f	Direction indicator light, rear right and left hand with lead (without bulb)	2
DM 575-8	Joint rubber, for front direction indicator light (R.VI).	2
DM 575-13	Glass, white for front direction indicator light (R.VI).	2
DS 575-15f	Housing, short for rear direction indicator light, left hand.	1
DS 575-15g	Housing, short for rear direction indicator light, right hand.	1
DM 575-24	Direction indicator lamp, front (without bulb) R.VI).	2
DM 575-26	Collar for front direction indicator light (R.VI).	2
DM 575-66	Housing for front direction indicator light, left hand.	1
DM 575-66a	Housing for front direction indicator light, right hand.	1
DS 575-73a	Joint, round, rubber for rear direction indicator light, right and left hand (R.VI).	2
DS 575-103	Support securing rear direction indicator light, left hand.	1
DS 575-103a	Support securing rear direction indicator light, right hand.	1
4-S	Screw, round head 3 diameter 12 long securing front direction indicator lights (R.III).	6

NUMBER	DESCRIPTION	No. OFF
185-S	Screw, raised head countersunk 5 diameter 15 long for rear fixing of front direction indicator housings (R.III).	2
621.062	Screw, hex. head 5 diameter 14 long for front fixing of front direction indicators (R.III).	4
706.699	Bulb 6 volts 20.4 watts, for front direction indicators (R.VI). Until December 1959.	2
706.700	Bulb 6 volts 25 watts, for rear direction indicator lights (R.VI). Until December 1959.	2
706.703	Bulb 12 volts for rear direction indicator lights (R.VI). Since December 1959.	2
706.730	Bulb 12 volts for front direction indicator lights (R.VI). Since December 1959.	2
	LUCAS REAR LIGHT -STOP LIGHT	
DS 544-02	Rear light, red with lead (without bulb).	2
DS 544-03	Rear stop light, red with lead (without bulb).	2
DM 544-011	Rear registration number plate illumination lamp (without bulb) (R.VI).	2
DS 544-5	Glass, red for rear lights (R.VI).	4
DS 544-12	Joint, foam rubber for interior sealing of rear lights (R.VI).	4
DM 544-14	Plate securing rear stop lights and registration number plate light (R.VI)	2
DM 576-02a	Switch for stop lamp (R.VI). Until August 1961.	1
DS 576-02	Switch for stop lamp (R.VI). August 1961 - September 1962.	1
DS 576-02a	Switch for stop lamp (R.VI). Since September 1962.	1

NUMBER	DESCRIPTION	No. OFF
2.491-S	Nut, hex. 7 diameter 100 pitch securing rear light (R.III).	2
621.062	Screw, hex. head 5 diameter 14 long securing rear lights on plate (R.III).	8
706.570	Bulb, 6 volts, 15 watts, for rear stop lights (R.VI). Until December 1959.	2
706.604	Bulb, 12 volts, 15 watts, for rear stop lights (R.VI). Since December 1959.	2
706.609	Bulb, 12 volts, 4 watts, for rear lights (R.VI). Since December 1959.	2
706.620	Bulb, 6 volts 4 watts, for rear lights (R.VI). Until December 1959.	2
706.701	Bulb, 6 volts 2.7 watts for rear number plate illumination light (R.VI). Until December 1959.	2
706.704	Bulb, 12 volts, 3 watts for rear number plate illumination light (R.VI). Since December 1959.	2
	REFLECTOR Until July 1959	
	See page 212	
	Since July 1959	
DS 579-1	Reflector, rear, seated in rear wing (R.VI). Since November 1961.	2
DS 579-1a	Reflector, rear, round on support seated in rear wing (R.VI). Until November 1961.	2
DS 579-3	Joint (support) for round seated reflector (R.VI). Until November 1961.	2
DS 851-160	Clamp securing seated reflector. Since November 1961.	2
DS 851-160a	Clamp securing round reflector on support. Until November 1961.	2

NUMBER	DESCRIPTION	No. OFF
	SUN VISOR	
DS 554-83	Hinge pin, not threaded.	2
D 554-90	Plug, rubber (grey) (R.VI).	2
D 554-90a	Plug, rubber (beige) (R.VI).	2
D 554-1	Panel, left hand (grey)	1
D 554-1a	Panel, left hand (beige)	1
DS 554-1a	Panel for sun visor, with mirror, right hand (grey)	1
DS 554-1c	Panel for sun visor, with mirror, right hand (beige)	1
2.494-S	Nut, hex. castellated 7 diameter 100 pitch for tightening hinge pin on bracket (R.III).	2
615.713	Nut clip for 4.85 diameter screw, securing sun visor (R.VI).	6
D 554-96	Friction sleeve, on hinge pin (R.VI).	2
D 554-91	Friction bearing, 18 mm. long, on hinge pin (R.VI).	4
DS 554-01	Sun visor complete, left hand (grey)	1
DS 554-01d	Sun visor complete, left hand (beige)	1
DS 554-01i	Sun Visor complete, with mirror, right-hand (grey)	1
DS 554-01k	Sun Visor complete, with mirror, right hand (beige)	1

NUMBER	DESCRIPTION	No. OFF
619.037	Washer 7.5 x 21 x 0.5 for hinge pin friction on support (R.III).	4
619.056	Washer 7.5 x 21 x 0.8 for hinge pin on support (R.VI).	2
DS 554-97	Support, only left hand.	1
DS 554-97a	Support, only right hand.	1
2.746-S	Screw, P.K. round head 4.85 diameter 16 long, securing sun visor (R.VI).	6
	REAR VIEW MIRROR Until August 1961	
D 551-88	Hinge pin, 1.7 mm. diameter 60 mm. long (R. VI).	1
D 551-1	Casing, fixed, with ball pivot (R.VI).	1
D 551-5	Casing, movable (R.VI).	1
D 551-7	Frame, rubber 55.6 x 125.6 for movable casing (R.VI).	1
D 551-6	Glass, 55 x 125 x 1.8 anti-reflecting (R.VI).	1
D 551-86	Joint, anti-rattle (R.VI).	1
D 551-4	Mirror, 50 x 120 x 1.8 (R.VI).	1
D 551-87	Spring for casing (R.VI).	1
D 551-2	Support.	1

NUMBER	DESCRIPTION	No. OFF
	August 1961 - December 1961	
D 551-88	Hinge pin, 1.7 mm. diameter 60 mm. long (R.VI).	1
DW 551-1	Casing, fixed, with ball pivot (R.VI).	1
DW 551-5	Casing, movable (R.VI).	1
D 551-6	Glass, 55 x 125 x 1.8 anti-reflecting (R.VI).	1
D 551-4	Mirror 50 x 120 x 1.8 (R.VI).	1
D 551-87	Spring for casing (R.VI)	1
DW 551-3	Rear view mirror complete (R.VI).	1
DW 551-2	Support for rear view mirror (R.VI).	1
	Since December 1961	
DW 551-92	Buffer (rubber) 5 mm. thick for support.	1
DW 551-92a	Buffer (rubber) 10 mm. thick for support.	1
2.491-S	Nut, hex. 7 diameter 100 pitch, securing support (R.III).	1
D 551-87	Spring for casing (R.VI).	1
88.613	Washer, plain 7.5 x 30 x 2.4 for nut securing support (R.III).	1
DW 551-3b	Rear view mirror complete (R.VI).	1
DW 551-2a	Support for rear view mirror (R.VI).	1

NUMBER	DESCRIPTION	No. OFF
	CABLES BY THE METRE (R.VI)	
3.732	Single core cable 2 mm. thick	As nec.
3.733	Single core cable 1.2 mm. thick	As nec.
3.736	7 mm. cable for spark plug leads	As nec.
921.552	40 mm^2. battery cable.	As nec.
	BATTERY CABLES 6 volt arrangement U.S.A. Until December 1959 ALL TYPES Until September 1960	
DS 511-5	Cable from battery positive terminal to solenoid, 130 mm. long, dimension taken between clip and terminal lug. Until July 1957.	1
DM 511-8	Cable from battery negative terminal to water pump, 450 mm. long, dimension taken between clip and terminal lug. October 1957 - October 1958.	1
DS 511-8	Cable from battery negative terminal to gearbox, 700 mm. long, dimension taken between clip and terminal lug. Until October 1957.	1
DS 511-17	Cable from solenoid switch to starter motor, 830 mm. long, dimension taken between terminal lugs. Until July 1957.	1

NUMBER	DESCRIPTION	No. OFF
DM 511-8a	Cable 20 mm from battery negative terminal to water pump 450 mm long. Since October 1958.	1
DM 524-01a	Solenoid, Gelbon, 6 volts, for starter with positive cable (R. VI). Since July 1957.	1
	BATTERY CABLES 12 volt arrangement PRESTIGE Since June 1959 U.S.A. Since December 1959 ALL TYPES Since September 1960	
DM 511-8c	Cable from battery negative terminal to earth on water pump 590 mm long.	1
DM 524-01b	Solenoid, Gelbon 12 volts for starter with positive cable (R. VI). Until August 1961.	1
DM 524-01c	Solenoid, Gelbon 12 volts for starter with positive cable (R. VI). Since August 1961.	1
	WIRING HARNESS 6 volt arrangement U.S.A. Until December 1959 ALL TYPES Until September 1960	
DS 511-3	Harness, rear. Until July 1959.	1
DS 511-3a	Harness, rear (arrangement with front harness for one coil). Since July 1959.	1

NUMBER	DESCRIPTION	No. OFF
DS 511-6	Harness for headlamp and front direction indicator, with earth wire. Until February 1957.	2
DS 511-6a	Harness for headlamp and front direction indicator, with earth wire. February 1957 - June 1957.	2
DM 511-6	Harness for headlamp, front direction indicator and horn, left hand. Since June 1957.	1
DM 511-6a	Harness for headlamp, front direction indicator and horn, right hand. Since June 1957.	1
DS 511-6b	Harness for headlamp and direction indicator, left hand. U.S.A.	1
DS 511-6c	Harness for headlamp and direction indicator, right hand. U.S.A.	1
DS 511-9	Harness, front. Until February 1957.	1
DS 511-9a	Harness, front. February 1957 - June 1957.	1
DS 511-9b	Harness, front (arrangement with horns on left side). June 1957 - September 1958.	1
DS 511-9c	Harness, front arrangement with switch for interior light on front door, left hand). September 1958 - July 1959.	1
DS 511-9f	Harness, front (arrangement with one coil). Since July 1959.	1
DS 511-19	Wiring from coil to distributor. Until July 1959.	1
DM 511-63	Earth wire (headlamp and front direction indicator).	1
DF 511-19	Lead from coil to switch, 450 mm long. Since July 1959.	1

NUMBER	DESCRIPTION	No. OFF
	12 volt arrangement **PRESTIGE** **Since June 1959** **ALL TYPES** **(Except U.S.A.)** **Since September 1960**	
DS 511-9h	Harness, front. PRESTIGE. Until August 1961.	1
DS 511-23	Harness, front. Until August 1961.	1
DS 511-23b	Harness, front (rear heating and demisting). Cold climates. December 1960 - August 1961.	1
DS 511-23g	Harness, front. CABRIOLET. Until August 1961.	1
DW 511-23	Harness, front. (except PRESTIGE). Since August 1961.	1
DM 511-24m	Harness, rear. CABRIOLET.	1
DS 511-24	Harness, rear. Until August 1961.	1
DS 511-24a	Harness, rear (rear heating and demisting). Cold climates. December 1960 - August 1961.	1
DW 511-24	Harness, rear (except PRESTIGE). Since August 1961.	1

NUMBER	DESCRIPTION	No. OFF
DW 511-24a	Harness, rear (rear heating and demisting). Cold climates. Since August 1961.	1
DM 511-25	Harness for headlamp, horn and front direction indicator, left hand. Until September 1962.	1
DM 511-25a	Harness for headlamp and front direction indicator, right hand. Until September 1962.	1
DS 511-25	Harness for headlamp, horn and front direction indicator, left hand. Since September 1962.	1
DS 511-25a	Harness for headlamp and front direction indicator, right hand. Since September 1962.	1
DS 511-29	Auxiliary Harness, left hand. PRESTIGE. June 1959 - August 1961.	1
DS 511-29a	Auxiliary harness, right hand. PRESTIGE. June 1959 - August 1961.	1
DM 511-63	Earth wire (headlamp and front direction indicator). Until September 1962.	2
DM 511-63a	Earth wire (headlamp and front direction indicator) Since September 1962.	2
DF 511-19	Lead from coil to distributor, 450 mm long.	1

NUMBER	DESCRIPTION	No. OFF
	12 volt arrangement **U.S.A.** **Since December 1959**	
DS 511-3c	Harness, rear. December 1959 - August 1961.	1
DS 511-6b	Harness for headlamp and direction indicator, left hand. Until September 1960.	1
DS 511-6c	Harness for headlamp and direction indicator, right hand. Until September 1960.	1
DS 511-9g	Harness, front. Until September 1960.	1
DM 511-6f	Harness for headlamp and front direction indicator, left hand. Since September 1960.	1
DM 511-6g	Harness for headlamp and front direction indicator, right hand. Since September 1960.	1
DS 511-23a	Harness, front. Until August 1961.	1
DW 511-23	Harness, front. Since August 1961.	1
DW 511-24	Harness, rear. Since August 1961.	1
DW 511-24a	Harness, rear. (rear heating and demisting). Cold climates. Since August 1961.	1
DM 511-63	Earth wire for headlamp and front direction indicator.	2
DF 511-19	Lead from coil to distributor, 450 mm long.	1

NUMBER	DESCRIPTION	No. OFF
	ELECTRICAL EQUIPMENT	
A 512-5b	Bush, rubber 3.5 x 6.5 x 20 for 4 mm socket (R. VI).	As nec.
D 511-97	Bush, split rubber 4 x 16 x 20 for passage of front harness in dashframe, right hand.	1
D 511-98	Bush, split rubber 12.5 x 50 x 20 for passage of front harness in dashframe, left hand.	1
DS 511-95	Bush, rubber 3 x 19 x 45 for passage of rear direction indicator wire in body.	2
722.458	Junction with 1 terminal (R. III).	1
722.592	"Axo" positive clip for battery with screw (R. VI).	1
722.593	"Axo" negative clip for battery with screw (R. VI).	1
711.472	Terminal lug 8.5 mm for battery cable (R. III).	4
710.022	Nut, special 5 diameter 75 pitch for ebonite terminal (R. VI).	1
A 512-3	Socket, 2.5 mm diameter for lead on coil.	4
A 512-3b	Socket, 4 mm diameter for leads (R. VI).	As nec.

NUMBER	DESCRIPTION	No. OFF
A 512-4a	Plug, 4 mm diameter for leads (R. VI).	As nec.
D 511-76	Gutter protecting front harness. Until July 1959.	1
D 512-7a	Socket on instrument board (R. VI). Until August 1961.	1
722.429	Washer for battery terminal (R.III).	2
D 511-66	Tube protecting wiring under radiator, 610 mm long.	1
D 511-82	Tube carrying rear harness through gusset of centre pillar 60 mm long (R. VI). Until February 1957.	1
D 511-83	Tube carrying rear harness in left hand sidemember 340 mm long (R. VI). Until February 1957.	1
	12 VOLT FUSES **Arrangement Prestige and U.S.A.** **Until August 1961**	
DM 523-4	Fuse 30 amp (R. VI).	2
DS 523-99	Rubber packing between support and fuse (R. VI).	1
DM 523-1	Support for fuse (R. VI).	1
DS 523-98	Bracket, intermediate for fuse support.	1

NUMBER	DESCRIPTION	No. OFF
	ALL TYPES **(Except U.S.A.)** **September 1960 - August 1961**	
DM 523-4	Fuse 30 amp. (R. VI).	4
DM 523-99	Rubber packing 80 x 68 x 2 for fuse support (R. VI).	1
DM 523-6	Support for fuse 80 x 68 x 28 (R. VI).	1
	ALL TYPES **Since August 1961**	
DM 523-4	Fuse 30 amp (R. VI).	4
DM 523-99	Rubber packing 80 x 68 x 2 for fuse support (R. VI).	1
DW 523-6	Support for fuse 80 x 68 x 28 (R.VI).	1
2.610-S	Screw, raised head countersunk 3.5 x 15 securing support (R. VI).	2
	HORNS **ASSEMBLY FOR THE RIGHT AND FOR THE LEFT** **Until June 1957**	
D 571-1	*Horn, town use (R. VI). No longer supplied.*	1
D 571-2	*Horn, country use (R. VI). No longer supplied.*	1
D 571-99	Support for country use horn, left hand.	1
D 571-99a	Support for town use horn, right hand.	1
482-S	Screw, hex. head 7 diameter 12.5 long securing supports (R. III).	4

NUMBER	DESCRIPTION	No. OFF
	ARRANGEMENT FOR LEFT HAND **June 1957 - September 1962**	
DM 571-1	Ferson horn for town use, 6 volts (R. VI). Until September 1960.	1
DM 571-2	Ferson horn for country use, 6 volts (R. VI). Until September 1960.	1
DM 571-3	Ferson horn for town use, 12 volts (R. VI). PRESTIGE. Since June 1959. U.S.A. Since December 1959. All Types. Since September 1960.	1
DM 571-4	Ferson horn for country use, 12 volts (R. VI). PRESTIGE. Since June 1959. U.S.A. Since December 1959. All Types. Since September 1960.	1

NUMBER	DESCRIPTION	No. OFF
2.503-S	Nut, hex. 7 diameter 100 pitch for the screw securing blades on support (R. III).	1
DM 571-98	Blade support for country use horn.	2
DM 571-99	Support for country and town use horn.	1
483-S	Screw, hex. head 7 diameter 15 long securing blades on support (R. III).	1
485-S-30	Screw, hex. head 7 diameter 20 long securing support on body (R. III).	2

NUMBER	DESCRIPTION	No. OFF
	ARRANGEMENT FOR RIGHT HAND AND LEFT HAND **Since September 1962**	
DM 571-3a	Ferson horn for town use, 12 volts, left hand (R. VI).	1
DM 571-4	Ferson horn for country use, 12 volts, right and left hand (R. VI).	2
2.503-S	Nut, hex 7 diameter 100 pitch, securing blades on support (R. III).	2
DM 571-98	Blade support for country use horn.	4
DS 571-97	Support for town use horn.	1
DS 571-99	Support for country use horn.	2
483-S	Screw, hex. head 7 diameter 15 long securing blades on support (R.III).	2

RADIO TELEPHONE
Since September 1961

NUMBER	DESCRIPTION	No. OFF
619.809	Clip retaining wire for loud-speaker (R. VI).	4
DW 653-01	"Ara" aerial (R. VI).	1
DW 653-69	Aerial cover (R. VI).	1
DW 653-1	"Ara" suppression condenser on coil and dynamo regulator (R. VI).	2
2.320-S	Nut, hex, 5 diameter 75 pitch, securing condenser on coil (R. III).	1
615.747	Nut clips for screws securing loud-speaker (R. VI).	4
2.269-S	Nut, hex. 4 diameter 75 pitch for screws securing loud-speaker (R.III).	4
DW 653-47	Surround for loud-speaker grille (R. VI).	1
DW 653-05	Assembly for radio telephone comprising:- Aerial, loud-speaker and fixing (R. VI).	1
DW 653-58	Distance piece 6 diameter 15 long for screws securing loud-speaker (R. VI).	1
DW 653-60	Wire for loud-speaker (R. VI).	1
DW 653-55	Grille protecting loud-speaker (R. VI).	1
DW 653-10	"Audax" loud-speaker (R. VI).	1
DW 653-56	Joint (cardboard) for sound deadening between grille and surround for loud-speaker (R. VI).	1
DW 653-0a	Radio telephone, only (R. VI).	1
DW 653-57	Protector (cloth) for loud-speaker (R. VI).	1
DW 653-59	Protector for co-axial aerial on front pillar (R. VI).	1
2.262-S	Washer 4.25 x 10 for screws securing loud-speaker (R. III).	4
2.281-S	Screw, raised head countersunk 4 diameter 25 long, securing loud-speaker (R. VI).	4
2.756-S	Screw, round head 3.5 x 9.5 securing radio earth wire (R VI).	1

NUMBER	DESCRIPTION	No. OFF
	WHEEL ACCESSORIES	
DS 622-7	Stand for changing wheel. Since February 1956.	1
DS 854-78	Rubber buffer for sound deadening wheel embellisher 32 x 16 x 2.5. February 1956 - February 1957.	12
DS 854-72	Rubber buffer for sound deadening wheel embellisher 5 mm diameter 40 mm long. Since February 1957.	24
DS 622-55	Spanner for stand with embellisher remover.	1
D 623-0a	Jack (R. VI). BERLINE. Until February 1956.	1
DS 623-0	Jack (R. VI). CABRIOLET.	1
DS 621-3	Tool for removing wheel embellisher. Until November 1957.	1
D 622-106	Disc on stand spanner. (R. VI).	1
DS 854-3c	Wheel embellisher fitted with 6 sound deadening buffers. Replaces early type.	4
DS 416-80a	Balance weight for wheel, 20 grammes (R. VI). Since January 1962.	As nec.
DS 416-80b	Balance weight for wheel, 30 grammes (R. VI). Since January 1962.	As nec.

NUMBER	DESCRIPTION	No. OFF
DS 416-80c	Balance weight for wheel, 40 grammes (R. VI). Since January 1962.	As nec.
DS 416-80e	Balance weight for wheel, 60 grammes (R. VI). Since January 1962.	As nec.
392.629	*Balance weight for wheel, 30 mm long (R. VI) Until January 1962. Replaced by DS 416-80a.*	As nec.
392.630	Balance weight for wheel, 35 mm long (R. VI). Until January 1962.	As nec.
392.631	Balance weight for wheel, 55 mm long (R. VI). Until January 1962.	As nec.
392.632	Spring for wheel balance weight (R.VI). Until January 1962.	As nec.
DS 854-90a	Spring securing wheel embellisher. Until February 1957.	16
	Since February 1957.	12
D 622-4	Strap securing sparewheel. Until September 1962.	1
DS 622-4	Strap securing sparewheel. Since September 1962.	1
D 622-6	Strap, fixed, securing sparewheel.	1
DS 622-99	Support, rear, for sparewheel with securing clips for starting handle and extension. Until September 1962.	1
DS 622-97c	Support, rear, for sparewheel. Since September 1962.	1
483-S	Screw, hex. head 7 diameter 15 long, securing support for sparewheel (R. III).	2

NUMBER	DESCRIPTION	No. OFF
	TOOLS	
DS 251-2	Starting handle spindle with pin. June 1957 - March 1962.	1
DS 251-2a	Starting handle spindle with pin. Since March 1962.	1
DS 625-96a	Strap retaining oil can.	1
DS 621-1	Spanner for sparking plugs (R. VI).	1
650.139	Spanner closed end 12 sided (R. VI).	1
650.147	Spanner, double ended 8 x 10 (R. VI).	1
650.148	Spanner, double ended 12 x 14 (R. VI).	1
650.232	Spanner, double ended 7 x 9 (R. VI).	1
D 251-1	Starting handle.	1
648.522	Universal pliers (R. VI).	1
D 251-4a	Extension for starting handle, 25 mm diameter 595 mm long. Until June 1957. BERLINE.	1
DS 251-4a	Extension for starting handle, 25 mm diameter total length 615 mm BERLINE. June 1957 - September 1962.	1
DS 251-4b	Extension for starting handle. CABRIOLET. Until September 1962.	1
DS 251-4c	Extension for starting handle. BERLINE. Since September 1962.	1
DS 251-4d	Extension for starting handle. CABRIOLET. Since September 1962.	1
D 251-79	Spring for upper fixing of starting handle.	1
D 251-81	Spring retaining extension for starting handle.	1
650.137	Screwdriver (R. VI).	1

NUMBER	CHARACTERISTICS	TYPE	REMARKS
	NOTE - The bodies are supplied, without side doors, rear boot door, bonnet, roof or front and rear wings.		
D 8-05b	Body, 2 holes for brake accumulator on sidemember, left-hand, holes for ventilation and heating 165 mm wide. Replaces earlier type. See MR 4.278-10 and 4.292-10. For arrangement, until October 1959; order in addition: 2-DS 443-71, 2-DS 443-88, 2-DS 412-86.	BERLINE	Until July 1960.
DS 8-05b	Body, 1 hole for brake accumulator on sidemember, left-hand, holes for ventilation and heating 165 mm wide, engine recess with housing panel for damper.	BERLINE	July 1960 - August 1961.
DS 8-05f	Body, 1 hole for brake accumulator on sidemember, left-hand, holes for ventilation and heating 101 mm wide, engine recess with housing panel for damper.	BERLINE	August 1961 - September 1962.
DS 8-05h	Body, 1 hole for brake accumulator on sidemember, left-hand, holes for ventilation and heating 101 mm wide, engine recess with housing panel for damper.	CABRIOLET	August 1961 - September 1962.
DS 8-05i	Body, fixing for exhaust silencer under front seats.	BERLINE	Since September 1962.
DS 8-05j	Body, fixing for exhaust silencer under front seats.	CABRIOLET	Since September 1962.

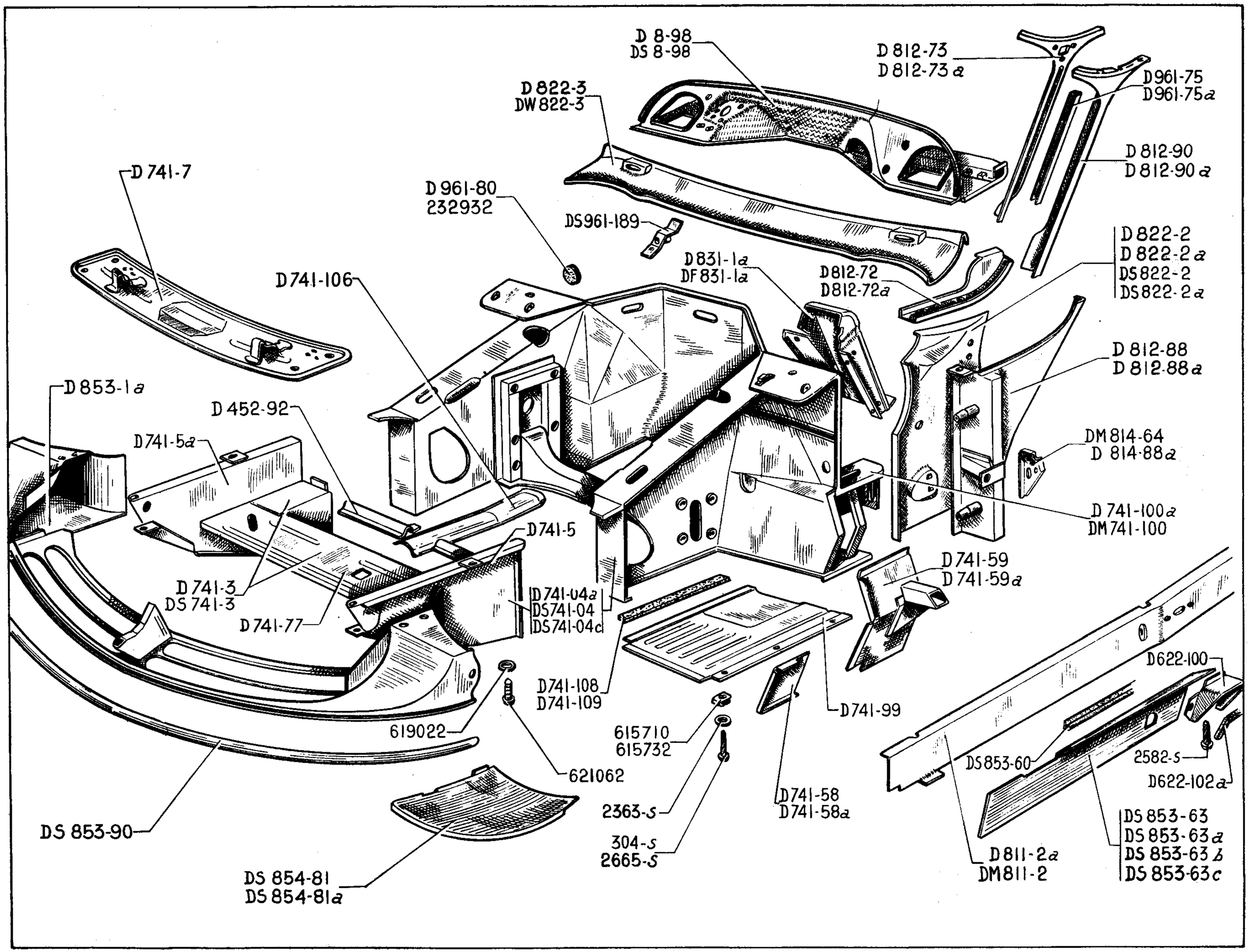
D 8-98
DS 8-98
D 812-73
D 812-73a
D961-75
D961-75a
D 822-3
DW 822-3
D 812-90
D 812-90a
D 741-7
D 961-80
232932
DS961-189
D 822-2
D 822-2a
DS 822-2
DS 822-2a
D 831-1a
DF 831-1a
D 812-72
D 812-72a
D741-106
D 812-88
D 812-88a
D 853-1a
D 452-92
D741-5a
DM 814-64
D 814-88a
D 741-100a
DM 741-100
D741-5
D 741-59
D 741-59a
D 741-3
DS 741-3
D741-04a
DS741-04
DS741-04c
D 741-77
D622-100
D741-108
D741-109
D741-99
619022
615710
615732
DS853-60
2582-S
621062
D622-102a
D741-58
D741-58a
2363-S
DS 853-90
DS 853-63
DS 853-63a
DS 853-63b
DS 853-63c
304-S
2665-S
D 811-2a
DM811-2
DS 854-81
DS 854-81a

NUMBER	DESCRIPTION	No. OFF
D 8-98	Upper dashframe with scuttle shelf and crossmember, hole for ventilation 165 mm wide. Until August 1961.	1
DS 8-98	Upper dashframe with scuttle shelf and crossmember, hole for ventilation 101 mm wide. Since August 1961.	1
D 452-92	Crossmember carrying ducts for cooling brakes. Until September 1962.	2
D 622-100	Protection panel for sealing rubber for jacking housing. Until September 1962.	2
D 622-102a	Lining for finishing panel, 60 mm long. (R. VI).	2
D 741-04a	*Front unit for caisson, lower rear stay for mounting 14 mm diameter for fixing spindle, machined portion 28 mm long 2 holes for brake accumulator, on sidemember, left hand. Until October 1959. Replaced by DS 741-04; order in addition; 2-DS 412-86, 2-DS 443-71, 2-DS 443-88 (see MR 4·278-10 and 4·292-10).*	1
DS 741-04	Front unit for caisson, lower rear stay for mounting, 14 mm diameter for fixing spindle, machined portion 22 mm long, 2 holes for brake accumulator, on sidemember, left hand. October 1959 - July 1960.	1
DS 741-04c	Front unit for caisson, engine recess with housing panel for damper, 1 hole for brake accumulator on sidemember, left hand. July 1960 - September 1962.	1
DS 741-04d	Front unit for caisson with intermediate crossmember. Since September 1962.	1
D 741-3	Front unit for caisson (front part) 2 holes for brake accumulator, on sidemember, left hand. Until July 1960.	1
DS 741-3	Front unit for caisson (front part) 1 hole for brake accumulator on sidemember left hand. July 1960 - September 1962.	1

NUMBER	DESCRIPTION	No. OFF
DS 741-3a	Front unit for caisson (front part) with intermediate crossmember. Since September 1962.	1
D 741-5	Sidemember, front (front part) with intermediate crossmember, left hand. Until September 1962.	1
D 741-5a	Sidemember, front unit, right hand. Until September 1962.	1
DS 741-5	Sidemember, front, front unit, left hand. Since September 1962.	1
DS 741-5a	Sidemember, front, front unit, right hand. Since September 1962.	1
D 741-7	Crossmember, front for sparewheel. Until September 1962.	1
DS 741-7a	Crossmember, front for sparewheel with starting handle bracket. Since September 1962.	1
D 741-58	Closing panel for front unit and front body siderail, left hand.	1
D 741-58a	Closing panel for front unit and front body siderail, right hand.	1
DS 741-58b	Closing panel for sidemember siderail, left hand. Since September 1962.	1
DS 741-58c	Closing panel for sidemember siderail, right hand. Since September 1962.	1
D 741-59	Lateral closing panel for front sidemember, left hand.	1
D 741-59a	Lateral closing panel for front sidemember, right hand.	1
D 741-77	Crossmember, front, front unit, with yokes. Until September 1962.	1
DS 741-78	Distance piece for front unit between sidemember and siderail. Since September 1962.	2
DS 741-91a	Siderail for front unit, left hand. Since September 1962.	1

NUMBER	DESCRIPTION	No. OFF
DS 741-91b	Siderail for front unit, right hand. Since September 1962.	1
D 741-99	Closing panel, only for the front part unit. Until September 1962.	2
DS 741-99	Closing panel for front unit. Since September 1962.	1
D 741-100a	Sidemember with upper fixing angle plate, for heater duct and reinforcement, right hand. Until September 1962.	1
DM 741-100	Sidemember with reinforcement, left hand.	1
DM 741-100a	Sidemember with distance piece and reinforcement, right hand. Since September 1962.	1
D 741-106	Connecting panel between front crossmember and centre crossmember of front unit. Until September 1962.	1
D 741-108	Sound deadening felt 240 x 15 x 4 for closing front part of the front unit. Until July 1960.	2
	July 1960 - September 1962.	4
D 741-109	Sound deadening felt 435 x 15 x 4 for closing front part of the front unit. Until July 1960.	4
D 811-2a	Siderail for bottom of body, right hand.	1
DM 811-2	Siderail for bottom of body, left hand.	1
D 812-72	Closing panel, upper for front pillar, left hand.	
D 812-72a	Closing panel, upper for front pillar, right hand.	1
D 812-73	Closing panel, inner for front pillar, (upper part of body) left hand.	1
D 812-73a	Closing panel, inner for front pillar (upper part of body), right hand.	1

The numbers underlined indicate new parts and do not appear on the illustrations.

NUMBER	DESCRIPTION	No. OFF
D 812-88	Front pillar (lower part of body) left hand.	1
D 812-88a	Front pillar (lower part of body) right hand.	1
D 812-90	Front pillar (upper part of body) left hand.	1
D 812-90a	Front pillar (upper part of body) right hand.	1
DM 814-64	Gusset, lower for front pillar with hole for wiring, left hand.	1
D 814-88a	Gusset, lower for front pillar, right hand.	1
D 822-2	Lateral scuttle panel with fixing plate for dashboard, left hand (replaces earlier type, see MR 4292). Until August 1961.	1
D 822-2a	Lateral scuttle panel with fixing plate for dashboard, right hand. Until August 1961.	1
DS 822-2	Lateral scuttle panel with nuts welded to upper part, left hand. Since August 1961.	1
DS 822-2a	Lateral scuttle panel with nuts welded to upper part, right hand. Since August 1961.	1
D 822-3	Scuttle panel. Until August 1961.	1
DW 822-3	Scuttle panel with welded nuts. Since August 1961.	1
D 831-1a	Pedal panel, only, without angle plate securing pressure switch. Until July 1961.	1
DF 831-1a	Pedal panel, (only). July 1961 - September 1962.	1
DS 831-1a	Pedal panel (only). Since September 1962.	1
D 853-1a	Valance for front part of caisson. Until September 1962.	1
DS 853-60	Rubber between lining and finishing panel, 80 mm long.	12
DS 853-63	Finishing panel for front part under bottom body siderail, left hand. Until September 1960.	1
DS 853-63a	Finishing panel for front part under bottom body siderail, right hand. Until September 1960.	1
DS 853-63b	Finishing panel for front part under bottom body, siderail (diamond points), left hand. Since September 1960.	1
DS 853-63c	Finishing panel for front part under bottom body siderail (diamond points), right hand. Since September 1960.	1
DS 853-84	Rubber between closing panel and front bumpers. Since September 1962.	1
DS 853-87	Lateral closing panel for finishing panel, left hand. Since September 1962.	1
DS 853-87a	Lateral closing panel for finishing panel, right hand. Since September 1962.	1
DS 853-90	Covering strip for front edge of finishing panel for front part of caisson. Until September 1962.	1
DS 853-99	Finishing panel for front part of caisson. Since September 1962.	1
DS 854-81	Finishing panel on valance of caisson front unit, left hand. Until May 1957.	1
DS 854-81a	Finishing panel on valance of caisson front unit, right hand. Until May 1957.	1
D 961-75	Lateral surround for windscreen, left hand.	1
D 961-75a	Lateral surround for windscreen, right hand.	1
D 961-80	Plug, round, 42 mm for sealing body.	2
DS 961-189	Central reinforcement for windscreen surround on scuttle dome.	1
304-S	Screw, hex. head 6 diameter 16 long securing closing panels for the front part (R. III). March 1961 - September 1962.	12
295-S	Screw, hex. head 5 diameter 16 long securing closing panel (R. III). Since September 1962.	15
482-S	Screw, hex. head 7 diameter 12.5 long securing crossmember (R.III). Since September 1962.	4
2.263-S	Screw, round head 3.5 x 15.9 securing finisher for siderail (R.VI). Since September 1962.	38
2.320-S	Nut, hex. 5 diameter 75 pitch securing closing panel (R. III). Since September 1962.	12
2.334-S	Washer, shakeproof 5.2 x 9.4 for closing panel (R. VI), Since Sept. 1962.	15
2.363-S	Washer, plain 6.5 x 14 for screws securing closing panels for the front part of the front unit (R. III). Until September 1962.	12
2.482-S	Washer 7.5 x 14 securing cross-member (R. III). Since September 1962.	4
2.514-S	Washer 7.3 x 12 securing cross-member (R. VI). Since September 1962.	4
2.582-S	Screw, P.K. 3.5 x 15 securing finishing panel under body siderail (R. VI). Until September 1962.	12
2.665-S	Screw, P.K. 5 x 16 securing closing panels for the front part of the front unit (R. VI).	4
232.932	Grommet for sealing body (R.IV).	4
615-710	Nut clips for 4.85 diameter screws securing closing panels to the front part of the front unit (R. VI). Until March 1961.	12
615.732	Nut clips, securing closing panels for the front part (R. VI). March 1961 - September 1962.	12
619.022	Washer 5 x 14 x 1 for screws securing covering strip and finishing panel (R.III). Until September 1962.	30
619.141	Washer 5.25 x 15 x 1.5 securing closing panel (R. IV). Since September 1962.	4
621.062	Screw, hex. head 5 diameter 14 long securing covering strip and finishing panel (R. III). Until September 1962.	30

The numbers underlined indicate new parts and do not appear on the illustrations.

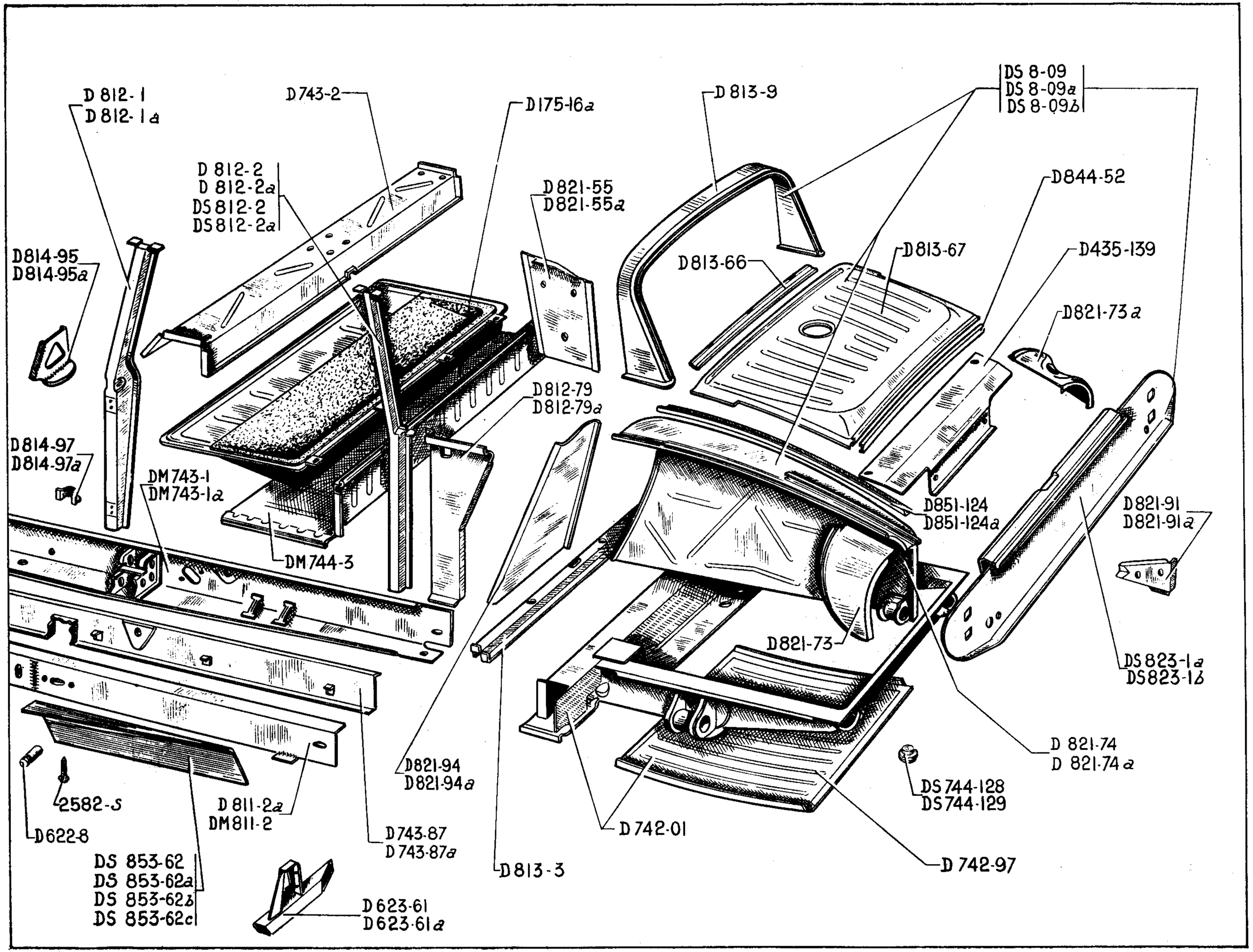
D 812-1
D 812-1a
D743-2
D175-16a
D 813-9
DS 8-09
DS 8-09a
DS 8-09b
D 812-2
D 812-2a
DS 812-2
DS 812-2a
D821-55
D821-55a
D844-52
D814-95
D814-95a
D813-66
D813-67
D435-139
D821-73a
D812-79
D812-79a
D814-97
D814-97a
DM743-1
DM743-1a
D851-124
D851-124a
D821-91
D821-91a
DM744-3
D821-73
DS 823-1a
DS 823-1b
D 821-74
D 821-74a
D821-94
D821-94a
DS 744-128
DS 744-129
2582-S
D 811-2a
DM811-2
D742-01
D743-87
D743-87a
D622-8
D 742-97
DS 853-62
DS 853-62a
DS 853-62b
DS 853-62c
D813-3
D 623-61
D 623-61a

NUMBER	DESCRIPTION	No. OFF
DS 8-09	Unit, rear for body, 2 holes 18 x 18 for wing fixing. BERLINE. Until January 1962.	1
DS 8-09a	Unit, rear for body, without support for stay. CABRIOLET.	1
DS 8-09b	Unit, rear for body, with pressing for loud-speaker 2 holes 18 x 18 for wing fixing. BERLINE. Since January 1962.	1
DM 175-16a	Cover for access to petrol tank.	1
D 435-139	Panel protecting rear height corrector control.	1
D 622-8	Eye bolt for stay anchorage.	1
D 623-61	Gusset with support tube for rear jacking, left hand. Until September 1962.	1
D 623-61a	Gusset with support tube for rear jacking, right hand. Until September 1962.	1
D 742-01	Unit, rear for caisson (rear part). Until September 1962.	1
DS 742-01	Unit, rear for caisson (rear part) with thrust plate for jack, 212 mm between centres for exhaust fixing. Since September 1962.	1
D 742-97	Floor panel for rear boot.	1
DM 743-1	Sidemember for centre unit with gusset, left hand. Until September 1962.	1
DM 743-1a	Sidemember for centre unit with gusset, right hand. Until September 1962.	1
DS 743-1	Sidemember for centre unit, interior reinforcement 1.695 m long, 1mm thick, left hand. Since September 1962.	1
DS 743-1a	Sidemember for centre unit, interior reinforcement 1.695 m long, 1mm thick, right hand. Since September 1962.	1

NUMBER	DESCRIPTION	No. OFF
D 743-2	Crossmember under seat, 1.260 m long, 416 mm wide. Until September 1962.	1
DS 743-2	Crossmember under seat, 1.260 m long, 447 mm wide Since September 1962.	1
D 743-87	Lining for centre sidemember, left hand.	1
D 743-87a	Lining for centre sidemember, right hand.	1
DS 744-2	Central floor for caisson with passage for exhaust silencer, longitudinal reinforcement 1 mm thick. Since September 1962.	1
DM 744-3	Heelboard for petrol tank. Until September 1962.	1
DS 744-3	Heelboard for petrol tank. Since September 1962.	1
DS 744-128	Plug, rubber sealing floor of rear boot.	2
DS 744-129	Plug sealing floor.	12
D 811-2a	Siderail for bottom of body, right hand.	1
DM 811-2	Siderail for bottom of body, left hand.	1
D 812-1	Centre pillar for body, left hand. BERLINE.	1
D 812-1a	Centre pillar for body, right hand. BERLINE.	1
D 812-2	Rear pillar for body, left hand. BERLINE.	1
D 812-2a	Rear pillar for body, right hand. BERLINE.	1
DS 812-2	Rear pillar for body, left hand. CABRIOLET.	1
DS 812-2a	Rear pillar for body, right hand. CABRIOLET.	1
D 812-79	Lateral closing panel, lower for rear pillar, left hand.	1

NUMBER	DESCRIPTION	No. OFF
D 812-79a	Lateral closing panel, lower for rear pillar, right hand.	1
D 813-3	Rear lower crossmember for body.	1
D 813-9	Rear upper crossmember for body.	1
D 813-66	Rear crossmember for rear window shelf.	1
D 813-67	Panel, only, for rear window shelf.	1
D 814-95	Gusset connecting front left and rear right of siderail to bottom of body.	2
D 814-95a	Gusset connecting front right and rear left of siderail to bottom of body.	2
D 814-97	Reinforcement, lower, for centre pillar, left hand.	1
D 814-97a	Reinforcement, lower, for centre pillar, right hand.	1
D 821-55	Lining for quarter panel, left hand.	1
D 821-55a	Lining for quarter panel, right hand.	1
D 821-73	Rear connecting panel, left hand.	1
D 821-73a	Rear connecting panel, right hand.	1
D 821-74	Wheelarch, left hand.	1
D 821-74a	Wheelarch, right hand.	1
D 821-91	Gusset for rear wheelarch reinforcement, left hand.	1
D 821-91a	Gusset for rear wheelarch reinforcement, right hand.	1
D 821-94	Closing panel, front, for rear wheelarch, left hand.	1
D 821-94a	Closing panel, front, for rear wheelarch, right hand.	1

The numbers underlined indicate new parts and do not appear on the illustrations.

NUMBER	DESCRIPTION	No. OFF
DS 823-1a	Closing panel, rear for rear boot, without moulding for trimming. CABRIOLET.	1
DS 823-1b	Closing panel, rear for rear boot, 2 holes 18 x 18 for wing fixing. BERLINE.	1
D 844-52	Moulding, upper for rear window shelf panel 1.18 m long.	1
D 851-124	Moulding for trimming, upper, for rear wing on wheelarch 838 mm long, left hand.	1
D 851-124a	Moulding for trimming, upper, for rear wing on wheelarch 670 mm long, right hand.	1

NUMBER	DESCRIPTION	No. OFF
DS 853-62	Finishing panel for rear part under body bottom siderail, left hand.	1
DS 853-62a	Finishing panel for rear part under body bottom siderail, right-hand.	1
DS 853-62b	Finishing panel for rear part under body bottom siderail, left-hand, (diamond points). Since September 1960.	1
DS 853-62c	Finishing panel for rear part under body bottom siderail, right hand. (diamond points). Since September 1960.	1
2.263-S	Screw, round head 3.5 x 15.9 securing finishing panel to siderail (R. VI). Since September 1962.	38

NUMBER	DESCRIPTION	No. OFF
2.582-S	Screw, P.K. 3.5 x 15 securing finishing panel to siderail (R. VI). Until September 1962.	24
2.756-S	Screw, P.K. 3 x 10 securing finishing panel to siderail (R. VI). Since September 1962.	4
88.616	Washer 4.2 x 12 x 0.8 securing finishing panel to siderail (R. III). Since September 1962.	38
89.764	Washer 5 x 10 x 1 for closing panel (R. IV). Since September 1962.	6
615.719	Nut clip for fixing front and rear fixing panel (R. VI). Since September 1962.	2

The numbers underlined indicate new parts and do not appear on the illustrations.

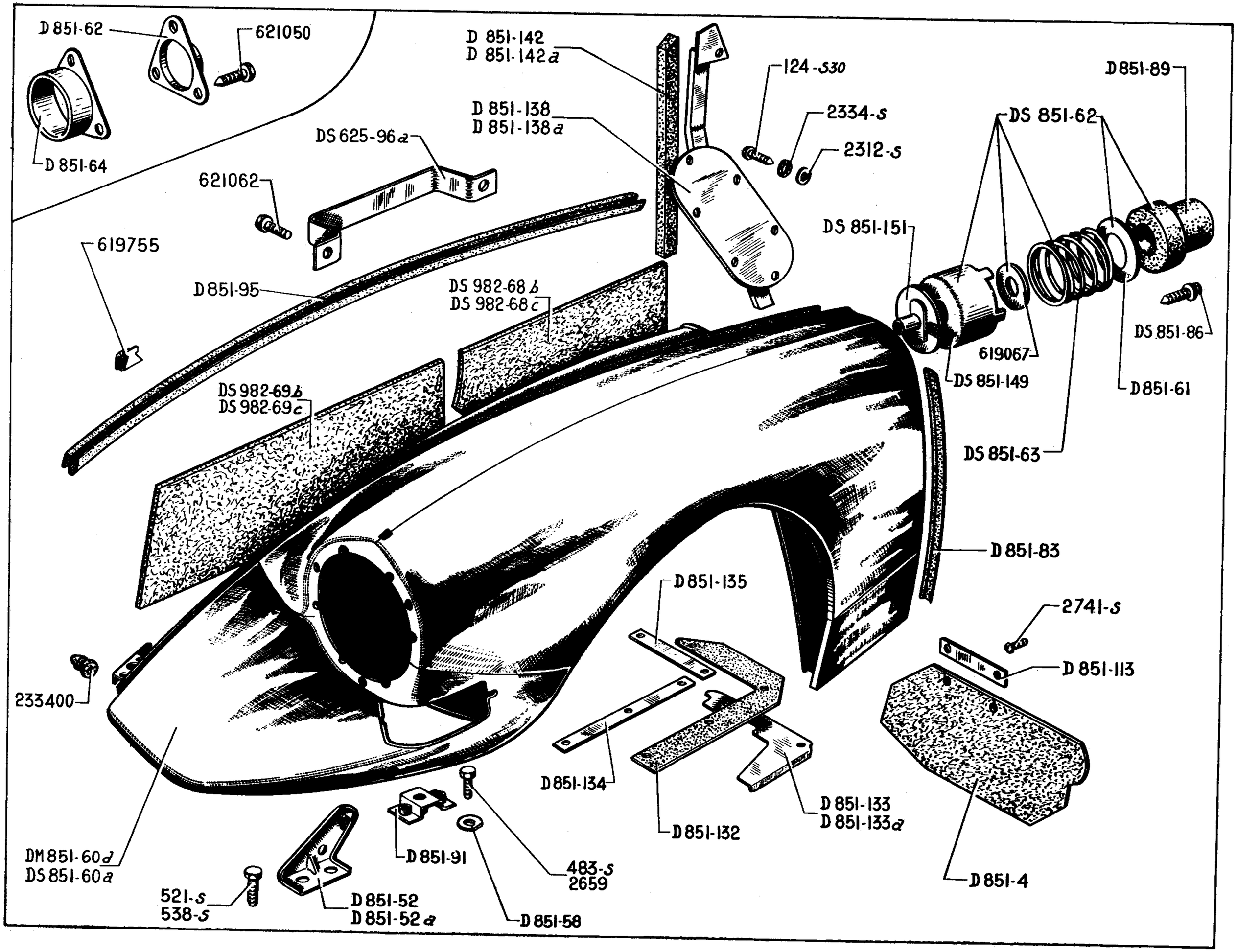
D 851-62
621050
D 851-64
D 851-142
D 851-142a
124-S30
D 851-89
D 851-138
D 851-138a
2334-S
DS 851-62
DS 625-96a
2312-S
621062
DS 851-151
619755
D 851-95
DS 982-68b
DS 982-68c
DS 851-86
619067
DS 851-149
D 851-61
DS 982-69b
DS 982-69c
DS 851-63
D 851-83
D 851-135
2741-S
D 851-113
233400
D 851-134
D 851-133
D 851-133a
D 851-132
DM 851-60d
DS 851-60a
D 851-91
483-S
2659
D 851-4
521-S
538-S
D 851-52
D 851-52a
D 851-58

NUMBER	DESCRIPTION	No. OFF
	Until September 1959	
DS 625-96a	Strap (metal) retaining oil can.	1
D 851-4	Mudflap, 160 mm long.	2
D 851-52	Support, outer securing front wing, left hand on finishing panel.	1
D 851-52a	Support, outer securing front wing, right hand on finishing panel.	1
D 851-58	Washer, 5.5 x 28 x 2 locking screw securing:-	
	- centring bracket on front wing.	12
	- bracket securing wing on front crossmember.	4
DM 851-60d	Front wing, fixing of adjustable centring support by 1 central screw, left hand.	1
DS 851-60a	Front wing, fixing of adjustable centring support by 1 central screw, right hand.	1
D 851-61	Thrust washer 25 x 44 for spigot spring on wing.	4
D 851-62	Locking plate for spigot on wing, secured by 3 screws. Until May 1958.	4
DS 851-62	Support, adjustable with rubber and spring for central spigot, fixing by 1 central screw. Since May 1958.	4
DS 851-63	Thrust spring for wing spigot, external diameter 44 mm (4 coils).	4
D 851-64	Centring socket for spigot on wing, fixing by 3 screws. Until May 1958.	4
D 851-83	Sealing strip, rubber 385 mm long.	
	- wing valance, front part.	2
	- wing valance, rear part.	2
	- lining for front part.	2
DS 851-86	Screw fixing centring support on wing, length under head 20 mm. Since May 1958.	4

NUMBER	DESCRIPTION	No. OFF
D 851-89	Rubber sleeve for centring wing positioning spigot.	4
D 851-91	Support, inner for securing front wing on crossmember.	2
D 851-95	Sealing strip, rubber, between wing and bonnet, 1.350 m long.	2
D 851-113	Plate 26 x 80 for reinforcing mudflap.	2
D 851-132	Seal, rubber, between wing and caisson 144 mm long 93 mm wide.	2
D 851-133	Support, left hand securing rubber seal between wing and caisson.	1
D 851-133a	Support, right hand securing rubber seal between wing and caisson.	1
D 851-134	Backplate securing rubber seal between wing and caisson 217 mm long.	2
D 851-135	Backplate securing rubber seal between wing and caisson 125 mm long.	2
D 851-138	Closing plate, left hand on wing.	1
D 851-138a	Closing plate, right hand on wing.	1
D 851-142	Sealing strip for wing on left hand lateral scuttle panel (R. VI).	1
D 851-142a	Sealing strip for wing on right hand lateral scuttle panel (R. VI).	1
DS 851-149	Centring support for spigot (only) on wing, fixing by 1 central screw. Since May 1958.	4
DS 851-151	Washer locking centring support on wing. Since May 1958.	1
DS 982-68b	Sealing strip, left hand, for sound deadening wing valance, rear part (R. VI).	1

NUMBER	DESCRIPTION	No. OFF
DS 982-68c	Sealing strip, right hand, for sound deadening wing valance, rear part (R. VI).	1
DS 982-69b	Sealing strip, left hand, for sound deadening wing valance, front part (R. VI).	1
DS 982-69c	Sealing strip, right hand, for sound deadening wing valance, front part (R. VI).	1
124-S-30	Screw, round head 5 diameter 12.5 long securing closing plate on wing (R. III).	14
483-S	Screw, hex. head 7 diameter 15 long wing support on finishing panel (R. III).	4
521-S	Screw, hex. head 9 diameter 16 long securing wing on front crossmember (R. III).	2
538-S	Screw, hex. head 9 diameter 25 long securing wing on reinforcement for finishing plate (R. III).	2
2.312-S	Plain washer 5.5 x 9 for screws securing closing plate on wing (R. III).	14
2.334-S	Washer, shakeproof 5.2 x 9.4 for screws securing closing plate on wing (R. VI).	14
2.659-S	Screw, hex. head 5 diameter 13 long securing wing support on cross-member (R. III).	4
2.741-S	Screw, round head for mudflap back-plate. (R. VI).	4
233.400	Sealing plug for wing (R. IV).	2
619.067	Washer 7.5 x 30 x 2 for centring support on wing (R. IV).	4
619.755	Clip securing rubber sealing strip between wing and bonnet (R. VI).	20
621.050	Screw, hex. head 5 diameter 20 long securing locking plate for spigot (R. IV). Until May 1958.	12
621.062	Screw, hex. head 5 diameter 14 long securing clamp retaining oil can (R. III).	2

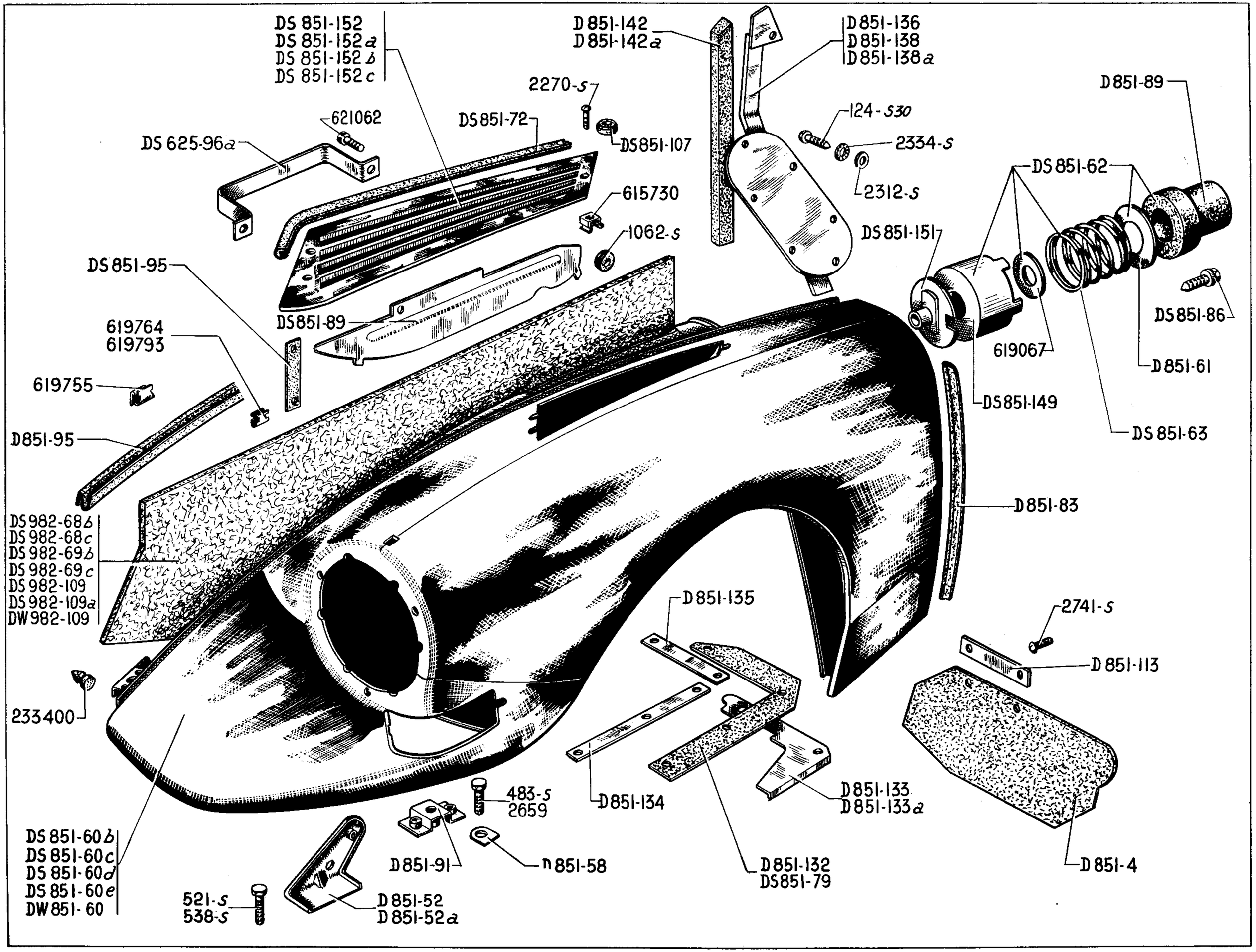
DS 851-152
DS 851-152a
DS 851-152b
DS 851-152c
D 851-142
D 851-142a
D 851-136
D 851-138
D 851-138a
2270-s
D 851-89
621062
DS 851-72
124-s30
DS 625-96a
DS851-107
2334-s
DS 851-62
615730
2312-s
1062-s
DS 851-151
DS 851-95
DS851-89
DS851-86
619764
619793
619067
D 851-61
619755
DS851-149
D851-95
DS 851-63
D 851-83
DS 982-68b
DS 982-68c
DS 982-69b
DS 982-69c
DS 982-109
DS 982-109a
DW 982-109
D 851-135
2741-s
D 851-113
233400
483-s
2659
D 851-134
D 851-133
D 851-133a
DS 851-60b
DS 851-60c
DS 851-60d
DS 851-60e
DW 851-60
D 851-91
D 851-58
D 851-132
DS851-79
D 851-4
521-s
538-s
D 851-52
D 851-52a

NUMBER	DESCRIPTION	No. OFF
	Since September 1959	
DM 443-64	Seal for passage of steering relay (R. VI). Since September 1962.	2
DM 443-65	Seal, rubber for passage of steering relay. Since September 1962.	2
DM 443-82	Front backplate securing lining, 61 mm between fixing centres. Since September 1962.	4
DM 443-84	Rear backplate securing lining, 78 mm between fixing centres. Since September 1962.	4
DS 625-1	Support for oil can. Since September 1962.	1
DS 625-96a	Strap (metal) retaining oil can. Until September 1962.	1
D 851-4	Mudflap for wing 160 mm long.	2
D 851-52	Support, external securing front wing, left hand, on finishing panel. Until September 1962.	1
D 851-52a	Support, external securing front wing, right hand, on finishing panel. Until September 1962.	1
D 851-58	Washer, 5.5 x 28 x 2 locking screw securing:	
	- centring bracket on front wing.	12
	- bracket securing wing on front crossmember. Until September 1962.	4
DS 851-60b	*Front wing, left-hand, with hole for deflector. Until May 1961. Replaced by DW 851-60.*	1
DS 851-60c	*Front wing, right-hand, with hole for deflector. Until May 1961. Replaced by DS 851-60e.*	1
DS 851-60d	*Front wing, left-hand with hole for deflector. May 1961 – August 1961. Replaced by DW 851-60.*	1

NUMBER	DESCRIPTION	No. OFF
DS 851-60e	Front wing, right hand, with hole for deflector. May 1961 - September 1962.	1
DS 851-60f	Front wing, left hand. Since September 1962.	1
DS 851-60g	Front wing, right hand. Since September 1962.	1
DW 851-60	Front wing, left hand, with hole for deflector and air inlet on wing valance. August 1961 - September 1962.	1
D 851-61	Thrust washer 25 x 44 for spigot spring on wing.	4
DS 851-62	Support, adjustable with rubber and spring for central spigot, fixing by one central screw.	4
DS 851-63	Thrust spring for wing spigot, external diameter 44 mm (4 coils).	4
DS 851-72	Surround beading for deflector grille (R. VI), by the metre. May 1961 - September 1962.	As nec.
DS 851-79	Sealing strip between front wing and caisson 234 mm long. Since February 1962.	4
D 851-83	Sealing rubber 385 mm long:	
	- front part of wing valance.	2
	- rear part of wing valance.	2
	- front part of lining.	2
DS 851-86	Screw securing centring support on wing, length under head 20 mm.	4
D 851-89	Rubber sleeve for centring wing positioning spigot.	4
DS 851-89	Screen for closing air outlet.	2
D 851-91	Support inner, securing front wing on crossmember.	2
D 851-95	Sealing rubber between wing and bonnet, 1.350 m long.	2
DS 851-95	Strap retaining closing screen (9.5 x 15 x 4).	4

NUMBER	DESCRIPTION	No. OFF
DS 851-107	Distance piece securing grille for deflector (R. VI). Since May 1961.	6
D 851-113	Plate 26 x 80 reinforcing wing mudflap.	2
D 851-132	Sealing rubber between wing and caisson, length 144 mm, width 93 mm. Until February 1962.	2
D 851-133	Support, left hand securing sealing rubber between wing and caisson. Until February 1962.	1
D 851-133a	Support, right hand securing sealing rubber between wing and caisson. Until February 1962.	1
D 851-134	Backplate securing rubber seal, between wing and caisson, length 217 mm. Until February 1962.	2
D 851-135	Backplate, securing rubber seal, between wing and caisson, length 125 mm. Until February 1962.	2
D 851-136	Closing plate on wing without support for lining. January 1960 - September 1962.	2
D 851-138	Closing plate, left hand, on wing. Until January 1960.	1
D 851-138a	Closing plate, right hand, on wing. Until January 1960.	1
DS 851-139	Sealing rubber, between wind and front bumpers, left hand (R, VI). Since September 1962.	1
DS 851-139a	Sealing rubber, between wing and front bumpers, right hand (R. VI). Since September 1962.	1
D 851-142	Wing sealing strip, on lateral scuttle panel, left hand (R. VI). Until January 1960.	1
D 851-142a	Wing sealing strip, on lateral scuttle panel, right hand (R. VI). Until January 1960.	1
DS 851-142a	Sealing strip between wing and lateral scuttle panel. Since September 1962.	2

The numbers underlined indicate new parts and do not appear on the illustrations.

NUMBER	DESCRIPTION	No. OFF
DS 851-149	Centring support (only) for spigot on wing, fixing by one central screw.	4
DS 851-151	Washer locking centring support on wing.	4
DS 851-152	Grille for deflector, left hand, 42 mm between fixing centres of the front part. Until May 1961.	1
DS 851-152a	Grille for deflector, right hand, 42 mm between fixing centres of the front part. Until May 1961.	1
DS 851-152b	Grille for deflector, left hand, 82 mm between fixing centres of the front part. May 1961 - September 1962.	1
DS 851-152c	Grille for deflector, right hand, 82 mm between fixing centres of the front part. May 1961 - September 1962.	1
DS 982-68b	Lining, left hand for sound deadening wing valance rear part (R. VI). Until September 1962.	1
DS 982-68c	Lining, right hand, for sound deadening wing valance, rear part (R. VI). Until September 1962.	1
DS 982-69b	Lining, left hand, for sound deadening wing valance, front part (R. VI). Until September 1962.	1
DS 982-69c	Lining, right hand, for sound deadening wing valance, front part (R. VI). Until September 1962.	1
DS 982-109	Lining for sound deadening wing valance, left hand. Until August 1961.	1
DS 982-109a	Lining for sound deadening wing valance, right hand. August 1961 - September 1962.	1
DW 982-109	Lining for sound deadening wing valance, left hand. August 1961 - September 1962.	1
124-S-30	Screw, round head, 5 diameter 12.5 long, securing closing plate on wing (R. III). Until September 1962.	14

NUMBER	DESCRIPTION	No. OFF
483-S	Screw, hex. head 7 diameter 15 long securing wing support on finishing panel (R. III). Until September 1962.	4
521-S	Screw, hex. head 9 diameter 16 long securing wing on front cross-member (R. III). Until September 1962.	2
530-S-30	Screw, hex. head 9 diameter 22 long securing wing on finishing panel (R. III). Since September 1962.	4
538-S	Screw, hex. head 9 diameter 25 long securing wing on reinforcement for finishing panel (R. III). Until September 1962.	2
1.062-S	Grommet for centring shield (R. III). Until September 1962.	2
2.270-S	Screw, 4 diameter 14 long, securing grille (R. VI). Until September 1962.	2
2.312-S	Washer, plain 5.5 x 9 for screws securing closing plate on wing (R. III). Until September 1962.	14
2.334-S	Washer, shakeproof 5.2 x 9.4 for screws securing closing plate on wing (R. VI). Until September 1962.	14
2.370-S	Nut, 9 diameter 125 pitch securing wing on finishing panel (R. III). Since September 1962.	4
2.389-S	Washer, shakeproof 9.5 x 16.5 securing wing on finishing panel (R. VI). Since September 1962.	4
2.659-S	Screw, hex. head 5 diameter 13 long securing wing support on cross-member (R. III). Until September 1962.	4
2.741-S	Screw, round head 4.85 x 9.5 securing backplate for wing mudflap (R. VI).	4
233.400	Sealing plug for wing side (R. IV). Until September 1962.	2
615-730	Nut, locking screw, securing grille (R. VI). Until September 1962.	6

NUMBER	DESCRIPTION	No. OFF
618.745	Rivet, securing strip on wing (R. VI). Since September 1962.	20
619.067	Washer, 7.5 x 30 x 2 for centring support for wing (R. IV).	4
619.755	Clip, for securing sealing rubber between wing and bonnet (R. VI).	28
619.764	Clip, securing sound deadening lining (R. VI). Until September 1962.	12
619.793	Clip, securing sound deadening lining (R. VI). Until September 1962.	8
619.817	Clip (R. VI). securing:	
	- rubber between wing and front bumpers.	8
	- rubber for lateral panel. Since September 1962.	18
621.062	Screw, hex. head 5 diameter 14 long securing clamp retaining oil can (R. III). Until September 1962.	2
	SPECIAL PARTS CABRIOLET	
DS 854-42	Section for bottom of body on front wing, left hand (R. VI).	1
DS 854-42a	Section for bottom of body on front wing, right hand (R. VI).	1
DS 854-45	Section for embellishment on wing angle, left hand (R. VI).	1
DS 854-45a	Section for embellishment on wing angle, right hand (R. VI).	1

The numbers underlined indicate new parts and do not appear on the illustrations.

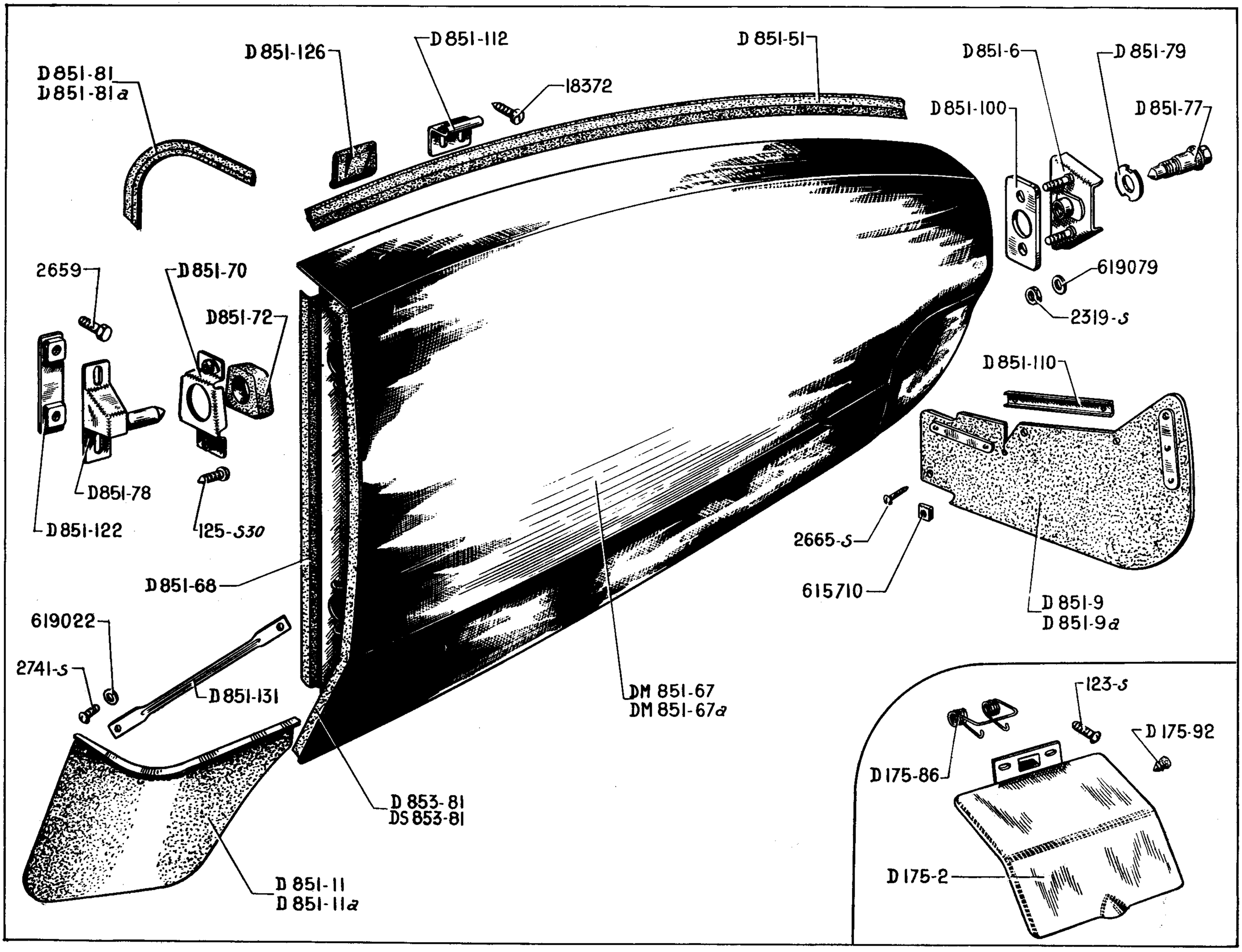
D851-81
D851-81a
D851-126
D851-112
18372
D851-51
D851-6
D851-79
D851-100
D851-77
619079
2319-s
2659
D851-70
D851-72
D851-78
D851-122
125-s30
D851-110
2665-s
615710
D851-9
D851-9a
D851-68
619022
2741-s
D851-131
DM 851-67
DM 851-67a
D853-81
DS853-81
D851-11
D851-11a
123-s
D175-92
D175-86
D175-2

NUMBER	DESCRIPTION	No. OFF
	Until July 1959	
D 175-2	Panel, hinged, covering petrol tank filler.	1
D 175-86	Spring for panel covering petrol tank filler.	1
D 175-92	Stop, rubber, for panel covering petrol tank filler (14 mm long).	2
D 851-6	Support securing wing on rear panel.	2
D 851-9	Rear wing mudflap, left-hand, 430 mm long.	1
D 851-9a	Rear wing mudflap, right-hand, 430 mm long.	1
D 851-11	Front mudflap for rear wing, left-hand, 375 mm long.	1
D 851-11a	Front mudflap for rear wing, right-hand, 375 mm long.	1
D 851-51	Upper sealing rubber for wing on wheel arch, 880 mm long.	2
DM 851-67	Rear wing, left-hand.	1
DM 851-67a	Rear wing, right-hand.	1
D 851-68	Sealing rubber on closing panel at front of wing.	2

NUMBER	DESCRIPTION	No. OFF
D 851-70	Support for centring wing (fixing on wing).	4
D 851-72	Stop, rubber 31 x 35 x 40 for centring wing spigots.	4
D 851-77	Screw securing wing, 57 mm long, length under head 47 mm.	2
D 851-78	Spigot for positioning wing.	2
D 851-79	Washer retaining screw securing wing.	2
D 851-81	Sealing rubber, left hand, between wing and panel connecting wheel-arch to rear panel.	1
D 851-81a	Sealing rubber, right hand, between wing and panel connecting wheel-arch to rear panel.	1
D 851-100	Plate securing adjustable support on rear panel 58 mm long 36 mm wide.	2
D 851-110	Reinforcement securing mudflap on rear panel, 190 mm long.	2
D 851-112	Plate securing wing at the upper rear end.	2
D 851-122	Plate securing spigot for positioning wing.	2
D 851-126	Sealing rubber for wing 25 x 40 (R. VI).	2

NUMBER	DESCRIPTION	No. OFF
D 851-131	Tie-rod for wing 178 mm long.	2
D 853-81	Rubber forming seal between wing and rear door 690 mm long. Until August 1958.	2
DS 853-81	Rubber forming seal between wing and rear door 690 mm long. Since August 1958.	2
123-S	Screw, round head 5 diameter 10 long securing petrol tank filler cover (R. III).	2
125-S-30	Screw, round head 5 diameter 15 long securing support for centring wing (R. III).	8
2.319-S	Nut, hex. 5 diameter 75 pitch locking adjustable support (R. III).	4
2.659	Screw, hex head 5 diameter 13 long securing support for wing spigot (R. III).	4
2.665-S	Screw, P.K. 5 diameter 16 long securing wing mudflap (R. VI).	4
2.741-S	Screw, round head 4.85 x 9.5 securing wing tie-rod (R. VI).	2
18.372	Screw, square head 5 diameter 12.5 long securing wing retaining plate (R. III).	4
615.710	Nut clips for 4.85 diameter screws (R. VI) securing:	
	- wing tie-rod.	2
	- wing mudflap.	6
619.022	Washer 5.5 x 14 x 1 for wing tie-rod (R. III).	4
619.079	Washer 5.5 x 12 x 2 for adjustable support (R. IV).	As nec.

NUMBER	DESCRIPTION	No. OFF
	Since July 1959	
A 615-84	Buffer, rubber, for rear wing.	2
DS 175-2a	Panel, hinged, covering petrol tank filler.	1
DS 175-86a	Spring for panel covering petrol tank filler, length 44 mm.	1
DS 175-89	Hinge pin securing cover.	1
DS 175-91	Lateral hinge for cover.	2
D 175-92	Stop, rubber, for panel covering petrol tank filler (14 mm long).	2
D 851-9	Mudflap for rear wing, left-hand, 430 mm long.	1
D 851-9a	Mudflap for rear wing, right-hand, 430 mm long.	1
D 851-11	Front mudflap for rear wing, left-hand, 375 mm long.	1
D 851-11a	Front mudflap for rear wing, right-hand, 375 mm long.	1
D 851-51	Upper sealing, rubber, for wing on wheel arch, 880 mm long.	2
DS 851-67b	Rear wing, left-hand, with hole 54 x 70, for embedded reflector.	1
DS 851-67c	Rear wing, right-hand, with hole 54 x 70, for embedded reflector.	1
D 851-68	Sealing rubber on closing panel at front of wing.	2
D 851-70	Support for centring wing (fixing on wing).	4
D 851-72	Stop, rubber, 31 x 35 x 40, for centring wing spigots.	4
DS 851-77	Screw, securing wing, length under head 21 mm.	2
D 851-78	Spigot for positioning wing.	2

NUMBER	DESCRIPTION	No. OFF
D 851-81	Sealing rubber, left-hand, between wing and panel connecting wheel arch to rear panel.	1
D 851-81a	Sealing rubber, right-hand, between wing and panel connecting wheel arch to rear panel.	1
DS 851-85	Plate securing buffer for rear wing.	2
DS 851-100a	Plate securing support for wing, 85 mm long, 50 mm wide, 2 holes 50 mm between centres.	2
D 851-110	Reinforcement securing mudflap on rear panel, 190 mm long.	2
D 851-112	Plate retaining wing at the upper rear end.	2
D 851-122	Plate securing spigot for positioning wing.	2
D 851-126	Sealing rubber for wing, 25 x 40 (R. VI).	2
D 851-131	Tie-rod for wing, 178 mm long.	2
DS 851-157	Plate securing wing, 51 mm long, 35 mm wide (1 screw and 1 nut welded).	2
DS 851-159	Support securing rear wing, 95 mm long, 50 mm wide (2 welded nuts 50 mm between centres).	2
DS 851-160	Clamp securing reflector. Except U.S.A. Until November 1961. All Types. Since November 1961.	2 2
DS 851-160a	Clamp securing reflector. U.S.A. Until November 1961.	2
DS 853-81	Rubber forming seal between wing and rear door, 690 mm long.	2
123-S	Screw, round head, 5 diameter x 10 long, securing petrol tank filler cover (R. III).	2
125-S 30	Screw, round head, 5 diameter x 15 long, securing support for centring wing (R. III).	2
2.312-S	Washer, 5.5 x 9, securing wing support (R. III).	2
2.338	Screw, hex. head, 5 diameter x 20 long, securing wing support (R. III).	4

NUMBER	DESCRIPTION	No. OFF
2.491-S	Nut, hex., 7 diameter x 100 pitch, locking wing support (R. III).	2
2.659	Screw, hex. head, 5 diameter x 13 long, securing support for wing spigot (R. III).	4
2.665-S	Screw, P.K. 5 diameter x 16 long, securing wing mudflap (R. VI).	4
2.741-S	Screw, round head, 4.85 x 9.5, securing wing tie-rod (R. VI).	2
6.278	Washer, 7.5 x 20 x 2, for adjustable support (R. IV).	2
18.372	Screw, hex. head, 5 diameter x 12.5 long, securing plate retaining wing (R. III).	4
615.710	Nut clip for 4.85 diameter screw (R. VI) securing: - wing tie-rod. - wing mudflap.	 2 6
619.022	Washer, 5.5 x 14 x 1, for wing tie-rod (R. III).	4
	SPECIAL PARTS CABRIOLET	
DS 851-03	Rear wing, left-hand.	1
DS 851-03a	Rear wing, right-hand.	1
DS 851-43	End piece for rear of rear wing, left-hand (R. VI).	1
DS 851-43a	End piece for rear of rear wing, right-hand (R. VI).	1
DS 854-43	Embellishing channel on angle of rear wing, left-hand (R. VI).	1
DS 854-43a	Embellishing channel on angle of rear wing, right-hand (R. VI).	1
DS 854-35	Block for rear wing, left-hand (R. VI).	1
DS 854-35a	Block for rear wing, right-hand (R. VI).	1

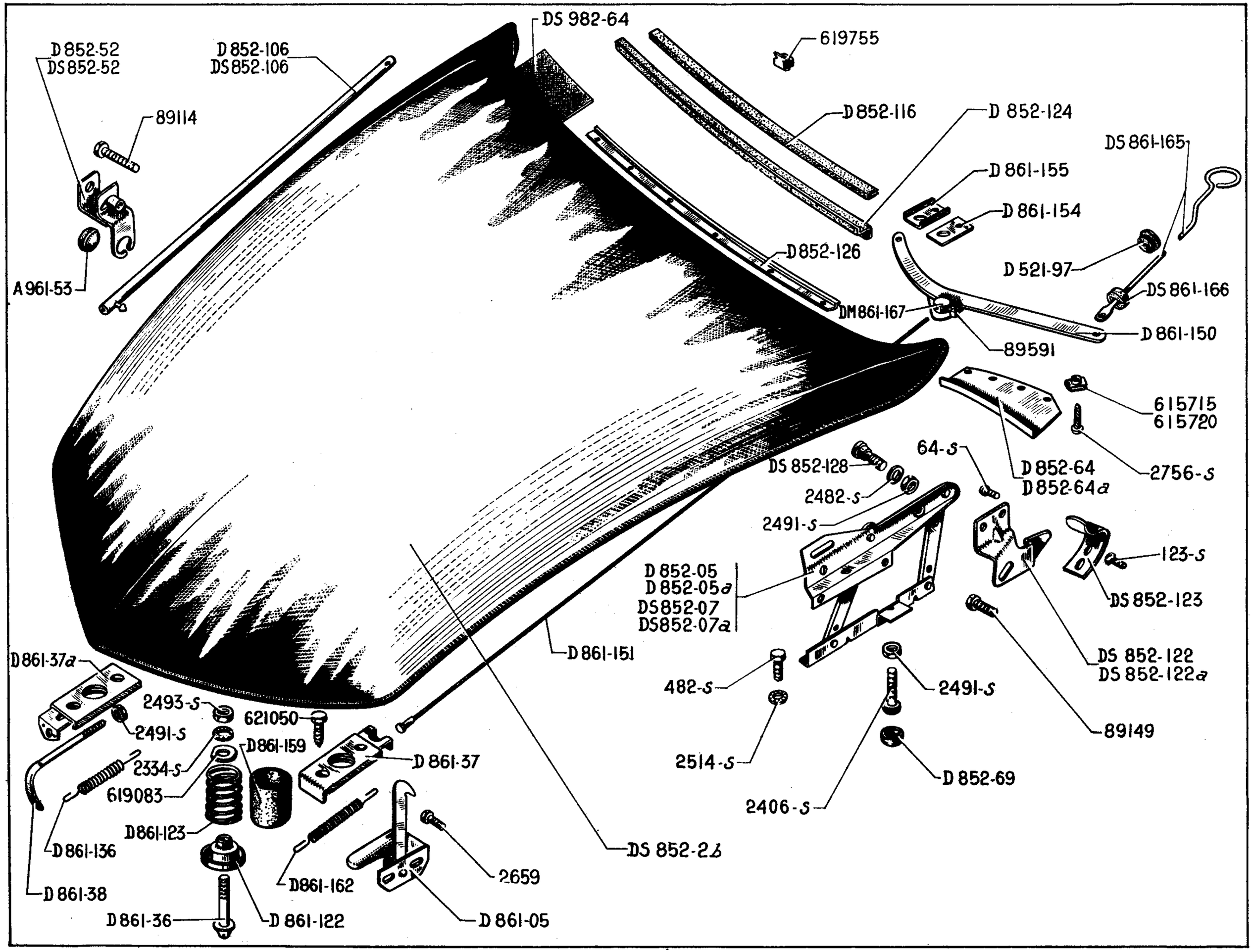
DS 982-64
619755
D 852-52
DS 852-52
D 852-106
DS 852-106
89114
D 852-116
D 852-124
DS 861-165
D 861-155
D 861-154
D 852-126
D 521-97
A 961-53
DS 861-166
DM 861-167
D 861-150
89591
615715
615720
64-S
D 852-64
D 852-64a
2756-S
DS 852-128
2482-S
2491-S
123-S
D 852-05
D 852-05a
DS 852-07
DS 852-07a
DS 852-123
D 861-151
DS 852-122
DS 852-122a
D 861-37a
482-S
2491-S
2493-S
621050
2491-S
D 861-159
89149
2334-S
D 861-37
2514-S
619083
D 852-69
2406-S
D 861-123
D 861-136
DS 852-2b
2659
D 861-162
D 861-38
D 861-36
D 861-122
D 861-05

NUMBER	DESCRIPTION	No. OFF
A 961-53	Anchor catch (rubber).	1
D 521-97	Grommet, rubber, 6 x 20 x 11, for control on dashboard.	1
D 852-05	Hinge, left-hand, 144 mm between fixing centres. Until March 1957.	1
D 852-05a	Hinge, right-hand, 144 mm between fixing centres. Until March 1957.	1
DS 852-07	Hinge, left-hand, 163 mm between fixing centres. Since March 1957.	1
DS 852-07a	Hinge, right-hand, 163 mm between fixing centres. Since March 1957.	1
DS 852-2b	Bonnet, only, securing right-hand stay. October 1957 - September 1962. Replaces earlier model; order in addition: 1-DS 182-68a, 1-DS 852-52, 1-DS 852-106.	1
DS 852-2c	Bonnet, only, without front cross-member. Since September 1962.	1
D 852-52	Anchor plate for stay, left-hand fixing. Until October 1957.	1
DS 852-52	Anchor plate for stay, right-hand fixing. Since October 1957.	1
D 852-64	Support, left-hand, for rear sealing strip.	1
D 852-64a	Support, right-hand, for rear sealing strip.	1
D 852-69	Buffer, rubber, at rear of bonnet.	2
D 852-106	Stay, 720 mm long, left-hand fixing. Until October 1957.	1

NUMBER	DESCRIPTION	No. OFF
DS 852-106	Stay, 785 mm long, right-hand fixing. Since October 1957.	1
D 852-116	Rear sealing strip, rubber, (1,500 mm long) ("U" section).	1
DS 852-122	Retaining catch, left-hand.	1
DS 852-122a	Retaining catch, right-hand.	1
DS 852-123	Hook for retaining catch.	2
D 852-124	Sealing strip, rear.	1
DS 852-126	Strip securing sealing strip, 1,390 mm long.	1
DS 852-128	Hinge pin for stay, length under head 18 mm, plain portion 9.8, threaded 7 diameter x 100 pitch.	2
D 861-05	Safety lock.	1
D 861-36	Bolt for bonnet closure, 74 mm long.	2
D 861-37	Lock for bonnet, without spring:	
	- left-hand.	1
	- right-hand.	1
	Since September 1962.	
D 861-37a	Lock, right-hand for bonnet, without spring. Until September 1962.	1
D 861-38	Control for lock, right-hand. Until September 1962.	1
D 861-122	Thrust cup, 7.5 x 40 x 12, for bonnet closure spring.	2
D 861-123	Spring for bonnet closure, 35 mm diameter.	2
D 861-136	Return spring for lock catch, right-hand. Until September 1962.	1

NUMBER	DESCRIPTION	No. OFF
D 861-150	Lever for unlocking (2 holes 3.25 mm at 223 mm between centres).	2
D 861-151	Cable connecting bonnet lock to control lever (R. VI).	2
D 861-154	Rubber pad, 22 x 39, for unlocking control. Until September 1962.	1
D 861-155	Plate securing rubber pad for unlocking control. Until September 1962.	1
D 861-159	Anti-rattle cover for bonnet closing spring (R. VI).	2
D 861-162	Return spring for locking catch, left-hand.	2
DS 861-165	Unlocking control, only. Until September 1962.	1
DS 861-165a	Unlocking control, only. Since September 1962.	2
DS 861-166	Sealing bush for unlocking control.	2
DM 861-167	Trunnion for control lever cable (R. VI).	2
DS 982-46	Front and central lining for bonnet. Since September 1962.	1
DS 982-46a	Rear lateral lining for bonnet. Since September 1962.	1
DS 982-46b	Front lateral lining for bonnet, right-hand. Since September 1962.	1
DS 982-46d	Lateral lining, left-hand. Since September 1962.	1
DS 982-64	Central sound deadening lining. Until January 1960.	1

The numbers underlined indicate new parts and do not appear on the illustrations.

NUMBER	DESCRIPTION	No. OFF
64-S	Screw, round head, 4 diameter x 12.5 long, securing retaining catch (R. III).	4
123-S	Screw, round head, 5 diameter x 10 long, securing hook for retaining catch (R. III).	4
482-S	Screw, hex. head, 7 diameter x 12.5 long, securing hinge on bonnet and front pillar (R. III).	10
2.334-S	Washer, shakeproof, 5.2 x 9.4, for lock catch spring (R. VI).	1
2.406-S	Screw, cylindrical head, 7 diameter x 25 long, securing rear buffer (R. III).	2
2.482-S	Washer, 7.5 x 14, for hinge pin (R. III).	2
2.491-S	Nut, hex. 7 diameter x 100 pitch, securing rear buffer (R. III).	2
2.493-S	Nut, hex., 7 diameter x 100 pitch, for locking bonnet closure bolt (R. III).	4
2.514-S	Washer, shakeproof, 7.3 x 12, securing hinge pin on bonnet and front pillar (R. VI).	10
2.659	Screw, hex. head, 5 diameter x 13 long, securing safety lock for bonnet (R. III).	2
2.756-S	Screw, round head, 3.5 x 9.5, securing rear sealing strip (R. VI).	10
89.114	Screw, hex. head, 5 diameter x 25 long, securing bonnet stay (R. IV).	1
89.149	Screw, hex. head, 5 diameter x 18 long, securing retaining catch (R. III).	2
89.591	Screw, square head, 4 diameter x 8 long, for cable trunnion (R. III).	2
615.715	Nut clips for 3.5 diameter screws, securing support for bonnet lining (R. VI).	10
615.720	Nut clips for 4 diameter screws securing retaining catch (R. VI).	4
619.083	Washer with flat, 7.5 x 25 x 2, for bonnet retaining catch (R. IV).	4
619.755	Clip securing rear sealing strip (R. VI).	4
621.050	Screw, hex. head, pointed, 5 diameter x 20 long, securing bonnet catch (R. IV).	4

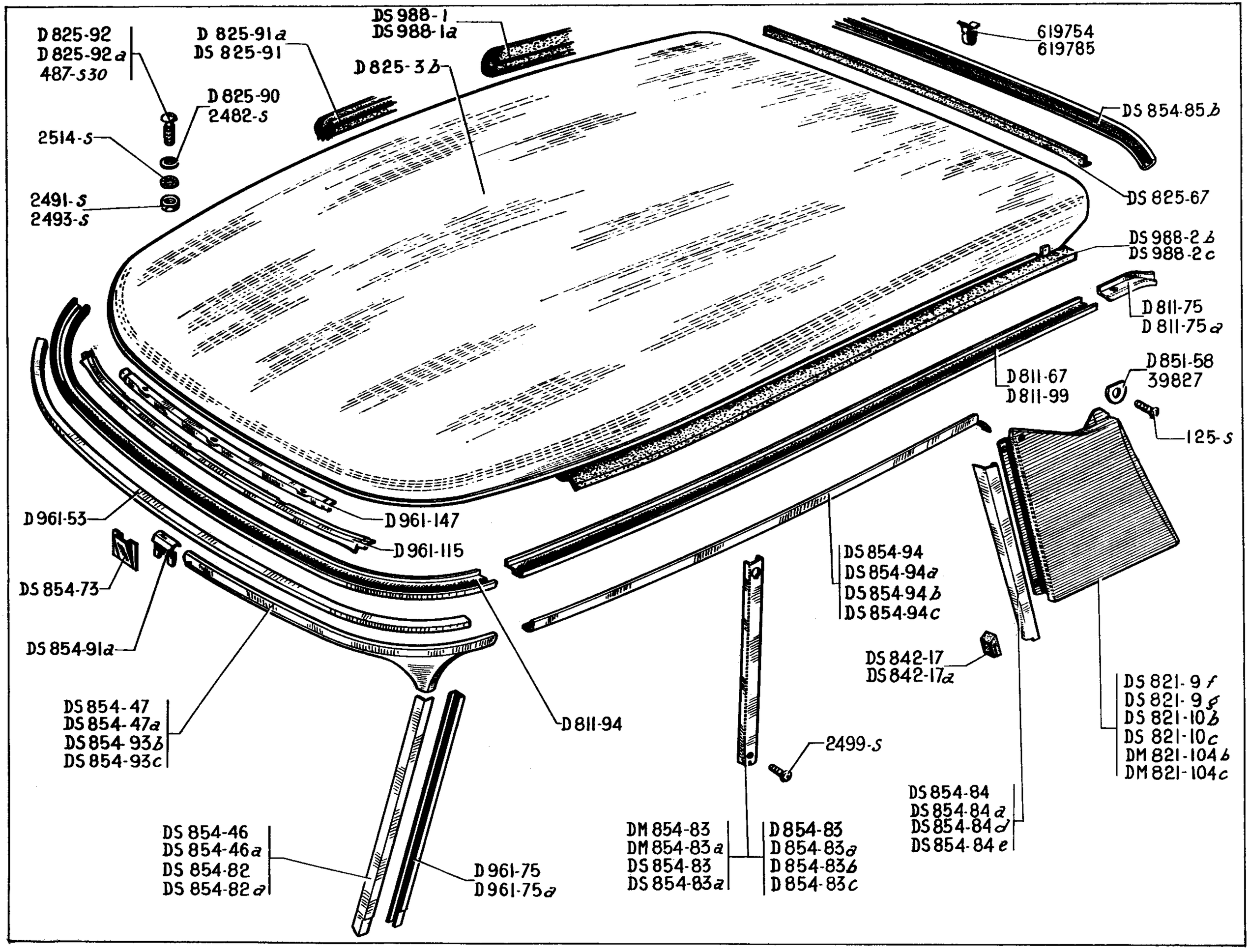
D 825-92
D 825-92a
487-S30
D 825-91a
DS 825-91
DS 988-1
DS 988-1a
D 825-3b
D 825-90
2482-S
2514-S
2491-S
2493-S
619754
619785
DS 854-85b
DS 825-67
DS 988-2b
DS 988-2c
D 811-75
D 811-75a
D 851-58
39827
D 811-67
D 811-99
125-S
D 961-53
D 961-147
D 961-115
DS 854-73
DS 854-91a
DS 854-94
DS 854-94a
DS 854-94b
DS 854-94c
DS 842-17
DS 842-17a
DS 821-9f
DS 821-9g
DS 821-10b
DS 821-10c
DM 821-104b
DM 821-104c
D 811-94
2499-S
DS 854-47
DS 854-47a
DS 854-93b
DS 854-93c
DS 854-84
DS 854-84a
DS 854-84d
DS 854-84e
DS 854-46
DS 854-46a
DS 854-82
DS 854-82a
D 961-75
D 961-75a
DM 854-83
DM 854-83a
DS 854-83
DS 854-83a
D 854-83
D 854-83a
D 854-83b
D 854-83c

NUMBER	DESCRIPTION	No. OFF
D 811-67	Cant rail for roof panel, right-hand.	1
D 811-75	Extension for roof cant rail, left-hand.	1
D 811-75a	Extension for roof cant rail, right-hand.	1
D 811-94	Cant rail for roof panel, front part.	1
D 811-99	Cant rail for roof panel, left-hand.	1
DS 821-9f	Panel for rear quarter (fluted), single plate fixing at the upper part, width of flute 6 mm, left-hand. BERLINE.	1
DS 821-9g	Panel for rear quarter (fluted), single plate fixing at the upper part, width of flute 6 mm, right-hand. BERLINE.	1
DS 821-10b	Panel for rear quarter (plain), without fixing plate at the upper part, for long chrome direction indicator, left-hand. BERLINE. Until February 1958.	1
DS 821-10c	Panel for rear quarter (plain), without fixing plate at the upper part, for long chrome direction indicator, right hand. BERLINE. Until February 1958.	1
DM 821-104b	Panel for rear quarter, left-hand (plain), single plate fixing at the upper part, for short chrome direction indicator, left-hand. BERLINE. Since February 1958. PRESTIGE. Since June 1959.	1
DM 821-104c	Panel for rear quarter (plain), single plate fixing at the upper part, for short chrome direction indicator, right-hand. BERLINE. Since February 1958. PRESTIGE. Since June 1959.	1

NUMBER	DESCRIPTION	No. OFF
D 825-3b	Roof (aluminium) with securing moulding, without lining, unpainted. Since July 1957. Replaces plastic roof, order in addition: 1-D 825-91a.	1
DS 825-67	Rear sealing strip, rubber, 1,670 mm long.	1
DS 825-75	Plate securing roof on front pillar (R. VI).	2
D 825-90	Washer with flat, 7.5 x 20, securing roof.	17
D 825-91a	Sealing strip, rubber, for aluminium roof, 4,100 mm long.	1
DS 825-91	Sealing strip, rubber, for plastic roof, 4,100 mm long.	1
D 825-92	Screw, raised head countersunk, 7 diameter x 20 long, securing roof (R. VI). Until May 1961.	12
D 825-92a	Screw, round head, slotted, with flat, 7 diameter x 25 long, securing roof.	5
DS 842-17	Buffer, rubber, between quarter panel and rear pillar, 12 mm long, left-hand. Until October 1962.	1
DS 842-17a	Buffer, rubber, between quarter panel and rear pillar, 12 mm long, right-hand. Until October 1962.	1
DS 842-17b	Buffer, rubber, between quarter panel and rear pillar, 9 mm long, left-hand. Since October 1962.	1
DS 842-17c	Buffer, rubber, between quarter panel and rear pillar, 9 mm long, right-hand. Since October 1962.	1
D 851-58	Washer, 5.5 x 28 x 2 securing quarter panel.	4
DS 854-46	Finisher, upper, for front pillar, left-hand (R. VI). CABRIOLET.	1

NUMBER	DESCRIPTION	No. OFF
DS 854-46a	Finisher, upper, for front pillar, right-hand (R. VI). CABRIOLET.	1
DS 854-47	Finisher, for upper windscreen crossmember, left-hand (R. VI). CABRIOLET.	1
DS 854-47a	Finisher, for upper windscreen crossmember, right-hand (R. VI). CABRIOLET.	1
DS 854-73	Plate securing cover joint on roof moulding.	1
DS 854-82	Finisher, upper for front pillar, left-hand. BERLINE.	1
DS 854-82a	Finisher, upper for front pillar, right-hand. BERLINE.	1
D 854-83	Finisher (fluted) for centre pillar, with hole for parking light, width of flute 6 mm, left-hand. Until August 1961.	1
D 854-83a	Finisher (fluted), for centre pillar, with hole for parking light, width of flute 6 mm, right-hand. Until August 1961.	1
D 854-83b	Finisher (plain), for centre pillar, left-hand. BERLINE. February 1958 - August 1961. PRESTIGE. June 1959 - August 1961.	1
D 854-83c	Finisher (plain), for centre pillar, right-hand. BERLINE. February 1958 - August 1961. PRESTIGE. June 1959 - August 1961.	1
DM 854-83	Finisher (plain) for centre pillar, without hole for parking light, left-hand. Since August 1961.	1

The numbers underlined indicate new parts and do not appear on the illustrations.

NUMBER	DESCRIPTION	No. OFF
DM 854-83a	Finisher (plain) for centre pillar, without hole for parking light, right hand. Since August 1961.	1
DM 854-83f	Finisher (fluted aluminium) without hole for parking light, width of flute 3 mm, left hand. Since February 1962.	1
DM 854-83g	Finisher (fluted aluminium) without hole for parking light, width of flute 3 mm, right hand. Since February 1962.	1
DS 854-83	Finisher (fluted) for centre pillar, without hole for parking light, width of flute 6 mm, left hand. U.S.A. ALL TYPES August 1961 - February 1962.	1
DS 854-83a	Finisher (fluted) for centre pillar, without hole for parking light, width of flute 6 mm, right hand. U.S.A. ALL TYPES August 1961 - February 1962.	1
DS 854-84	Finisher, upper for rear pillar, for direction indicator light (plastic) left hand. Until September 1959.	1
DS 854-84a	Finisher, upper for rear pillar, for direction indicator light (plastic), right hand. Until September 1959.	1
DS 854-84d	Finisher, upper for rear pillar, left hand. Since September 1959.	1
DS 854-84e	Finisher, upper for rear pillar, right hand. Since September 1959.	1
DS 854-85b	Rear finishing moulding for roof, for short chrome direction indicator, length 1.140 m.	1

NUMBER	DESCRIPTION	No. OFF
DS 854-91a	Cover joint for finishing moulding at front of roof.	1
DS 854-93b	Finishing moulding for front of roof, left-hand. BERLINE.	1
DS 854-93c	Finishing moulding for front of roof, right-hand. BERLINE.	1
DS 854-94	Finishing moulding lateral for siderail, for direction indicator light, (short plastic), left-hand. Until September 1959.	1
DS 854-94a	Finishing moulding, lateral for siderail, for direction indicator light, (short plastic) right-hand. Until September 1959.	1
DS 854-94b	Finishing moulding lateral for siderail, for direction indicator light, (short chrome), left-hand. Since February 1958.	1
DS 854-94c	Finishing moulding lateral for siderail, for direction indicator light, (short chrome), right-hand. Since February 1958.	1
D 961-53	Surround (metal), upper, for windscreen.	1
D 961-75	Surround (metal), lateral, for windscreen, left-hand.	1
D 961-75a	Surround (metal), lateral, for windscreen, right-hand.	1
D 961-115	Reinforcement, central, for windscreen surround (exterior part).	1
D 961-147	Reinforcement, central, for windscreen surround (interior part).	1
DS 988-1	Rubber finishing strip, inner, (grey), for roof, length 3.850 m.	1

NUMBER	DESCRIPTION	No. OFF
DS 988-1a	Rubber finishing strip (beige) for roof, length 3.850 m.	1
DS 988-2b	Sound deadening lining with roof fabric (grey).	1
DS 988-2c	Sound deadening lining with roof fabric (beige).	1
125-S	Screw, round head, 5 diameter 15 long securing quarter panel (R. III).	2
487-S-30	Screw, hex. head, 7 diameter 25 long securing roof (R. III). Since May 1961.	12
2.482-S	Washer 7.5 x 14 for screws securing roof (R. III).	5
2.491-S	Nut, hex. 7 diameter 100 pitch, locking screws securing roof (R. III).	3
2.493-S	Nut, hex. 7 diameter 100 pitch, locking screws securing roof. (R. III).	2
2.499-S	Screw, raised head countersunk 3.52 x 9.5 (R. III) securing:	
	- quarter panel.	6
	- front and centre finisher.	4
2.514-S	Washer, shakeproof 7.3 x 12 for screws securing roof (R. VI). Until May 1961.	5
39.827	Washer, 5 x 20 x 2 securing quarter panel (R. IV).	As nec.
619.754	Clip securing rear finishing strip for roof (plastic) (R. VI).	7
619.785	Clip securing rear finishing strip for roof (aluminium) (R.VI).	7

The numbers underlined indicate new parts and do not appear on the illustrations.

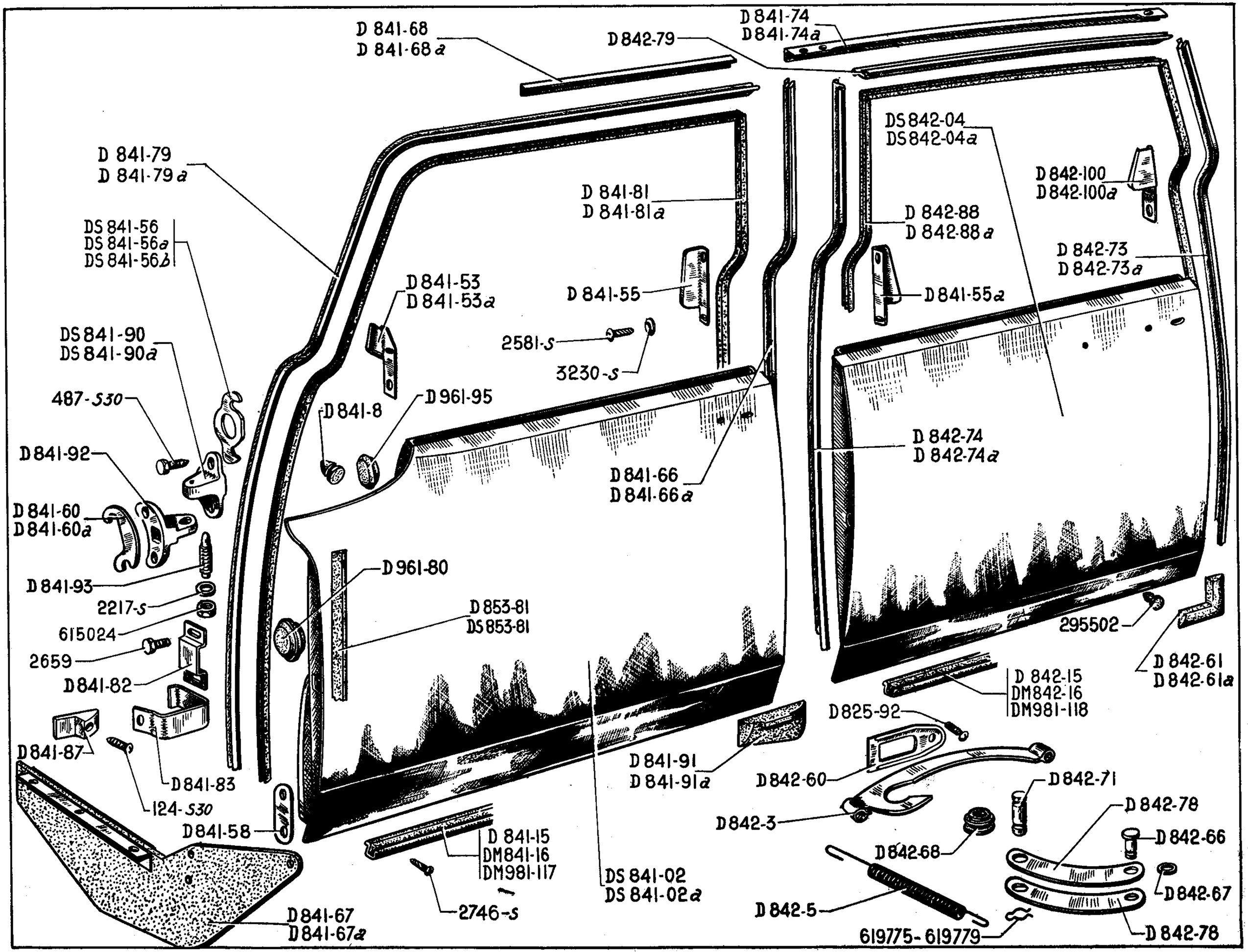
D 841-68
D 841-68a
D 842-79
D 841-74
D 841-74a
D 841-79
D 841-79a
DS 841-56
DS 841-56a
DS 841-56b
D 841-81
D 841-81a
DS 842-04
DS 842-04a
D 842-100
D 842-100a
D 842-88
D 842-88a
D 842-73
D 842-73a
D 841-53
D 841-53a
D 841-55
D 841-55a
2581-S
3230-S
DS 841-90
DS 841-90a
487-S30
D 841-8
D 961-95
D 842-74
D 842-74a
D 841-92
D 841-66
D 841-66a
D 841-60
D 841-60a
D 961-80
D 841-93
2217-S
615024
D 853-81
DS 853-81
295502
2659
D 842-61
D 842-61a
D 841-82
D 842-15
DM842-16
DM981-118
D 825-92
D 841-87
D 841-91
D 841-91a
D 842-60
D 842-71
D 841-83
124-S30
D 842-78
D 842-3
D 841-58
D 842-66
D 841-15
DM841-16
DM981-117
D 842-68
DS 841-02
DS 841-02a
D 842-67
2746-S
D 842-5
D 841-67
D 841-67a
619775-619779
D 842-78

NUMBER	DESCRIPTION	No. OFF
D 825-92	Screw, raised head countersunk 7 diameter 20 long securing plate for door check strap (R. VI).	4
DS 841-02	Front door, left hand, without lock or window winder.	1
DS 841-02a	Front door, right hand, without lock or window winder.	1
D 841-8	Flexible buffer for door opening, length 31.5 mm diameter 30 mm.	2
D 841-15	Sealing rubber lower for door, 950 mm long.	2
DM 841-16	Sealing strip for bottom of front door (R. VI). U.S.A.	2
D 841-53	Plate securing sealing for door entrance, on front pillar, left hand. Until February 1958.	1
D 841-53a	Plate securing sealing for door entrance, on front pillar, right hand. Until February 1958.	1
D 841-55	Plate securing front, left hand and rear, right hand sealing strip for door entrance on centre pillar. Until February 1958.	2
D 841-55a	Plate securing front, right hand and rear, left hand sealing strip for door entrance on centre pillar. Until February 1958.	2
DS 841-56	Adjusting plate 66 x 3.5 x 0.5 for pivot screw bracket.	As nec.
DS 841-56a	Adjusting plate 66 x 3.5 x 1 for pivot screw bracket.	As nec.
DS 841-56b	Adjusting plate 66 x 3.5 x 1.5 for pivot screw bracket.	As nec.

NUMBER	DESCRIPTION	No. OFF
D 841-58	Plate 26 x 90 securing sealing strip on front pillar, 2 holes 5 mm diameter at 60 mm between centres.	2
D 841-60	Adjusting plate 41 x 63 x 1 for pivot screw bracket.	As nec.
D 841-60a	Adjusting plate 41 x 63 x 2 for pivot screw bracket.	As nec.
D 841-66	Sealing strip for front door entrance, left hand (for centre pillar).	1
D 841-66a	Sealing strip for front door entrance, right hand (for centre pillar).	1
D 841-67	Sealing strip, lower, between front door and front wing, left hand.	1
D 841-67a	Sealing strip, lower, between front door and front wing, right hand.	1
D 841-68	Reinforcement, upper, for front door entrance, left hand.	1
D 841-68a	Reinforcement, upper, for front door entrance, right hand.	1
D 841-74	Reinforcement, upper, for rear door entrance, left hand.	1
D 841-74a	Reinforcement, upper, for rear door entrance, right hand.	1
D 841-79	Sealing strip for front door entrance, left hand (for roof siderail and front pillar).	1
D 841-79a	Sealing strip for front door entrance, right hand (for roof siderail and front pillar).	1

NUMBER	DESCRIPTION	No. OFF
D 841-81	Sealing strip for front door entrance, left hand.	1
D 841-81a	Sealing strip for front door entrance, right hand.	1
D 841-82	Flange securing door stop spring.	2
D 841-83	Door stop spring (open position).	2
D 841-87	Stop for front door, length 46 mm 2 dowels at 36 mm between centres (R. VI).	2
D 841-90	Support, cupped, upper left hand and lower right hand for door hinge pin (50 mm between fixing centres).	4
DS 841-90a	Support, cupped, lower left hand and upper right hand for door hinge pin (50 mm between fixing centres).	4
D 841-91	Sealing strip, lower, between front door left hand and centre pillar.	1
D 841-91a	Sealing strip, lower, between front door right hand and centre pillar.	1
D 841-92	Support for hinge pin screw, 42 mm between fixing centres.	8
D 841-93	Screw, 9 diameter 45 long for door hinge pin adjustment.	8
DS 842-04	Rear door, left hand, without lock or window winder.	1
DS 842-04a	Rear door, right hand, without lock, or window winder.	1
D 842-3	Check strap for door (195 mm between fixing centres).	2
D 842-5	Spring, compensating, for door check strap, 270 mm long.	4

NUMBER	DESCRIPTION	No. OFF
D 842-15	Sealing strip, rubber, lower for door, 850 mm long.	2
DM 842-16	Sealing strip for bottom of rear door (R. VI). U.S.A.	2
D 842-60	Securing plate for passage of check strap on rear door.	2
D 842-61	Sealing strip, lower, between door and rear pillar, left-hand.	1
D 842-61a	Sealing strip, lower, between door and rear pillar, right-hand.	1
D 842-66	Pivot pin for door check strap link, 7 mm diameter, length under head 18 mm, 1 groove at 14.5 mm.	2
D 842-67	Washer, 7.5 x 15 x 3, for door check strap link.	2
D 842-68	Roller for door check strap (R. VI).	2
D 842-71	Spindle for roller and for attaching door check strap spring, 10 mm diameter, length 37 mm,distance between centres of grooves 20 mm and 28.5 mm.	4
D 842-73	Strip securing seal for rear door entrance, left-hand (for rear pillar).	1
D 842-73a	Strip securing seal for rear door entrance, right-hand (for rear pillar).	1
D 842-74	Strip securing seal for rear door entrance, left-hand (for centre pillar).	1
D 842-74a	Strip securing seal for rear door entrance, right-hand (for centre pillar).	1

NUMBER	DESCRIPTION	No. OFF
D 842-78	Link for door check strap, distance between fixing centres 127.5 mm.	4
D 842-79	Strip, upper, for sealing strip for rear door entrance (for roof side-rail).	2
D 842-88	Sealing strip for door entrance, left-hand.	1
D 842-88a	Sealing strip for door entrance, right-hand.	1
D 842-100	Plate retaining strip for door entrance and rear pillar, left-hand. Until February 1958.	1
D 842-100a	Plate retaining strip for door entrance and rear pillar, right-hand. Until February 1958.	1
D 853-81	Rubber seal for door. Until July 1958.	4
DS 853-81	Rubber sealing strip with wired rubber. Since July 1958.	4
D 961-80	Plug, round, 42 mm for lower hole for adjusting window channel.	8
D 961-95	Plug, oval, 40 mm for upper hole for adjusting window channel.	8
DM 981-117	Sealing strip frame for bottom of front door. U.S.A.	2
DM 981-118	Sealing strip frame for bottom of rear door. U.S.A.	2
124-S 30	Screw, round head, 5 diameter x 12.5 long, securing flexible buffer (R. III).	2

NUMBER	DESCRIPTION	No. OFF
487-S 30	Screw, hex. head, 7 diameter x 25 long, securing door hinge pin support (R. III).	32
2.217-S	Plain washer, 9.5 x 16 x 2, for screw adjusting hinge pin (R. III).	8
2.581-S	Screw, P.K. 3.5 x 10 fixing plate retaining lining on centre pillar (R. VI).	12
2.659	Screw, hex. head, 5 diameter x 13 long, securing flange for stop spring (R. III).	4
2.746-S	Screw, P.K. round head, 4.85 x 16, securing lower lining (R. VI).	8
3.230-S	Washer, cupped, 3.5 mm diameter for screws of plate retaining lining on centre pillar (R. VI).	12
295.502	Rubber stop for closing of door on centre pillar and rear pillar (R. IV).	6
615.024	Nut, hex., 9 diameter x 125 pitch, for screw adjusting hinge pin (R. IV).	8
619.775	Spring clip securing roller spindle for door check strap, 20 mm long (R. VI).	4
619.779	Spring clip securing pivot in door check strap, 14.5 mm long (R.IV).	2

NUMBER	DESCRIPTION	No. OFF
	SPECIAL PARTS CABRIOLET	
DS 854-31	Tread plate (inox), left hand (R. VI).	1
DS 854-31a	Tread plate (inox), right hand (R. VI).	1
DS 841-11	Hinge, lower for door, left hand (R. VI).	1
DS 841-11a	Hinge, lower for door, right hand (R. VI).	1
DS 854-34	Lining for bottom of door (fluted aluminium), left hand (R. VI).	1
DS 854-34a	Lining for bottom of door (fluted aluminium), right hand (R. VI).	1
DS 841-13	Door, only, left-hand (R. VI).	1
DS 841-13a	Door, only, right-hand (R. VI).	1
DS 841-68	Sealing moulding for door (R. VI).	2
DS 854-30	Finisher for tread plate (R. VI).	2
DS 854-33	Interior upper moulding for door (R. VI).	2
DS 854-33a	Interior lower moulding for door (R. VI).	2
DS 854-40	Upper moulding between door and bonnet, left-hand (R. VI).	1
DS 854-40a	Upper moulding between door and bonnet, right-hand (R. VI).	1
DS 854-41	Embellisher for bottom of body, left-hand (R. VI).	1
DS 854-41a	Embellisher for bottom of body, right-hand (R. VI).	1
DS 854-44	Embellisher on angle of door, left-hand (R. VI).	1
DS 854-44a	Embellisher on angle of door, right-hand (R. VI).	1
DS 854-32	Finishing panel for siderail (fluted aluminium), left-hand (R. VI).	1
DS 854-32a	Finishing panel for siderail (fluted aluminium), right-hand (R. VI).	1
DS 981-49	Lining for door entrance (R. VI).	2
	PRESTIGE	
D 854-95	Sealing moulding for front door (R. VI).	2
D 854-96	Sealing moulding for rear door (R. VI).	2

NUMBER	DESCRIPTION	No. OFF
	SPECIAL PARTS CABRIOLET	
DS 961-79	Door glass channel, left hand (R. VI).	1
DS 961-79a	Door glass channel, right hand (R. VI).	1
DS 961-30c	Sealing strip, outer for glass (R. VI).	2
DS 961-48	Sealing strip, inner for glass, left hand (R. VI).	1
DS 961-48a	Sealing strip, inner for glass, right hand (R. VI).	1
DS 961-4d	Glass for door, 6 mm thick (R. Vi).	2

NUMBER	DESCRIPTION	No. OFF
	SPECIAL PARTS PRESTIGE	
D 826-94	Frame for partition with sliding glass and lining (R. VI).	1
D 854-56	Rod securing moquette on centre pillar (R. VI).	2
D 854-57	Rod securing moquette on centre pillar (R. VI).	2
D 853-105	Beading, upper, rear, for partition (R. VI).	1
D 853-106	Beading, upper, front, for partition (R. VI).	1
D 961-49	Glass channel for partition (R. VI).	1
D 961-113	Guide slide for glass (R. VI).	2
D 826-52	Nut "Champion" securing frame (R. VI).	As nec.
D 944-98	Escutcheon, lower, for handle mounting (R. VI).	2
D 944-99	Escutcheon, upper, for handle mounting (R. VI).	2
D 961-100	Escutcheon for handle (R. VI).	1
D 961-48	Wiper for glass (R. VI).	1
D 853-63	Surround for partition (not trimmed) (R. VI).	1
D 854-81	Ventilation grille, rear (R. VI).	2
D 853-56	Lining, lower, rear, for centre pillar with nozzle, left-hand (R. VI).	1
D 853-59	Lining, lower, rear, for centre pillar with nozzle, right-hand (R. VI).	1
D 853-60	Lining, upper, rear, for centre pillar, left-hand (R. VI).	1
D 853-62	Lining, upper, rear, for centre pillar, right-hand (R. VI).	1
D 853-107	Lining, front, for centre pillar, left-hand (R. VI).	1
D 853-108	Lining, front, for centre pillar, right-hand (R. VI).	1
D 961-2	Glass for partition (R. VI).	1
D 961-016	Window winder for partition (R. VI).	1
D 961-36	Handle for partition window winder (R. VI).	1
D 853-110	Panel, rear, for partition, moquette trimmed (R. VI).	1
D 826-95	Plate securing frame, left-hand (R. VI).	1
D 826-95a	Plate securing frame, right-hand (R. VI).	1
D 944-1	Handle mounting, trimmed, left-hand (R. VI).	1
D 944-1a	Handle mounting, trimmed, right-hand (R. VI).	1
D 854-95	Sealing moulding for front door (R. VI).	2
D 854-96	Sealing moulding for rear door (R. VI).	2
D 961-179	Spring for escutcheon (R. VI).	1
D 961-83	Slide for glass (R. VI).	1
D 813-92	Centre crossmember for partition (with leathercloth and glass wiper) (R. VI).	1
D 813-96	Crossmember, lower, for frame (with felt buffers) (R. VI).	1

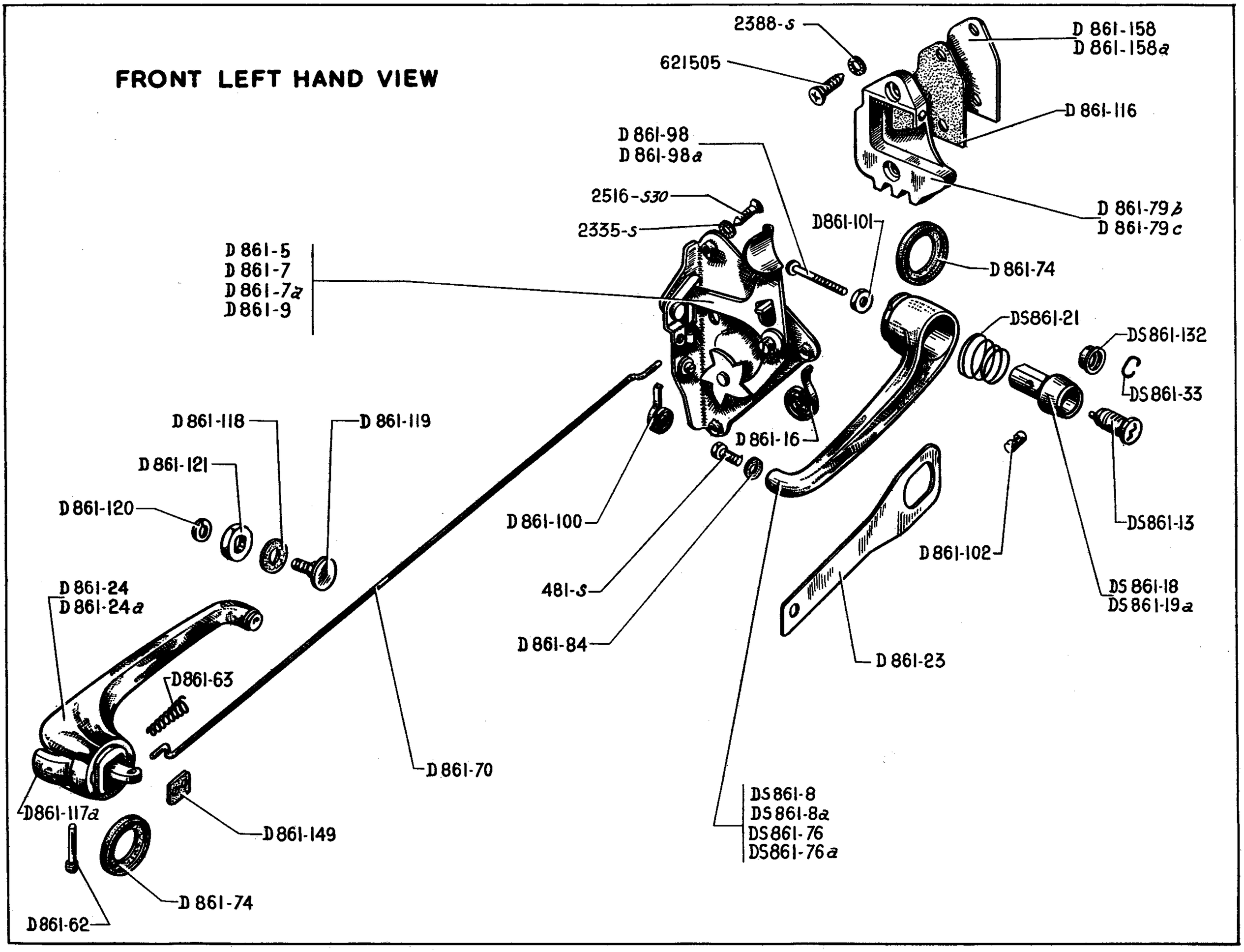
FRONT LEFT HAND VIEW
2388-s
621505
D 861-158
D 861-158a
D 861-116
D 861-98
D 861-98a
2516-s30
2335-s
D861-101
D 861-79b
D 861-79c
D 861-5
D 861-7
D 861-7a
D 861-9
D 861-74
DS861-21
DS861-132
DS861-33
D 861-118
D 861-119
D 861-121
D 861-120
D 861-16
D 861-100
DS861-13
D 861-102
481-s
DS 861-18
DS 861-19a
D 861-84
D 861-23
D 861-24
D 861-24a
D861-63
D 861-70
D861-117a
D 861-149
DS 861-8
DS 861-8a
DS 861-76
DS861-76a
D 861-74
D861-62

NUMBER	DESCRIPTION	No. OFF
D 861-5	Lock for front door, right-hand with safety catch (R. VI).	1
D 861-7	Lock for door with lock catch (R. VI). - front, left-hand. Until May 1956. - rear, left-hand.	1
D 861-7a	Lock for front door, left-hand, with safety catch (R. VI). Since May 1956.	1
DS 861-8	Handle, exterior for rear door, left-hand.	1
DS 861-8a	Handle, exterior for rear door, right-hand.	1
D 861-9	Lock for rear door, right-hand with lock catch (R. VI).	1
D 861-13	Set of 4 lock barrels with 5 wards for front door, left and right-hand, for rear boot and ignition switch. (R. VI). Since July 1959. Replaces earlier types; order in addition: 3-DS 861-18 (R. VI), 3-DS 861-132 (R. VI).	1
D 861-16	Return spring for door lock lever (R. VI).	4
DS 861-18	Push-button for 5 ward lock barrels for front doors (R. VI). Since July 1959. Replaces earlier types; order in addition: 1-DS 861-132 (R. VI).	2
DS 861-19a	Push-button for rear doors.	2
DS 861-21	Return spring for push-button in door handle.	4
D 861-23	Locking plate securing exterior handle, 178 mm long, one slot 24.5 mm, one hole 7.5 mm diameter.	4

NUMBER	DESCRIPTION	No. OFF
D 861-24	Handle, interior for left-hand door.	2
D 861-24a	Handle, interior for right-hand door.	2
DS 861-33	Circlip for lock barrel (R. VI).	1
D 861-62	Pin for safety catch for interior handle.	4
D 861-63	Return spring for safety lock tongue for interior handle.	4
D 861-70	Connecting rod for remote control, 700 mm long.	4
D 861-74	Washer, rubber, 25 x 42, with shoulder for external and inside handle.	8
DS 861-76	Handle, external (only) for front and rear left-hand doors (R. VI). Since October 1959. Replaces earlier type; order in addition: 1-DS 861-132 (R. VI).	2
DS 861-76a	Handle, external (only), for front and rear right-hand doors (R. VI). Since October 1959. Replaces earlier type; order in addition: 1-DS 861-132 (R. VI).	2
D 861-79b	Striking plate for front and rear left-hand doors, distance between fixing centres 48 mm, (3 teeth) (R. VI).	2
D 861-79c	Striking plate for front and rear right-hand doors, distance between fixing centres 48 mm, (3 teeth) (R. VI).	2
D 861-84	Washer, fibre, 7.5 x 17 x 1, for securing rear of external handle (R. VI).	4
D 861-98	Screw for adjusting push-button of front door handle, length under head 16 mm.	2
D 861-98a	Screw for adjusting push-button of rear door, length under head 51 mm.	2

NUMBER	DESCRIPTION	No. OFF
D 861-100	Spring for locking catch (R. VI).	4
D 861-101	Nut, hex., 5 diameter x 75 pitch, locking adjusting screw for door handle push-button.	4
D 861-102	Locking pin for front door handle (R. VI).	2
D 861-116	Plate for door striking plate on centre and rear pillars, distance between fixing centres 48 mm (R. VI).	4
D 861-117a	Tongue (chrome) for safety catch on interior handle.	4
D 861-118	Washer, fibre, 10.5 x 26 x 1, securing rear of inner handle (R. VI).	4
D 861-119	Screw, securing inner handle, 14 mm long, head diameter 24 mm.	4
D 861-120	Washer, 6.4 x 15, for screw securing inner door handle (R. VI).	4
D 861-121	Locking collar for inner door handle.	4
DS 861-132	Cup retaining push-button (R. VI). Since July 1959.	4
D 861-149	Anti-rattle plate, 13 x 18, for connecting rod of remote control.	8
D 861-158	Plate for adjusting striking plate on front and rear doors, 2 mm thick (R. VI).	As nec.
D 861-158a	Plate for adjusting striking plate on front and rear doors, 3 mm thick (R. VI).	As nec.
481-S	Screw, hex. head, 7 diameter x 10 long, securing exterior door handle (R. III).	2
2.335-S	Washer, shakeproof, 5.2 for screw securing handle (R. VI).	12
2.388-S	Washer, shakeproof, 7.2 x 14 x 0.35, securing striking plate (R. VI).	8
2.516-S 30	Screw, round head countersunk, 5 diameter x 12.5 long, securing lock (R. VI).	12
621.505	Screw, round head, 7 diameter x 24 long, securing door striking plate (R. VI).	8

280-WINDOW WINDER

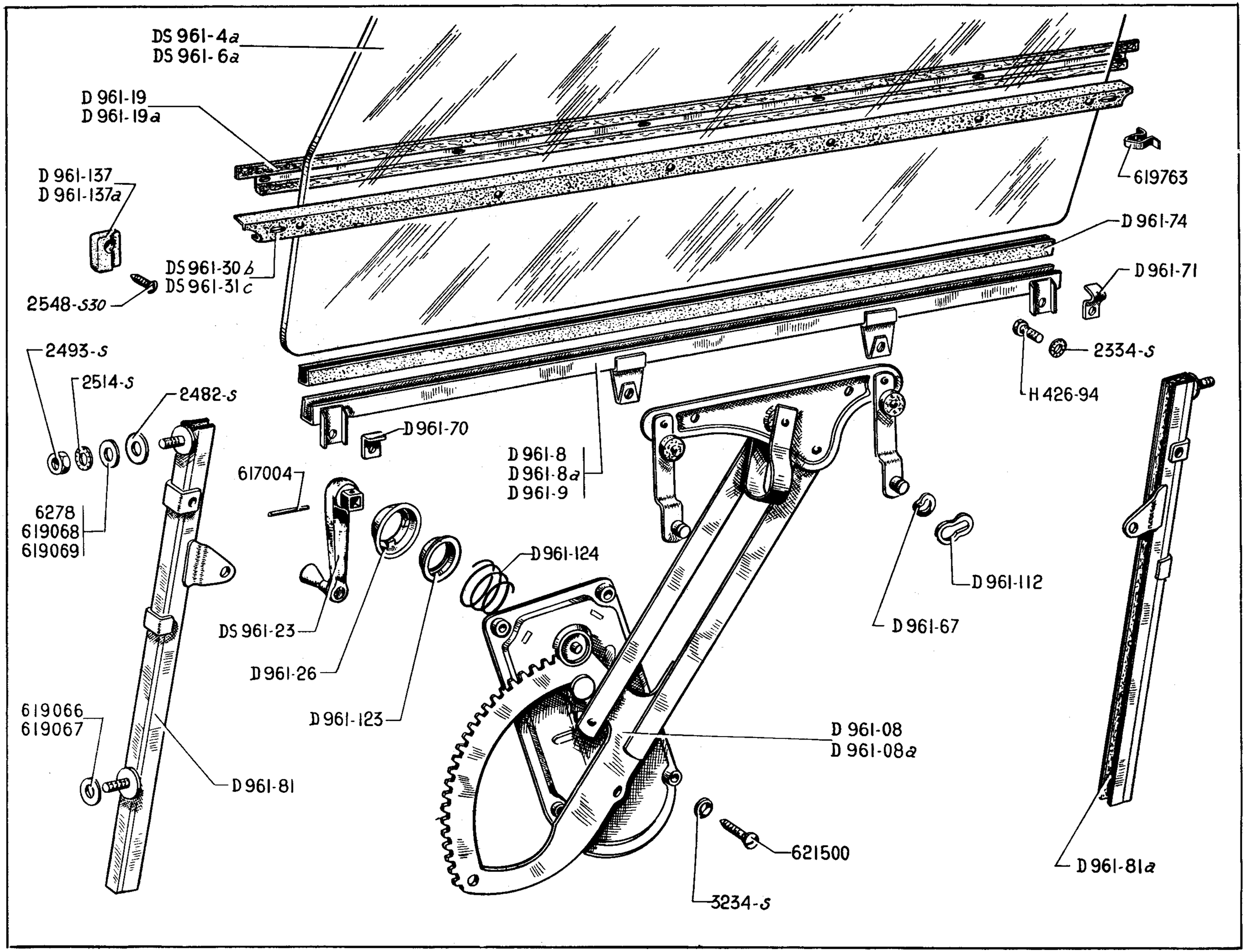

NUMBER	DESCRIPTION	No. OFF
	ARRANGEMENT GLASS THICKNESS 6 mm. Until May 1957	
D 961-08	Window winder "Dura" 2 arm for left-hand door (R. VI).	2
D 961-08a	Window winder "Dura" 2 arm for right-hand door (R. VI).	2
DS 961-4a	*Glass for front door (R. VI). Replaced by DS 961-4c; order in addition: 1-DS 961-81, DS 961-81a, 1-DS 961-74b, 1-DS 961-175d (R. VI), 1-DS 961-175e (R. VI).*	2
DS 961-6a	*Glass for rear door (R. VI). Replaced by DS 961-6b.*	2
D 961-8	Channel for front door glass, left-hand, 698 mm long.	1
D 961-8a	Channel for front door glass, right-hand, 698 mm long.	1
D 961-9	Channel for rear door glass, 754 mm long.	2
D 961-19	*Sealing strip, inner, for front door glass, 743 mm long (R. VI). No longer supplied.*	2
D 961-19a	*Sealing strip, inner, for rear door glass, 799 mm long (R. VI). No longer supplied.*	2
DS 961-23	Handle for window winder (white knob).	4
D 961-26	Escutcheon for window winder handle, 45 mm diameter.	4
DS 961-30b	Sealing strip, external for front door, 777 mm long.	2

NUMBER	DESCRIPTION	No. OFF
DS 961-31c	Sealing strip, external for rear door, 835 mm long.	2
D 961-67	Flexible washer, 10.9 x 19.02 for window winder (R. VI).	8
D 961-70	Movable stop, 16 x 22, for lift of door glass.	4
D 961-71	Movable stop, 35 x 22, for lift of front door glass.	2
D 961-74	Glazing rubber for door glasses, 754 mm long.	4
D 961-81	Side runner for glass (front left-hand and rear right-hand), 397 mm long, 2 welded screws at 280 mm between centres.	4
D 961-81a	Side runner for glass (front right-hand and rear left-hand), 397 mm long, 2 welded screws at 280 mm between centres.	4
D 961-112	Lockwasher for window winder on bottom of glass (R. VI).	8
D 961-123	Friction cup for escutcheon of window winder handle, 44 mm diameter.	4
D 961-124	Spring for window winder handle, internal diameter 32 mm and 45 mm.	4
D 961-137	Glass clamp, front left and rear right-hand for doors (R. VI).	4
D 961-137a	Glass clamp, front right and rear left-hand for doors (R. VI).	4
H 426-94	Screw, hex. head, 5 diameter x 75 pitch, securing movable stop.	8
2.334-S	Washer, shakeproof, 5.2 x 9.4, locking screw securing movable stop (R. VI).	4

NUMBER	DESCRIPTION	No. OFF
2.482-S	Plain washer, 7.5 x 14, securing upper part of side runner (R. III).	4
2.493-S	Nut, hex., 7 diameter x 100 pitch, locking side runner (R. III).	8
2.514-S	Washer, shakeproof, 7.3 x 12, securing side runner (R. VI).	8
2.548-S 30	Screw, round head, 5 diameter x 12.5 long, securing glass clamp (R. VI).	8
3.234-S	Washer, cupped, 6 mm diameter securing window winder (R. III).	8
6.278	Washer, 7.5 x 20 x 2, for adjustment of upper part of side runner (R. IV).	As nec.
617.004	Cylindrical pin, 3 x 14, for securing window winder handle (R. IV).	4
619.066	Washer, 7.5 x 30 x 1 for adjustment of lower part of side runner (R. IV).	As nec.
619.067	Washer, 7.5 x 30 x 2, for adjustment of lower part of side runner (R. IV).	As nec.
619.068	Washer, 7.5 x 20 x 0.5 for adjustment of upper part of side runner (R. IV).	As nec.
619.069	Washer, 7.5 x 20 x 1, for adjustment of upper part of side runner (R. II).	As nec.
619.763	Clip securing sealing strip for door glass (R. VI).	24
621.500	Screw, knurled head, 5 diameter x 12.5 long, securing window winder (R. VI).	16

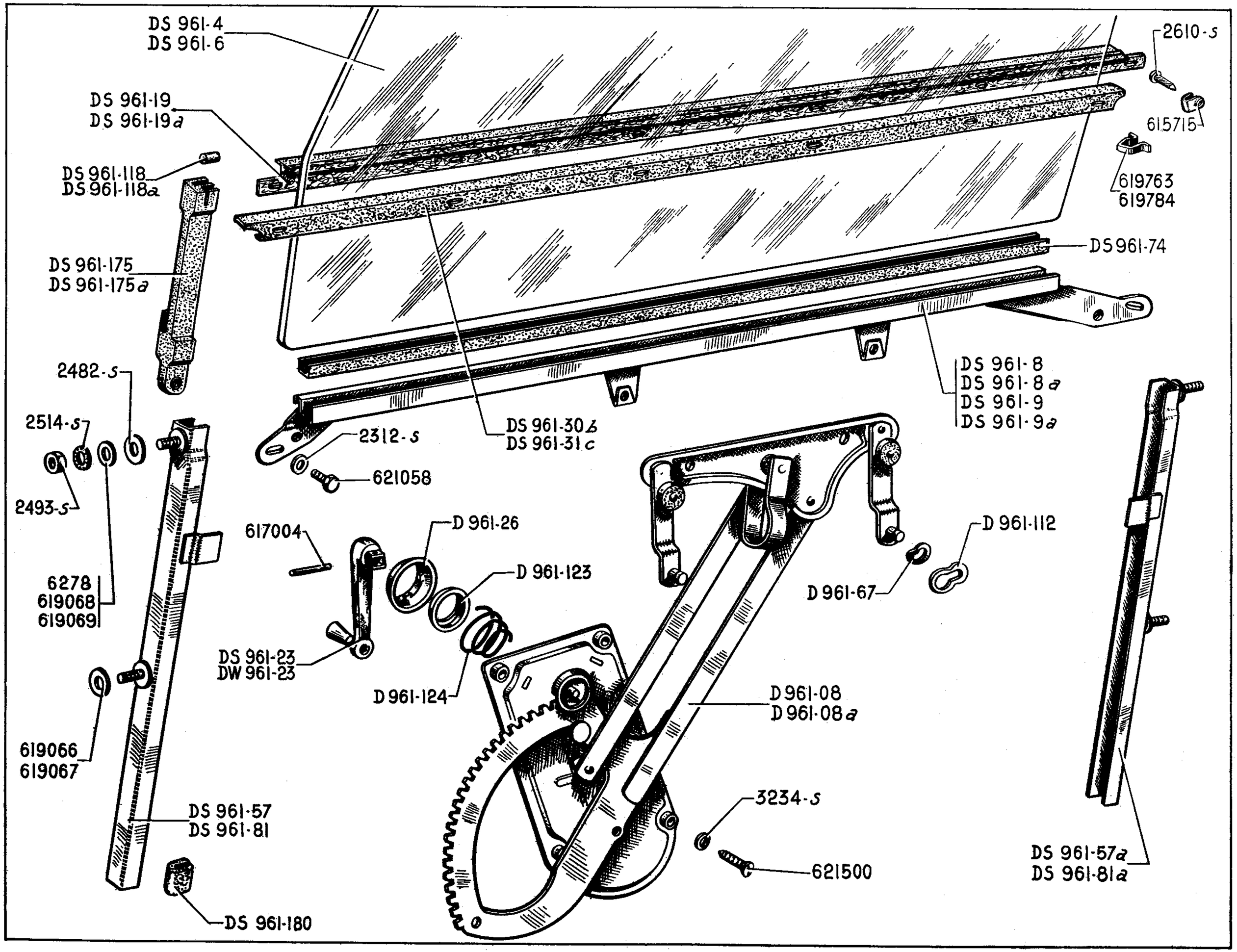
DS 961-4
DS 961-6
DS 961-19
DS 961-19a
DS 961-118
DS 961-118a
DS 961-175
DS 961-175a
2482-s
2514-s
2493-s
6278
619068
619069
619066
619067
DS 961-57
DS 961-81
DS 961-180
2312-s
621058
DS 961-30b
DS 961-31c
617004
D 961-26
D 961-123
DS 961-23
DW 961-23
D 961-124
2610-s
615715
619763
619784
DS 961-74
DS 961-8
DS 961-8a
DS 961-9
DS 961-9a
D 961-112
D 961-67
D 961-08
D 961-08a
3234-s
621500
DS 961-57a
DS 961-81a

NUMBER	DESCRIPTION	No. OFF
	ARRANGEMENT GLASS THICKNESS 4 mm. Since May 1957	
D 961-08	Window winder "Dura" 2 arm left-hand door (R. VI).	2
D 961-08a	Window winder "Dura" 2 arm right-hand door (R. VI).	2
DS 961-08	Window winder "Vachette" 2 arm left-hand door (R. VI). 2nd possibility.	2
DS 961-08a	Window winder "Vachette" 2 arm right-hand door (R. VI). 2nd possibility.	2
DS 961-4	Glass for front door (R. VI). Until June 1962.	2
DS 961-4c	Glass for front door, 5 mm thick (R. VI). Since June 1962.	2
DS 961-6	Glass for rear door (R. VI).	2
DS 961-8	Channel for front door glass, left-hand 736 mm between fixing centres.	1
DS 961-8a	Channel for front door glass, right-hand 736 mm between fixing centres.	1
DS 961-9	Channel for rear door glass, left-hand, 793 mm between fixing centres.	1
DS 961-9a	Channel for rear door glass, right-hand 793 mm between fixing centres.	1
DS 961-19	Sealing strip, inner for front door glass, 741 mm long (R. VI).	2
DS 961-19a	Sealing strip, inner for rear door glass, 797 mm long (R. VI).	2
DS 961-23	Handle for window winder (white knob). Until August 1961.	4
DW 961-23	Handle for window winder (black knob). Since August 1961.	4
D 961-26	Escutcheon for window winder handle, 45 mm diameter.	4

NUMBER	DESCRIPTION	No. OFF
DS 961-30b	Sealing strip, external for front door glass, 777 mm long.	2
DS 961-31c	Sealing strip, external for rear door glass, 835 mm long.	2
DS 961-57	Side runner for glass, 540 mm long, 2 welded screws at 280 mm between centres :	
	- front of rear door, left-hand.	1
	- rear of rear door, right-hand.	1
DS 961-57a	Side runner for glass, 540 mm long, 2 welded screws at 280 mm between centres:	
	- front of rear door, right-hand.	1
	- rear of rear door, left-hand.	1
D 961-67	Flexible washer 10.9 x 19.02 for window winder (R. VI).	8
DS 961-74	Glazing rubber for door glasses, 737 mm long.	
	Until June 1962.	4
	Since June 1962.	2
DS 961-74b	Glazing rubber for door glasses, 737 mm long, for glass 5 mm thick, white paint mark. Since June 1962.	2
DS 961-81	Side runner for glass, 570 mm long, 2 welded screws at 280 mm between centres:	
	- front of front door, left-hand.	1
	- rear of front door, right-hand.	1
DS 961-81a	Side runner for glass, 570 mm long, 2 welded screws at 280 mm between centres:	
	- front of front door, right-hand.	1
	- rear of front door, left-hand.	1
D 961-112	Lockwasher for window winder (R. VI).	8
DS 961-118	Rubber packing, 3.5 x 6, for glass slide. Until January 1961.	8
DS961-118a	Rubber packing, 16 x 8 x 4 for glass slide. Until January 1961.	8
D 961-123	Friction cup for escutcheon of window winder handle, 44 mm dia.	4

NUMBER	DESCRIPTION	No. OFF
D 961-124	Spring for window winder handle, internal diameter 32 mm and 45 mm.	4
DS 961-175	Slide for glass (nylon), 158 mm long (R. VI):	
	- front of front and rear doors, left-hand.	2
	- rear of front and rear doors, right-hand.	2
	For front doors, until June 1962.	
DS 961-175a	Slide for glass (nylon), 158 mm long (R. VI):	
	- front of front and rear doors, right-hand.	2
	- rear of front and rear doors, left-hand.	2
	For front doors, until June 1962.	
DS 961-175d	Slide for glass (nylon) for glass, 5 mm thick, for front door, left-hand and rear door, right-hand (R. VI). Since June 1962.	2
DS 961-175e	Slide for glass (nylon) for glass, 5 mm thick, for front door, right-hand and rear door, left-hand. Since June 1962.	2
DS 961-180	Protector, rubber, for side runner for rear door, 30 mm long (R. VI).	4
2.312-S	Washer, 5.5 x 9, securing door glass channel (R. III).	8
2.482-S	Washer, plain, 7.5 x 14, securing upper part of side runner (R. III).	4
2.493-S	Nut, hex., 7 diameter x 100 pitch, locking side runner (R. III).	8
2.514-S	Washer, shakeproof, 7.3 x 12, securing side runner (R. VI).	8
2.610-S	Screw, P.K. 3.5 x 15, securing external sealing strip (R. VI).	8
3.234-S	Washer, cupped, 6 mm diameter securing window winder (R. III).	8
6.278	Washer, 7.5 x 20 x 2, for adjustment of upper part of glass guide (R. IV).	As nec.

The numbers underlined indicate new parts and do not appear on the illustrations.

NUMBER	DESCRIPTION	No. OFF
617.004	Cylindrical pin 3 x 14 securing window winder handle (R.IV).	4
619.066	Washer 7.5 x 30 x 1 for adjustment of lower part of side runner (R.IV).	As nec.
619.067	Washer 7.5 x 30 x 2 for adjustment of lower part of side runner (R.IV).	As nec.
619.068	Washer 7.5 x 20 x 0.5 for adjustment of upper part of side runner (R.IV).	As nec.
619.069	Washer 7.5 x 20 x 1 for adjustment of upper part of side runner (R.II).	As nec.
615.715	Nut clip for screws securing external sealing strips (R.VI).	8
619.763	Clip securing internal sealing strip for door glass (R.VI).	24
619.784	Clip securing external sealing strip for door glass (R.VI).	24
621.058	Screw, hex. head 5 diameter 9 long securing slide on channel for door glass (R.IV).	8
621.500	Screw, knurled head 5 diameter 12.5 long securing window winder	16

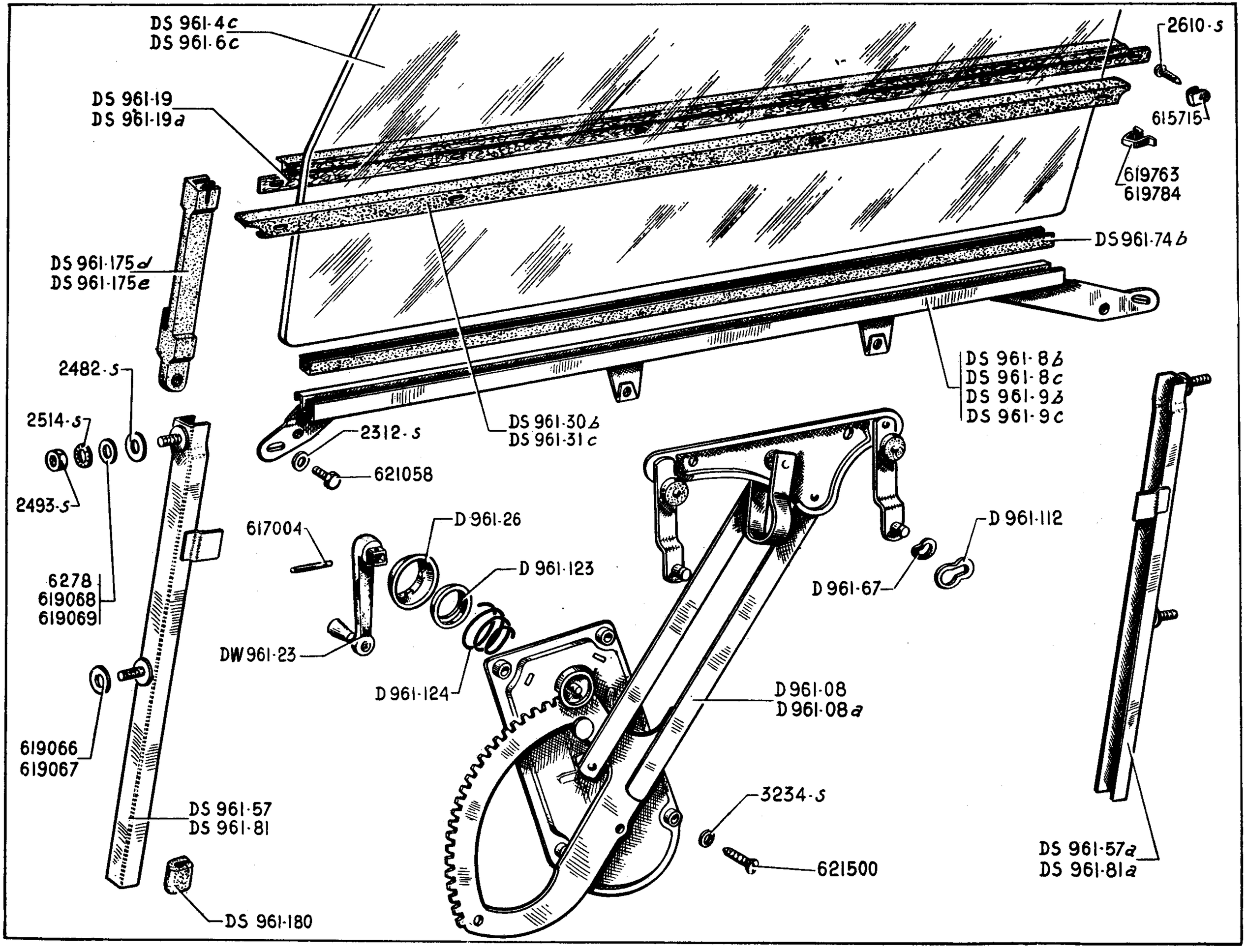
DS 961-4c
DS 961-6c
DS 961-19
DS 961-19a
2610-s
615715
619763
619784
DS 961-74b
DS 961-175d
DS 961-175e
2482-s
2514-s
2493-s
6278
619068
619069
619066
619067
2312-s
621058
DS 961-30b
DS 961-31c
DS 961-8b
DS 961-8c
DS 961-9b
DS 961-9c
617004
D 961-26
D 961-123
DW 961-23
D 961-124
D 961-112
D 961-67
D 961-08
D 961-08a
3234-s
621500
DS 961-57
DS 961-81
DS 961-180
DS 961-57a
DS 961-81a

NUMBER	DESCRIPTION	No. OFF
	FOR GLASS. Thickness 6 mm. UNTIL DECEMBER 1961	
D 961-08	Window winder "DURA" 2 arm for left hand door (R.VI).	2
D 961-08a	Window winder "DURA" 2 arm for right hand door (R.VI).	2
DS 961-08	Window winder "VACHETTE" 2 arm for left hand door (R.VI). 2nd possibility.	2
DS 961-08a	Window winder "VACHETTE" 2 arm for right hand door (R.VI). 2nd possibility.	2
DS 961-4b	*Glass for front door (R. VI). Replaced by DS 961-4c (R. VI); order in addition: 1-DS 961-81, 1-DS 961-81a, 1-DS 961-74b, 1-DS 961-175d (R. VI), 1-DS 961-175e (R. VI).*	2
DS 961-6b	Glass for rear door (R.VI).	2
DS 961-8b	Channel for front door glass, left hand, 736 mm. between fixing centres.	1
DS 961-8c	Channel for front door glass, right hand, 736 mm. between fixing centres.	1
DS 961-9b	Channel for rear door glass, left hand, 793 mm. between fixing centres.	1
DS 961-9c	Channel for rear door glass, right hand, 793 mm. between fixing centres.	1
DS 961-19	Sealing strip, inner for front door glass 741 mm. long (R.VI).	2
DS 961-19a	Sealing strip, inner for rear door glass 797 mm. long (R.VI).	2
DS 961-23	Handle for window winder (white knob) Until August 1961.	4
DW 961-23	Handle for window winder (black knob) Since August 1961.	4
D 961-26	Escutcheon for window winder handle, 45 mm. diameter.	4
DS 961-30b	Sealing strip, external for front door glass, 777 mm. long.	2
DS 961-31c	Sealing strip, external for rear door glass, 835 mm. long.	2
DS 961-57b	Side runner for glass, 540 mm. long 2 welded screws at 280 mm. between centres:	
	- front of rear door, left hand	1
	- rear of rear door, right hand	1
DS 961-57c	Side runner for glass, 540 mm. long, 2 welded screws at 280 mm. between centres:	
	- front of rear door, right hand	1
	- rear of rear door, left hand	1
D 961-67	Flexible washer 102.9 x 19.0 for window winder (R.VI).	8
DS 961-74	Glazing rubber for door glasses, 737 mm. long, external diameter 8 mm, internal diameter 4 mm.	4
DS 961-81b	Side runner for glass, 570 mm. long 2 welded screws at 280 mm. between centres:	
	- front of front door, left hand	1
	- rear of front door, right hand	1
DS 961-81c	Side runner for glass, 570 mm. long 2 welded screws at 280 mm. between centres:	
	- front of front door, right hand	1
	- rear of front door, left hand	1
D 961-112	Lockwasher for window winder on bottom of glass (R. VI).	8
DS 961-118	Rubber packing 3.5 x 6 for glass slide. Until January 1961.	8
DS 961-118a	Rubber packing 16 x 8 x 4 for glass slide. Until January 1961.	8
D 961-123	Friction cup for escutcheon of window winder handle 21 x 44 x 5.3	4
D 961-124	Spring for window winder handle, internal diameter 32 mm. and 45 mm.	4
DS 961-175b	Slide for glass (nylon) 158 mm. (R.VI)	
	- front of front and rear door, left hand.	2
	- rear of front and rear door, right hand.	2
DS 961-175c	Slide for glass (nylon) 158 mm. long (R.VI).	
	- front of front and rear door, right hand.	2
	- rear of front and rear door, left hand.	2
DS 961-180	Protector, rubber for side runner for rear door glass, 30 mm. long (R.VI).	4
2.312-S	Washer, 5.5 x 9 securing door glass channel (R.III).	8
2.482-S	Washer, plain 7.5 x 14 securing upper part of side runner (R.III).	8
2.493-S	Nut, hex. 7 diameter 100 pitch locking side runner (R.III).	8
2.514-S	Washer, shakeproof 7.3 x 12 securing side runner (R.VI).	8
2.610-S	Screw, P.K. 3.5 x 15 securing external sealing strip (R.VI).	8
3.234-S	Washer, cupped 6 mm. diameter securing window winder (R. III).	8
6.278	Washer, 7.5 x 20 x 2 for adjustment of upper part of glass guide (R.IV).	As nec.
615.715	Nut clips for screw securing external sealing strips (R.VI).	8
617.004	Cylindrical pin 3 x 14 securing window winder handle (R.IV).	4
619.066	Washer, 7.5 x 30 x 1 for adjustment of lower part of side runner (R.IV).	As nec.
619.067	Washer, 7.5 x 30 x 2 for adjustment of lower part of side runner (R.IV).	As nec.
619.068	Washer, 7.5 x 20 x 0.5 for adjustment of upper part of side runner (R.IV).	As nec.
619.069	Washer, 7.5 x 20 x 1 for adjustment of upper part of side runner (R.II).	As nec.
619.763	Clip securing internal sealing strip for door glass (R.VI).	24
619.784	Clip securing external sealing strip for door glass (R.VI).	24
621.058	Screw, hex. head 5 diameter 9 long securing slide on channel for door glass (R.IV).	8
621.500	Screw, knurled head 5 diameter, 12.5 long securing window winder (R.VI).	16

The numbers underlined indicate new parts and do not appear on the illustrations.

NUMBER	DESCRIPTION	No. OFF
	FOR GLASS. Thickness 5 mm. SINCE DECEMBER 1961	
D 961-08	Window winder "DURA" 2 arm for left hand door (R.VI).	2
D 961-08a	Window winder "DURA" 2 arm for right hand door (R.VI).	2
DS 961-08	Window winder "VACHETTE" 2 arm for left hand door (R. VI). 2nd possibility.	2
DS 961-08a	Window winder "VACHETTE" 2 arm for right hand door (R.VI). 2nd possibility.	2
DS 961-4c	Glass for front door (R.VI).	2
DS 961-6c	Glass for rear door (R.VI).	2
DS 961-8b	Channel for front door glass, left hand, 736 mm. between fixing centres	1
DS 961-8c	Channel for front door glass, right hand 736 mm. between fixing centres.	1
DS 961-9b	Channel for rear door glass, left hand, 793 mm. between fixing centres.	1
DS 961-9c	Channel for rear door glass, right hand 793 mm. between fixing centres.	1
DS 961-19	Sealing strip, inner for front door glass, 741 mm. long (R.VI).	2
DS 961-19a	Sealing strip, inner for rear door glass, 797 mm. long (R.VI).	2
DW 961-23	Handle for window winder (Black Knob)	4
D 921-26	Escutcheon for window winder handle 45 mm. diameter	4
DS 961-30b	Sealing strip, external for front door glass, 777 mm. long.	2
DS 961-31c	Sealing strip, external for rear door glass, 835 mm. long.	2
DS 961-57	Side runner for glass 540 mm. long 2 welded screws at 280 mm. between centres:	
	- front of rear door, left hand	1
	- rear of rear door, right hand	1
DS 961-57a	Side runner for glass 540 mm. long 2 welded screws at 280 mm. between centres:	
	- front of rear door, right hand	1
	- rear of rear door, left hand	1
DS 961-67	Flexible washer 10.9 x 19.02 for window winder (R.VI).	8
DS 961-74b	Glazing rubber for door glasses 737 mm. long (white paint mark)	4
DS 961-81	Side runner for glass, 570 mm. long 2 welded screws at 280 mm. between centres:	
	- front of front door, left hand	1
	- rear of front door, right hand	
DS 961-81a	Side runner for glass, 570 mm. long, 2 welded screws at 280 mm. between centres:	1
	- front of front door, right hand.	1
	- rear of front door, left hand.	1
D 961-112	Lockwasher for window winder on bottom of glass (R.VI).	8
D 961-123	Friction cup for escutcheon of window winder handle 21 x 44 x 5.3.	4
D 961-124	Spring for window winder handle, internal diameter 32 mm. and 45 mm.	4
DS 961-175d	Slide for glass (nylon) 158 mm. long (R.VI):	
	- front of front and rear door, left hand.	2
	- rear of front and rear door, right hand.	2
DS 961-175e	Slide for glass (nylon) 158 mm. long (R.VI).	
	- front of front and rear door, right hand.	2
	- rear of front and rear door, left hand.	2
DS 961-180	Protector, rubber for side runner for rear door glass, 30 mm. long (R.VI).	4
2.312-S	Washer 5.5 x 9 securing door glass channel (R.III).	8
2.482-S	Washer, plain, 7.5 x 14 securing upper part of side runner (R.III).	4
2.493-S	Nut, hex. 7 diameter 100 pitch locking side runner (R.III).	8
2.514-S	Washer, shakeproof 7.3 x 12 securing side runner (R.VI).	8
2.610-S	Screw, P.K. 3.5 x 15 securing external sealing strip (R.VI).	8
3.234-S	Washer, cupped 6 mm. diameter securing window winder (R.III).	8
6.278	Washer, 7.5 x 20 x 2 for adjustment of upper part of glass guide (R.IV).	As nec.
615.715	Nut, clips for screws securing external sealing strips (R.VI).	8
617.004	Cylindrical pin 3 x 14 securing window winder handle (R.IV).	4
619.066	Washer 7.5 x 30 x 1 for adjustment of lower part of side runner (R.IV).	As nec.
619.067	Washer 7.5 x 30 x 2 for adjustment of lower part of side runner (R.IV).	As nec.
619.068	Washer 7.5 x 20 x 0.5 for adjustment of upper part of side runner (R.IV).	As nec.
619.069	Washer 7.5 x 20 x 1 for adjustment of upper part of side runner (R.II).	As nec.
619.763	Clip securing internal sealing strip for door glass (R.VI).	24
619.784	Clip securing external sealing strip for door glass (R.VI).	24
621.058	Screw, hex. head 5 diameter 9 long securing channel for door glass (R.IV).	8
621.500	Screw, knurled head 5 diameter 12.5 long securing window winder (R.VI).	8

The numbers underlined indicate new parts and do not appear on the illustrations.

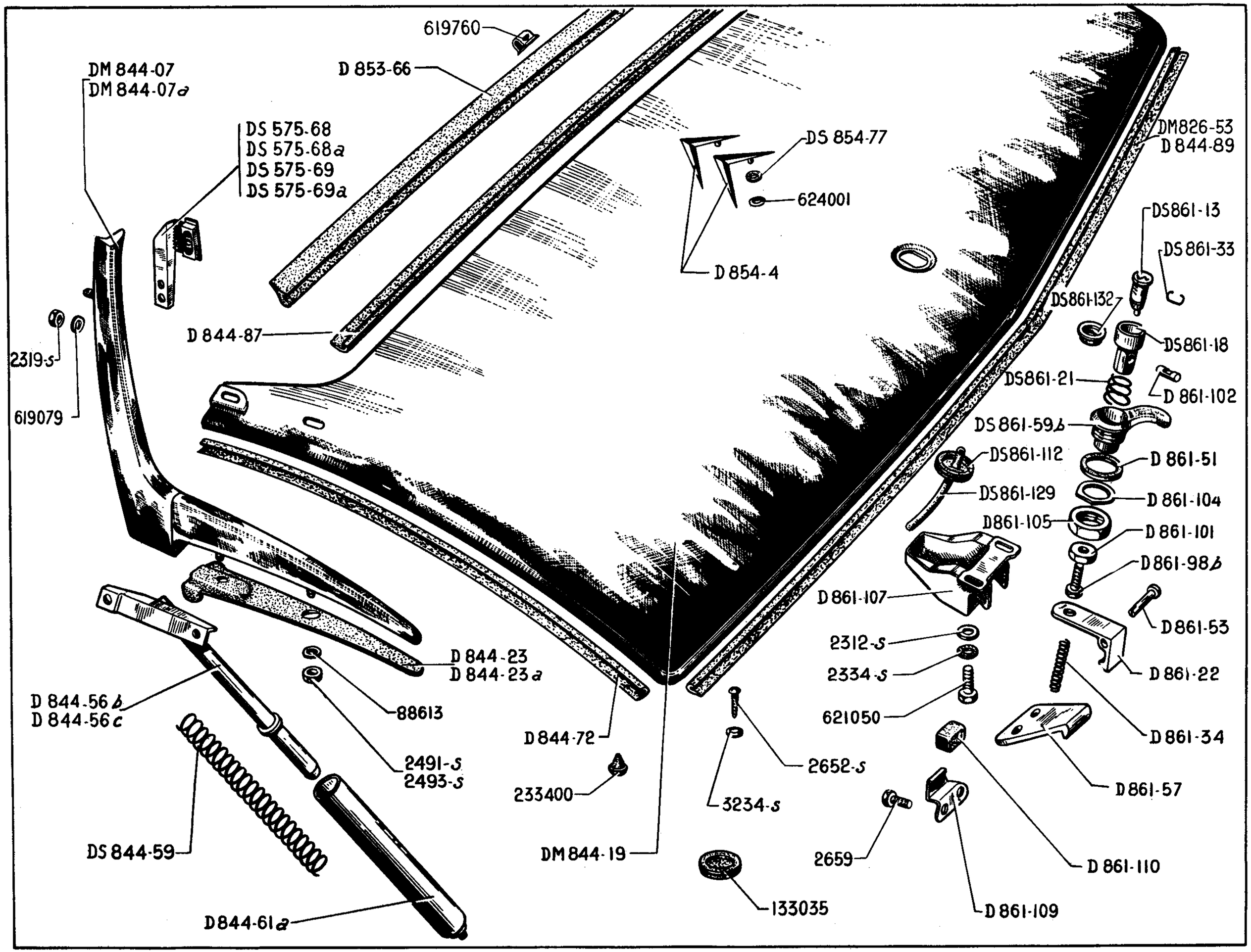
619760
D 853-66
DM 844-07
DM 844-07a
DS 575-68
DS 575-68a
DS 575-69
DS 575-69a
DS 854-77
624001
D 854-4
DM826-53
D 844-89
DS861-13
DS 861-33
DS861-132
DS861-18
DS861-21
D 861-102
DS 861-59b
D 861-51
DS861-112
DS861-129
D 861-104
D861-105
D 861-101
D 861-98b
D 861-107
D 861-53
D 861-22
D 861-34
D 861-57
D 861-110
D 861-109
2312-s
2334-s
621050
2652-s
3234-s
2659
133035
D 844-87
2319-s
619079
D 844-23
D 844-23a
88613
2491-s
2493-s
D 844-72
233400
DM 844-19
D 844-56b
D 844-56c
DS 844-59
D844-61a

NUMBER	DESCRIPTION	No. OFF
DS 575-68	Plate securing direction indicator on hinge, right-hand, 65 mm long. September 1956 - February 1958.	1
DS 575-68a	Plate securing direction indicator on hinge, right-hand, 50 mm long. Since February 1958.	1
DS 575-69	Plate securing direction indicator on hinge, left-hand, 65 mm long. September 1956 - February 1958.	1
DS 575-69a	Plate securing direction indicator on hinge, left-hand, 50 mm long. Since February 1958.	1
DM 826-53	Sealing strip for door. Export.	1
DM 844-07	Hinge assembly, left-hand for rear boot, without fixing plate at the upper part. Since June 1958. Replaces earlier types; order in addition: 1-DM 844-07a, 1-DS 575-68a, 1-DS 575-69a.	1
DM 844-07a	Hinge assembly, right-hand for rear boot, without fixing plate at the upper part. Since June 1958. Replaces earlier types; order in addition: 1-DM 844-07, 1-DS 575-68a, 1-DS 575-69a.	1
DM 844-19	Boot door, only.	1
D 844-23	Rubber joint between left-hand hinge and boot door, 262 mm long.	1
D 844-23a	Rubber joint between right-hand hinge and boot door, 262 mm long.	1
D 844-56b	Stay, male, with bracket for door, left-hand.	1

NUMBER	DESCRIPTION	No. OFF
D 844-56c	Stay, male, with bracket for door, right-hand.	1
DS 844-59	Spring for door stay (25 coils).	2
D 844-61a	Stay, female, for door, 180 mm long.	2
D 844-72	Sealing strip, rubber, lateral for door, 600 mm long.	2
D 844-87	Sealing strip, rubber, upper, for door, 1240 mm long.	1
D 844-89	Sealing strip, rubber, lower for door, 1 m long.	1
D 853-66	Finishing strip, rubber, between rear window and rear boot door, 1650 mm long.	1
D 854-4	Chevron for boot door.	2
DS 854-77	Sealing washer, rubber, for chevrons.	4
DS 861-13	Set of 4 lock barrels (5 wards), for front doors, rear boot door and ignition switch (R. VI).	1
DS 861-18	Push-button (for barrels) 5 wards (R. VI).	1
DS 861-21	Return spring for push-button.	1
D 861-22	Bolt for lock.	1
DS 861-33	Circlip for barrel (R. VI).	1
D 861-34	Return spring for lock bolt, 26 mm long.	1
D 861-51	Washer, rubber, 30 x 36 x 2, for push-button guide.	1

NUMBER	DESCRIPTION	No. OFF
D 861-53	Pin, 6 mm diameter, 25.5 mm long under head for pivot of bolt lock.	1
D 861-57	Striking plate for lock, 55 mm long, 26 mm between fixing centres.	1
DS 861-59b	Guide for push-button, 32 mm long.	1
D 861-98b	Screw for push-button adjustment, length under head 30 mm.	1
D 861-101	Nut, hex., 5 diameter x 75 pitch, locking push-button adjusting screw.	1
D 861-102	Pin for lock barrel (R. VI).	1
D 861-104	Lockwasher, 28 x 40 locking push-button guide.	1
D 861-105	Nut, hex., 30 diameter x 150 pitch, locking push-button guide.	1
D 861-107	Lock housing.	1
D 861-109	Plate securing flexible buffer, 27 mm long, 26 mm between fixing centres.	1
D 861-110	Stop, rubber, 10 x 14 x 26 for striking plate.	1
DS 861-112	Sealing grommet on rear boot door. Since January 1961.	1
DS 861-129	Water overflow pipe on push-button guide (R. VI). Since January 1961.	1
DS 861-132	Cup retaining push-button guide (R. VI). Since July 1959.	1
2.312-S	Washer, plain 5.5 x 9, for boot door lock (R. III).	2
2.319-S	Nut, hex., 5 diameter x 75 pitch, securing upper part of hinge (R. III).	4

NUMBER	DESCRIPTION	No. OFF
2.334-S	Washer, shakeproof, 5.2 x 9.4, for door lock (R. VI).	2
2.491-S	Nut, hex., 7 diameter x 100 pitch, for locking lower part of hinge (R. III).	2
2.493-S	Nut, hex., 7 diameter x 100 pitch, securing stay on door (R. III).	4
2.652-S	Screw, P.K. 5 diameter x 15 long, securing lower strip for door (R. VI).	2
2.659	Screw, hex. head, 5 diameter x 13 long, securing striking plate (R. III).	2
3.234-S	Washer, cupped, 6 mm diameter for lower strip of door (R. III).	2
88.613	Washer, plain, 7.5 x 30 x 2.4, securing lower part of hinge (R. III).	2

NUMBER	DESCRIPTION	No. OFF
133.035	Grommet, sealing rear boot door (R. IV).	2
233.400	Rubber stop for door.	2
619.079	Washer (aluminium), 5.5 x 12 x 2, securing hinge (R. IV).	8
619.760	Clip securing rubber between rear window and rear boot door (R. VI).	12
621.050	Screw, hex. head, 5 diameter x 20 long, securing door lock (R. IV).	2
624.001	Washer, flexible, 4 mm diameter hole for securing chevrons on door (R. VI).	4

NUMBER	DESCRIPTION	No. OFF
	SPECIAL PARTS CABRIOLET	
DS 844-013	Hinge for rear boot door, left-hand (R. VI).	1
DS 844-013a	Hinge for rear boot door, right-hand (R. VI).	1
DS 844-72	Sealing strip for rear boot door (R. VI).	1
DS 823-73	Rear closing panel for rear boot (upper part) (R. VI).	1
DS 844-31	Door for rear boot (R. VI).	1
DS 844-59a	Compensating spring for rear boot door (R. VI).	2

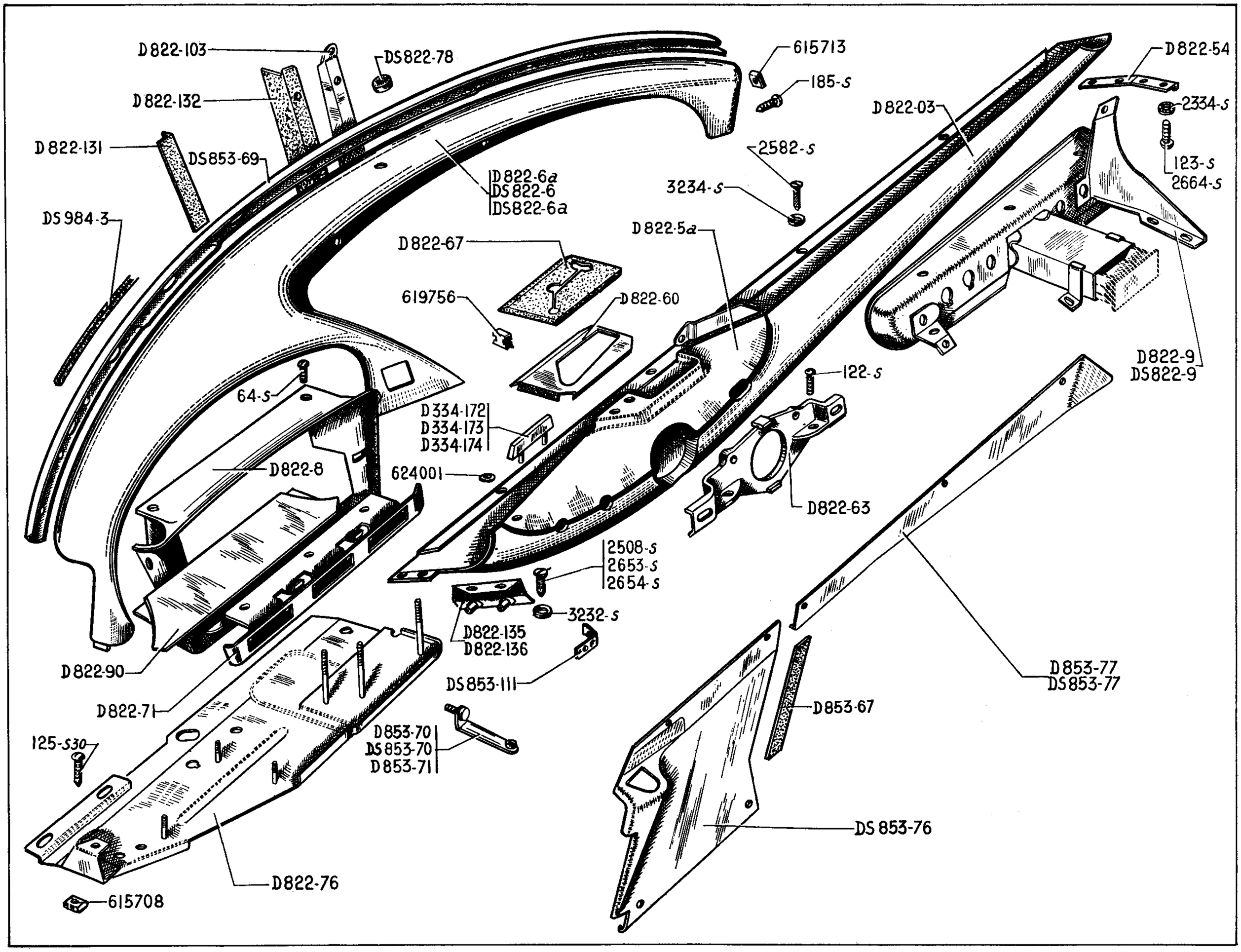
D822-103
DS822-78
615713
185-s
D822-54
D822-132
D822-03
2334-s
D822-131
DS853-69
2582-s
123-s
2664-s
D822-6a
DS822-6
DS822-6a
3234-s
DS984-3
D822-5a
D822-67
619756
D822-60
D822-9
DS822-9
122-s
64-s
D334-172
D334-173
D334-174
D822-8
624001
D822-63
2508-s
2653-s
2654-s
3232-s
D822-135
D822-136
D822-90
DS853-111
D853-77
DS853-77
D822-71
D853-67
D853-70
DS853-70
D853-71
125-s30
DS853-76
D822-76
615708

NUMBER	DESCRIPTION	No. OFF
	UNTIL AUGUST 1961	
D 334-172	Indication plate for 1st and reverse speeds (R. VI).	1
D 334-173	Indication plate for 2nd, 3rd and 4th speeds (R. VI).	1
D 334-174	Indication plate for starter and neutral (R. VI).	1
D 822-03	Facia panel, lower. Since March 1958. Replaces earlier type; order in addition 1-D 822-5a.	1
D 822-5a	Cover for facia panel. Since March 1958. Replaces earlier type; Order in addition 1-D 822-03.	1
D 822-6a	Facia panel, upper. Until May 1959	1
DS 822-6	Facia panel, upper with hole for clock. Since May 1959.	1
DS 822-6a	Facia panel, upper with hole for temperature gauge U.S.A.	1
D 822-8	Surround for speedometer (R. VI).	1
D 822-9	Central support for electrical and mechanical controls with opening for ashtray. Until February 1961.	1
DS 822-9	Central support for electrical and mechanical controls with opening for ashtray. Since February 1961.	1
D 822-54	Plate securing lower facia, right hand.	1
D 822-60	Reinforcement on cover of facia panel.	1
D 822-63	Finishing plate for securing lower facia panel.	1
D 822-67	Rubber sheet for passage of gear selector lever.	1
D 822-71	Lower plate for speedometer surround (without tell-tales) (R.VI).	1
D 822-76	Support for electrical and mechanical controls (under steering column).	1

NUMBER	DESCRIPTION	No. OFF
DS 822-78	Rubber washer for facia panel.	2
D 822-90	Plate, upper for speedometer surround (R. VI).	1
D 822-103	Support between ventillation grille and glovebox, right hand.	1
D 822-131	Finishing strip (rubber) between left hand ventillation grille and speedometer surround.	1
D 822-132	Finishing strip (rubber) between right hand ventillation grille and glovebox.	1
D 822-135	Plate, lateral, securing lower facia panel, left hand.	1
D 822-136	Plate, lateral, securing lower facia panel, right hand.	1
D 853-67	Sealing strip, rubber, right hand on metal panel, left hand.	1
DS 853-69	Finishing panel, between windscreen and facia panel.	1
D 853-70	Plate securing metal panel on dashboard, left hand. Until April 1957.	1
DS 853-70	Plate securing metal panel on dashboard, 126 mm long, left hand. Since April 1957.	1
D 853-71	Plate securing metal panel, left hand length 49 mm on engine housing panel.	1
DS 853-76	Panel, left hand under scuttle shelf.	1
D 853-77	Panel under scuttle shelf, one hole 37 mm diameter for windscreen wiper control, right hand. Until May 1960.	1
DS 853-77	Panel, right hand under scuttle shelf. Since May 1960.	1
DS 853-111	Plate securing, left hand panel, on engine housing panel. Since April 1957.	1
DS 984-3	Rubber strip sealing finishing panel for windscreen (R. VI). by the metre.	As nec.

NUMBER	DESCRIPTION	No. OFF
64-S	Screw, round head 4 diameter 12.5 long securing speedometer surround (R. III).	3
122-S	Screw, round head 5 diameter 7.5 long securing finishing strip (R.III).	2
123-S	Screw, round head 5 diameter 10 long securing plate on crossmember (R. III).	2
125-S 30	Screw, round head 5 diameter 15 long securing: - central support - lateral plates	 5 4
185-S	Screw, raised head countersunk securing facia panel (R. III).	3
2.334-S	Washer, shakeproof 5 diameter 12 long for screws securing plate on crossmember (R. III).	4
2.508-S	Screw, raised head countersunk 4.85 diameter 16 long securing cover (R. VI).	1
2.582-S	Screw, P.K. 3.5 diameter 15 long securing plate on lower facia panel (R. VI).	2
2.653-S	Screw, P.K. 5 diameter 20 long securing upper facia panel (R. VI).	2
2.654-S	Screw, P.K. 5 diameter 25 long securing facia panel (R. VI).	2
2.664-S	Screw, round head 3.5 diameter 20 long securing central support (R. III).	3
3.232-S	Washer, cupped 5 mm diameter for screw securing plate on lower facia panel (R. III).	2
3.234-S	Washer, cupped 6 mm diameter securing plate on upper facia panel (R. III).	10
615.708	Nut clip for 3.5 mm diameter screw, securing facia panel (R. VI).	10
615.713	Nut clip for 4.85 mm diameter screw, securing facia panel (R. VI).	4
619.756	Clip securing rubber for gear selector lever (R. VI).	4
624.001	Flexible washer, 4 mm diameter hole (R. VI) securing: - indicator plate.	 6

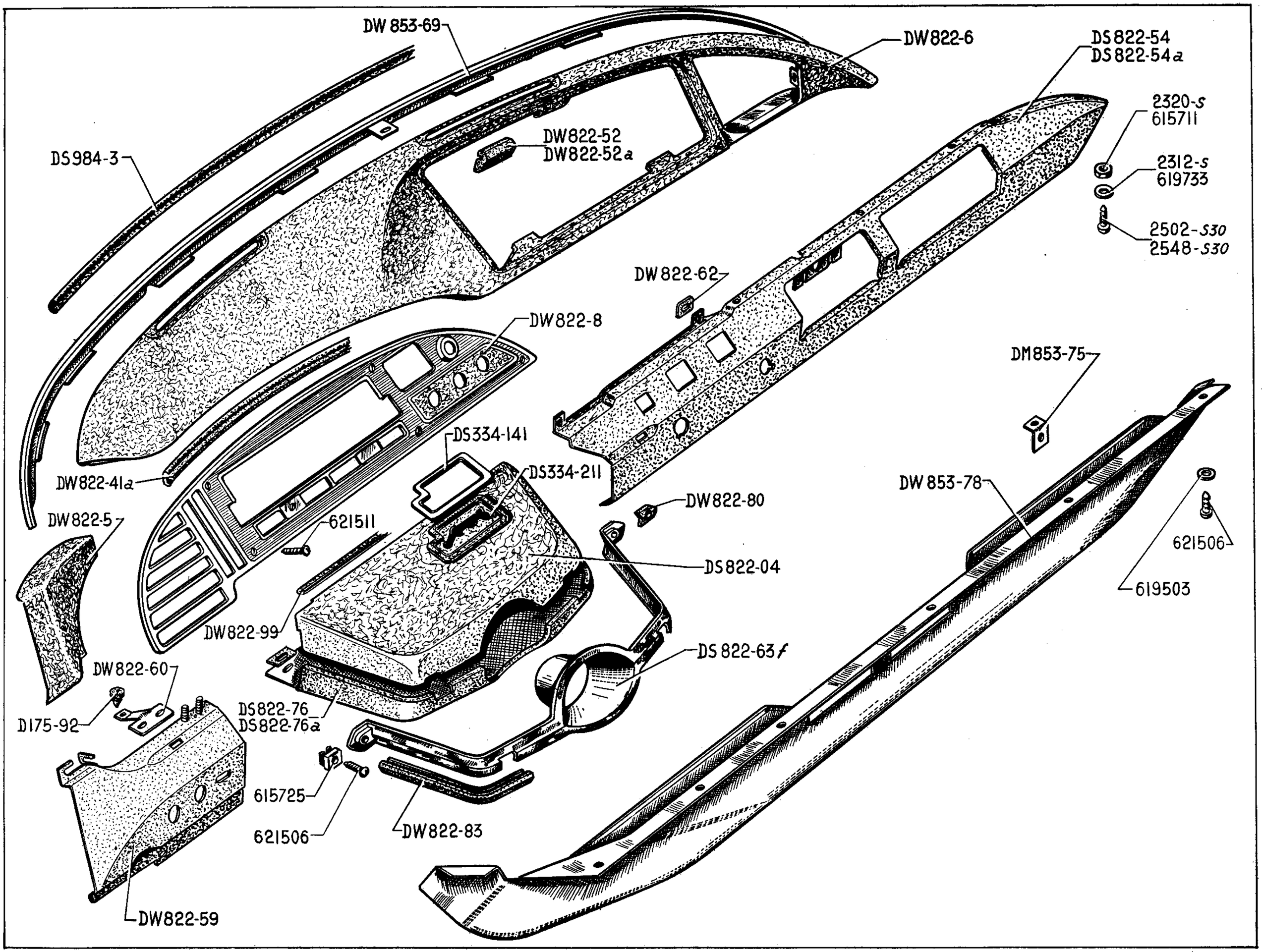
DW 853-69
DW822-6
DS 822-54
DS 822-54a
2320-S
615711
2312-S
619733
2502-S30
2548-S30
DS984-3
DW822-52
DW822-52a
DW822-62
DW822-8
DM853-75
DS334-141
DS334-211
DW822-41a
DW 853-78
DW822-80
DW822-5
621511
621506
DS822-04
619503
DW822-99
DS 822-63f
DW822-60
D175-92
DS822-76
DS822-76a
615725
621506
DW822-83
DW822-59

NUMBER	DESCRIPTION	No. OFF
	SINCE AUGUST 1961	
D 175-92	Flexible buffer.	1
DS 334-141	Finisher for gear change speed lever opening (R. VI).	1
DS 334-211	Finishing rubber for gear change speed lever opening.	1
DS 822-04	Cover for support for electrical controls.	1
DW 822-5	Facia panel upper, left hand.	1
DW 822-6	Facia panel upper, right hand.	1
DW 822-8	Surround for speedometer (R. VI).	1
DW 822-41a	Sealing strip between facia panel and surround 211 mm long, right hand.	1
DW 822-52	Flexible packing for facia panel support (upper part) 15 mm high (R. VI).	4
DW 822-52a	Flexible packing for facia panel support (lateral part) 11 mm high (R. VI).	4
DS 822-54	Facia panel, lower, right hand.	1

NUMBER	DESCRIPTION	No. OFF
DS 822-54a	Facia panel, lower, right hand. (cold climates).	1
DW 822-59	Facia panel, lower, left hand.	1
DW 822-60	Support for buffer on facia panel (upper part).	1
DW 822-62	Anti-rattle packing between panel and clip (40 x 20 x 0.8).	3
DS 822-63f	Finisher for steering column opening (R. VI).	1
DS 822-76	Support for electrical controls.	1
DS 822-76a	Support for electrical controls. (German anti-theft arrangement).	1
DW 822-80	Rubber packing for steering column finisher.	2
DW 822-83	Rubber surround for assembling support for electrical controls and cover, 100 mm long.	1
DW 822-99	Finishing strip between facia panel and cover 105 mm long (R. VI).	1
DW 853-69	Finishing panel between windscreen and facia panel.	1
DM 853-75	Plate securing metal panel.	1
DW 853-78	Metal panel under scuttle shelf.	1

NUMBER	DESCRIPTION	No. OFF
DS 984-3	Sealing strip for windscreen finisher (R. VI). by the metre.	As nec.
2.312-S	Washer, plain 5.5 x 9 securing facia panel (R. III).	2
2.320-S	Nut, hex. 5 diameter 75 pitch securing facia panel (R. III).	2
2.502-S-30	Screw, round head 5 diameter 12 long securing facia panel (R. VI).	2
2.548-S-30	Screw, round head 5 diameter 16.5 long securing facia panel. (R. VI).	1
615.711	Nut clip for screws for facia panel and speedometer surround (R. VI).	10
615.725	Nut, securing finisher for steering column. (R. VI).	2
619.133	Washer 5.25 x 15 x 1.5 securing facia panel (R. IV).	5
619.503	Washer, cupped securing metal panel (R. VI).	6
621-506	Screw, raised head countersunk 5 diameter 20 long (R. IV) securing:	
	- metal panel	6
	- finisher	2
621-511	Screw, raised head countersunk 5 diameter 20 long securing speedometer surround (R. VI).	5

NUMBER	DESCRIPTION	No. OFF
	WINDSCREEN	
DS 565-117	Rubber stop for wiper arm on central pressure pad. Until June 1956.	2
DS 565-117a	Rubber stop for wiper arm on lower windscreen surround. Since June 1956.	4
DM 961-17	Sealing strip, lower. Until August 1961.	1
DW 961-17	Sealing strip, lower. Since August 1961.	1
D 961-98	Glazing strip, upper, 2.160 m (R. VI).	1
DS 961-146	Glazing strip, lower, 1.550 m long.	1
DS 961-161b	Surround, lower for glass, with central fixing plate.	1
2.491-S	Nut, hex. 7 diameter 100 pitch for adjustment of glass support (R.III). Until June 1956.	2
D 961-3a	Windscreen glass "TRIPLEX" (R.VI). U.S.A.	1
DS 961-3a	Windscreen glass only, "LUXRIT". Since June 1959. Replaces earlier types; order in addition 1-DS 961-146, 1-DS 961-161b, 1-DS 961-189.	1
DS 961-136	Rubber for pressure pad. Until June 1956.	1
DS 961-56	Pressure pad, lateral 50 mm long 17.5 mm wide 36 mm high. Since September 1956.	2

NUMBER	DESCRIPTION	No. OFF
D 961-63	Reinforcement securing pressure pad 62 mm long 60 mm wide. Until June 1956.	1
DS 961-189	Reinforcement central for windscreen surround on scuttle dome. Since November 1957.	1
2.312-S	Washer 5.5 x 9 securing pressure pad on scuttle dome (R. III).	2
D 961-59	*Lateral support, adjustable for windscreen glass. Until June 1956. Replaced by DS 961-59; order in addition: 1-DS 961-59a.*	2
DS 961-59	Lateral support, adjustable, left hand. June 1956 - September 1956.	1
DS 961-59a	Lateral support, adjustable, right hand. June 1956 - September 1956.	1
125-S	Screw, round head 5 diameter 15 long securing pressure pad on scuttle dome (R. III).	2
485-S-30	Screw, hex. head 7 diameter 20 long securing lateral adjustable support. June 1956 - September 1956.	4
	REAR WINDOW THICKNESS 6 mm. Until May 1957	
D 961-27	Sealing rubber, upper for window glass, 2 m long.	1
D 961-29	Sealing rubber, lower for window glass 1.670 m long.	1
D 961-134	Rubber for pressure pad.	2
DS 961-151	Rubber for central pressure pad.	1
DS 961-7b	Glass for rear window (R. VI).	1
D 961-133	Pressure pad, left hand.	1
D 961-133a	Pressure pad, right hand.	1

NUMBER	DESCRIPTION	No. OFF
D 961-150	Pressure pad, central.	1
3.234-S	Washer, cupped 6 mm for upper rubber (R. III).	2
D 825-92	Screw, round head 7 diameter 20 long, securing pressure pad (R. VI).	2
481-S	Screw, hex. head 7 diameter 10 long securing central pressure pad (R. III).	1
2.654-S	Screw, P.K. 5 diameter 25 long locking upper rubber (R. VI).	2
	REAR WINDOW THICKNESS 4 mm. Since March 1957	
D 961-27	Sealing rubber, upper for window glass, 2 m long.	1
D 961-29	Sealing rubber, lower for window glass, 1.670 m long.	1
DS 961-134	Rubber for pressure pad 51 x 57 x 41.	2
DS 961-151	Rubber for central pressure pad 60 x 25.	1
DS 961-7	Glass for rear window 4 mm thick.	1
DS 961-7b	Glass for rear window 6 mm thick (R. VI). U.S.A.	1
DS 961-133	Pressure pad, left hand.	1
DS 961-133a	Pressure pad, right hand.	1
DS 961-150	Pressure pad, central.	1
DS 961-163	Pressure pad, lateral (R. VI).	2
DS 961-185	Washer, fibre 7.2 x 15 x 1.5 for screw securing central pressure pad (R. VI).	1
DS 961-184	Screw, hex. head 7 x 7 securing central pressure pad.	1

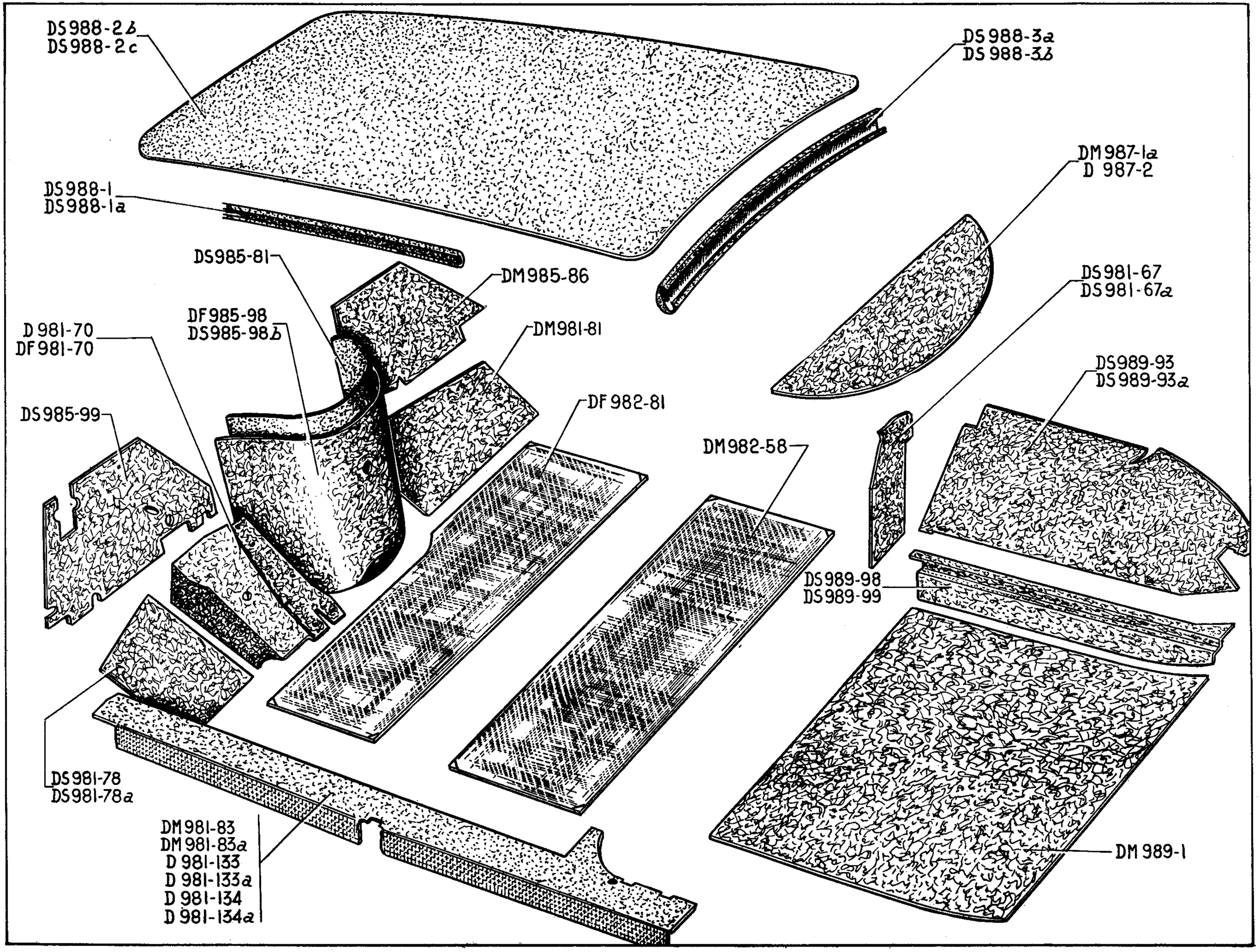
DS988-2b
DS988-2c
DS988-3a
DS988-3b
DS988-1
DS988-1a
DM987-1a
D 987-2
DS985-81
DM985-86
DS981-67
DS981-67a
DF985-98
DS985-98b
D 981-70
DF981-70
DM981-81
DS989-93
DS989-93a
DS985-99
DF982-81
DM982-58
DS989-98
DS989-99
DS981-78
DS981-78a
DM981-83
DM981-83a
D 981-133
D 981-133a
D 981-134
D 981-134a
DM 989-1

NUMBER	DESCRIPTION	No. OFF
	ROOF	
	Until September 1962	
DS 988-1	Finishing strip, rubber (grey) for inside of roof 3,850 mm. long	1
DS 988-1a	Finishing strip, rubber (beige) for inside of roof 3,850 mm. long	1
DS 988-2b	*Packing for sound deadening with roof fabric (Grey). Replaced by DS 988-2d.*	1
DS 988-2c	Sound deadening lining with cloth, for roof (beige)	1
	Since September 1962	
DS 988-1b	Finishing strip, rubber (grey) for inside of roof 3,850 mm. long (R.VI).	1
DS 988-1c	Finishing strip, rubber (beige) for inside of roof 3,850 mm. long (R.VI).	1
DS 988-2d	Sound deadening lining with cloth, for roof (grey)	1
DS 988-2e	Sound deadening lining with cloth, for roof (beige)	1
	DASHFRAME	
	Until September 1962	
D 981-70	*Trimming for brake pedal panel. Until July 1961. No longer supplied.*	1
DF 981-70	Lining for brake pedal panels. Since July 1961.	1
DS 981-78	*Trimming for dashframe panel, lower part, left-hand. Until July 1961. No longer supplied.*	1
DS 981-78a	Lining for dashframe panel, lower, left hand. Since July 1961.	1
DM 981-81	Lining for dashframe panel, lower, right hand.	1
DM 981-83	Lining (light grey) for sidemember and body siderail, left hand. BERLINE.	1
DM 981-83a	Lining (light grey) for sidemember and body siderail, right hand BERLINE.	1
D 981-133	Front lining for sidemember, left hand (R.VI). PRESTIGE.	1
D 981-133a	Front lining for sidemember, right hand (R.VI). PRESTIGE.	1
D 981-134	Rear lining for sidemember, left hand (R.VI). PRESTIGE.	1
D 981-134a	Rear lining for sidemember, right hand (R.VI). PRESTIGE	1
DS 985-81	Padding (cardboard) for lining of engine housing panel (R.VI). Since February 1961.	1
DM 985-86	Lining (felt) for dashframe panel, upper, right hand.	1
DF 985-98	Lining (felt) for engine housing panel, central. Until February 1961.	1
DS 985-98b	Lining (felt) for engine housing panel, central. Since February 1961.	1
DS 985-99	Lining (felt) for dashframe panel, upper, left hand.	1
	Since September 1962	
DS 981-78b	Lining for dashframe panel, lower, left hand.	1
DS 981-81	Lining for dashframe panel, lower, right hand.	1
DM 981-83h	Lining for sidemember and body siderail, left hand . BERLINE.	1
DS 981-83m	Lining for sidemember and body siderail, right hand. BERLINE.	1
DS 981-127	Lining for brake pedal panel.	1
DS 981-129	Sound deadening felt for brake pedal panel.	1
D 981-133	Front lining for sidemember, left hand (R.VI). PRESTIGE.	1
D 981-133a	Front lining for sidemember, right hand (R.VI). PRESTIGE.	1
D 981-134	Rear lining for sidemember, left hand (R.VI). PRESTIGE.	1
D 981-134a	Rear lining for sidemember, right hand (R.VI). PRESTIGE.	1
DS 985-73	Lining for engine housing panel.	1
DS 985-86	Lining for dashframe, upper, right hand.	1
DS 985-99d	Lining for dashframe, upper, left hand.	1
DS 986-97	Lining for lateral scuttle panel, right hand.	1
DS 986-99	Lining for lateral scuttle panel, left hand.	1
	REAR WINDOW	
DM 987-1a	Lining for rear shelf. BERLINE. Until September 1962.	1
DM 987-1c	Lining for rear shelf. BERLINE. Since September 1962.	1
D 987-2	Lining for rear shelf. (R.VI). PRESTIGE.	1
DS 988-3a	Lining, upper for rear window (grey)	1
DS 988-3b	Lining, upper for rear window (beige)	1
	REAR BOOT	
DS 981-67	Lining (felt) for wheelarch closing panel, left hand. Until September 1962.	1
DS 981-67a	Lining (felt) for wheelarch closing panel, right hand.Until September 1962.	1
DS 981-67b	Lining (felt) for wheelarch closing panel, left hand. Since September 1962.	1
DS 981-67c	Lining (felt) for wheelarch closing panel, right hand. Since September 1962.	1
DS 982-54b	Sound deadening lining for bottom of rear boot. Since September 1962.	1
DM 989-1	Lining (felt) for bottom of rear boot.	1
DS 989-93	Lining (felt) on wheelarch, left hand.	1
DS 989-93a	Lining (felt) on wheelarch, right hand.	1
DS 989-98	Lining (felt) on rear sidemember, right hand.	1
DS 989-99	Lining (felt) on rear sidemember, left hand.	1
	FLOOR PANELS	
DM 982-58	Lining (cardboard) for panel under rear carpet. Until September 1962.	1
DS 982-58b	Lining for sound deadening under rear carpet. Since September 1962.	1
DF 982-81	Lining (cardboard) for panel under front carpet.	1
DS 982-81b	Lining for sound deadening under front carpet. Since September 1962.	1

The numbers underlined indicate new parts and do not appear on the illustrations.

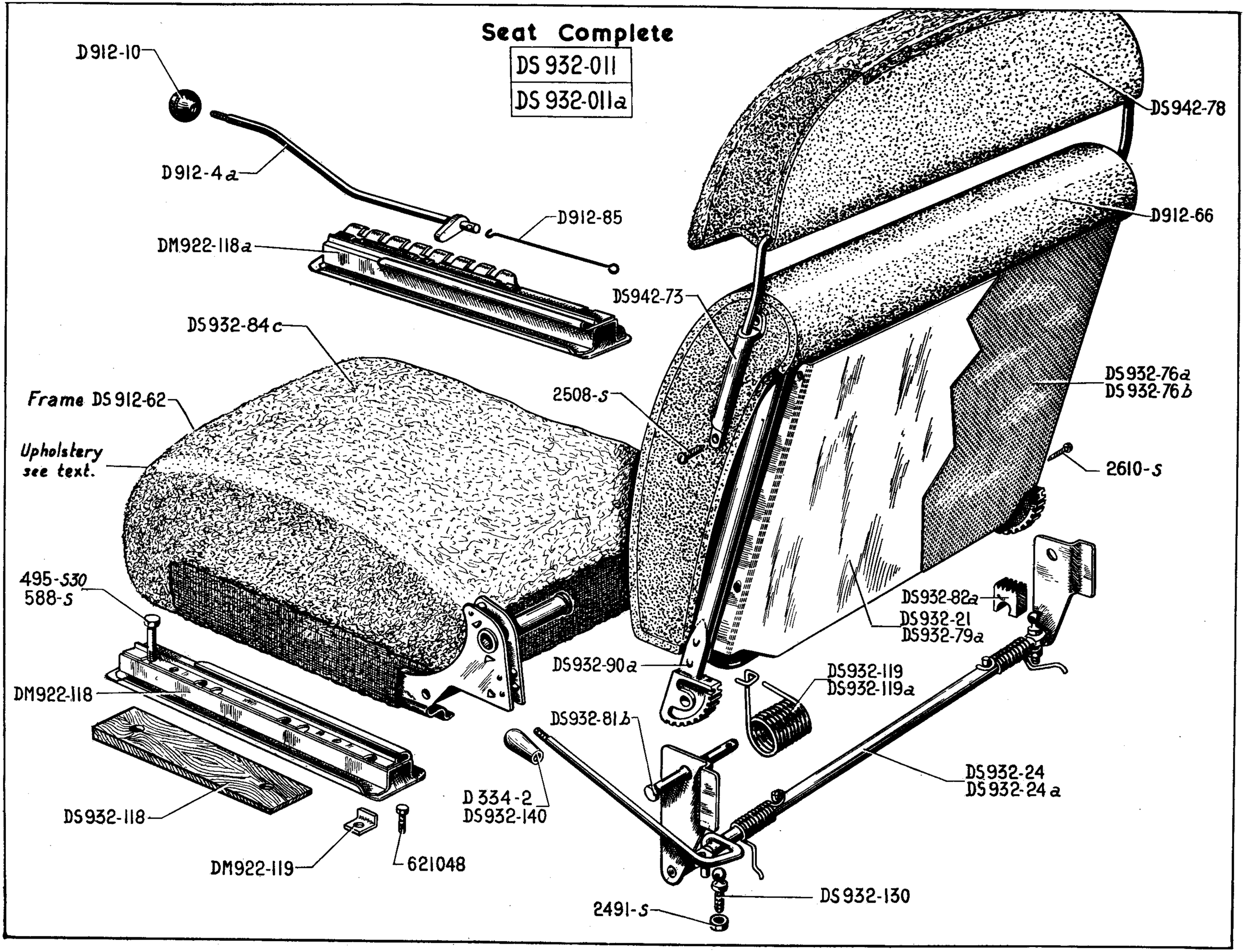
Seat Complete
DS 932-011
DS 932-011a
D912-10
D912-4a
D912-85
DM922-118a
DS942-73
DS942-78
D912-66
DS932-84c
Frame DS912-62
Upholstery see text.
2508-s
DS932-76a
DS932-76b
2610-s
495-s30
588-s
DS932-82a
DS932-21
DS932-79a
DS932-90a
DS932-119
DS932-119a
DM922-118
DS932-81b
DS932-24
DS932-24a
D334-2
DS932-140
DS932-118
DM922-119
621048
DS932-130
2491-s

NUMBER	DESCRIPTION	No. OFF
	UNTIL JULY 1960	
D 912-4	*Lever for locking front seat, 231 mm long. Until December 1959. No longer supplied.*	2
D 912-4a	Locking lever for front seat, 197 mm long. Since December 1960.	2
D 912-10	Knob for locking lever (R. VI).	2
D 912-78	Support for front seat, right-hand. Until December 1959.	2
D 912-79	Support for front seat, left-hand. Until December 1959.	2
D 912-80	Stop for front seat. Until December 1959.	2
D 912-85	Return spring for locking lever.	2
DM 922-118	Support for front seat, left-hand. Since December 1959.	2
DM 922-118a	Support for front seat, right-hand. Since December 1959.	2
DM 922-119	Stop for front seat (R. VI). Since December 1959.	2
DS 932-9a	Knob, nylon, for operating swivelling of front seat (R. VI).	4
DS 932-76	*Lining for squab of seat. Replaced by DS 932-76b.*	2
DS 932-81a	Pin for swivelling front seat.	4
DS 932-82	Pressure pad locking swivelling of front seat (R. VI).	4
DS 932-84	*Spring case for cushion. Until December 1959. Replaced by DS 932-84a; order in addition: 1-D 912-4a, 1-DM 922-118, 1-DM 922-118a, 1-DM 922-119 (R. VI).*	2
DS 932-84a	Spring case for cushion. Since December 1959.	2
DS 932-90	Spring case for squab.	2
DS 932-99b	Casing, nylon, for swivel of front seat, left-hand (R. VI).	2
DS 932-99c	Casing, nylon for swivel of front seat, right-hand (R. VI).	2

NUMBER	DESCRIPTION	No. OFF
DS 932-118	Packing under front seat support.	4
DS 942-73	Socket for securing head-rest (R. VI).	2
DS 942-78	Spring case for head-rest, with blades and screws.	1
2.492-S	Screw, raised head, countersunk, 4 x 8, securing finishing casing on swivel pin (R. VI).	2
2.508-S	Screw, raised head, countersunk, 4.85 x 16, (cruciform slot) securing blades (R. VI).	4
2.756-S	Screw, round head, 3.5 x 9.5, securing finishing casing on seat frame (R. VI).	2
	Since July 1960	
D 334-2	Knob for lever controlling front seat squab (white) (R. VI). Until September 1961.	2
D 912-4a	Locking lever for front seat, 197 mm long. Until September 1962.	2
DM 912-4	Locking lever for front seat. Since September 1962.	2
D 912-10	Knob for front seat locking lever (R. VI).	2
DS 912-62	Metallic frame reinforcing cushion (R. VI). Since January 1961.	2
D 912-66	Rubber lining for squab (R. VI).	2
D 912-85	Return spring for locking lever.	2
DM 922-118	Support for front seat, left-hand.	2
DM 922-118a	Support for front seat, right-hand.	2
DM 922-119	Stop for front seat (R. VI). Until September 1962.	2
DS 932-011	Front seat complete, left-hand without trimming fabric.	1
DS 932-011a	Front seat complete, right-hand without trimming fabric.	1
DS 932-21	Closing panel for front seat squab. CABRIOLET.	2
DS 932-24	Swivelling control for squab, left-hand (R. VI).	1

NUMBER	DESCRIPTION	No. OFF
DS 932-24a	Swivelling control for squab, right-hand (R. VI).	1
DS 932-76a	*Lining for squab of seat. Until October 1961. Replaced by DS 932-76b.*	2
DS 932-76b	Lining for squab panel. Since October 1961.	2
DS 932-79a	Closing panel only, for front seat squab. BERLINE.	2
DS 932-81b	Pin for swivelling front seat squab 87 mm long (R. VI).	4
DS 932-82a	Pressure pad locking swivelling of front seat (R. VI).	4
DS 932-84c	Spring case for cushion.	2
DS 932-90a	Spring case for squab.	2
DS 932-118	Packing under front seat support. Until September 1962.	4
DS 932-119	Return spring for squab, left-hand.	2
DS 932-119a	Return spring for squab, right-hand.	2
DS 932-130	Ball pin for positioning pressure pad (R. VI).	4
DS 932-140	Knob (black) for lever controlling front seat squab (R. VI). Since September 1961.	2
DS 942-73	Socket for securing head-rest (R. VI).	2
DS 942-78	Spring case for head-rest, with blades and screws.	1
495-S 30	Screw, hex. head, 7 diameter x 45 long, securing support (R. III).	4
588-S	Screw, hex. head, 7 diameter x 50 long, securing support (R. III).	4
2.491-S	Nut, hex., 7 diameter x 100 pitch, locking positioning ball pin (R. III).	4
2.508-S	Screw, raised head countersunk, 4.85 x 16 (cruciform slot) securing socket (R. VI).	4
2.610-S	Screw, raised head countersunk, 3.5 x 15, securing panel (R. VI).	12
621.048	Screw, hex. head, 5 diameter x 22 long, securing stop (R. III). Until September 1962.	2

The numbers underlined indicate new parts and do not appear on the illustrations.

NUMBER	DESCRIPTION	No. OFF
	REAR CUSHION	
DS 923-10	Spring case for rear cushion.	1
D 923-90a	Sleeve for positioning rear cushion, 39 mm long (R. VI).	2
D 923-91	Distance piece securing rear cushion. Replaced by D 923-90a (R. VI).	2
D 923-92	Cup for positioning rear cushion.	2
135-S	Screw, round head, 5 diameter x 40 long, securing rear cushion (R. III).	2
	REAR SQUAB	
DS 923-5	Spring case for rear seat squab without arm-rest or finishing panel.	1
DS 941-82a	Central arm-rest for rear squab with spring case.	1
DS 941-91	Finishing panel for arm-rest.	1
	FRONT SEAT TRIMMING	
DS 932-3	Trimming for front seat squab. Until July 1960.	2
DS 932-3a	Trimming for front seat squab. Since July 1960.	2
DS 932-7	Trimming for front seat cushion. Until December 1960.	2
DS 932-7a	Trimming for front seat cushion. Since December 1960.	2
	REAR SEAT	
DS 923-2	Trimming for rear seat squab, left-hand.	1
DS 923-2a	Trimming for rear seat squab, right-hand.	1
DS 923-11	Trimming for rear seat cushion.	1
DS 941-78	Trimming for rear seat central arm-rest.	1
	LOOSE COVERS	
D 984-100	Set of loose covers for repairs comprising: - 2 seat trimmings. - 1 rear cushion trimming. - 1 rear squab trimming. Until July 1960.	1
D 984-100a	Set of loose covers for repairs comprising: - 2 seat trimmings. - 1 rear cushion trimming. - 1 rear squab trimming. Since July 1960.	1
	SPECIAL PARTS PRESTIGE	
D 923-121	Stud for front cushion (R. VI).	2
D 923-22	Front cushion complete (leather trim) (R. VI).	1
D 923-21	Front squab complete (leather trim) (R. VI).	1
D 923-100	Angle plate securing lug (R. VI).	4
D 923-120	Yoke retaining front squab (R. VI).	2
D 923-107	Lug for front squab, left-hand (R. VI).	1
D 923-107a	Lug for front squab, right-hand (R. VI).	1

NOTE - The trimmings are only supplied against patterns and if available.

NUMBER	DESCRIPTION	No. OFF
D 941-1	Arm-rest (only) for front and rear doors, left hand.	2
D 941-1a	Arm-rest (only) for front and rear doors, right hand.	2
619.762	Clip securing panel (R. VI). Until May 1957.	As nec.
619.766	Clip securing door trimming panel (R. VI). Since May 1957.	40
619.778	Clip securing door trimming panel (R. VI). Since May 1957.	4
D 841-57	Protection strip for bottom of front door, 523 mm long, left hand.	1
D 841-57a	Protection strip for bottom of front door, 523 mm long, right hand.	1
D 842-56	Protection strip for bottom of rear door, 350 mm long, left hand.	1

NUMBER	DESCRIPTION	No. OFF
D 842-56a	Protection strip for bottom of rear door, 350 mm long, right hand.	1
DS 983-81	Plug sealing clip securing door panel, length under collar 12 mm (R. VI).	44
D 986-95	Trim, lower, on centre pillar, left hand (beige) (R. VI).	1
D 986-95a	Trim, lower, on centre pillar, right hand (beige) (R. VI).	1
D 986-95d	Trim, lower, on centre pillar, left hand (light grey) (R. VI).	1
D 986-95e	Trim, lower, on centre pillar, right hand (light grey) (R. VI).	1
DS 983-10	Finishing beading for front door panel, left hand (R. VI).	1
DS 983-10a	Finishing beading for front door panel right hand (R. VI).	1
DS 983-11	Finishing beading for rear door panel left hand (R. VI).	1
DS 983-11a	Finishing beading for rear door panel right hand (R. VI).	1

NUMBER	DESCRIPTION	No. OFF
D 941-2	Spring case for rear door arm rest, left hand (R. VI).	1
D 941-2a	Spring case for rear door arm rest, right hand (R. VI).	1
D 841-17	Panel (leather trim) for front door, left hand. PRESTIGE.	1
D 841-18	Panel (leather trim) for front door, right hand. PRESTIGE.	1
D 842-18	Panel (leather trim) for rear door, left hand. PRESTIGE.	1
D 842-19	Panel (leather trim) for rear door, right hand. PRESTIGE.	1
D 983-59	Panel (only) without arm-rest, for front door, left hand. BERLINE.	1
D 983-71	Panel, (only) with arm-rest, for rear door, left hand. BERLINE.	1
D 983-71a	Panel, (only) with arm-rest, for rear door, right hand. BERLINE.	1
D 983-75	Panel, (only) with arm-rest, for front door, right hand. BERLINE.	1
DS 983-75	Panel, (only) with arm-rest, for front door, left hand. U.S.A.	1
2.499-S	Screw, P.K. 3.5 x 9.5 securing protection strip for bottom of doors (R. VI).	As nec.

NUMBER	DESCRIPTION	No. OFF
	HEAD-REST	
DS 942-94	Head-rest spring case for quarter panel, left hand.	1
DS 942-94a	Head-rest spring case for quarter panel, right hand.	1
	HOOD CABRIOLET	
DS 854-39	Finishing strip for hood, left hand (R. VI).	1
DS 854-39a	Finishing strip for hood, right hand (R. VI).	1
DS 971-39	Clamp for hood, left hand (R. VI).	1
DS 971-39a	Clamp for hood, right hand (R. VI).	1
DS 971-49	Spindle for swan neck (R. VI).	2
DS 972-01	Hood trimmed (without frame) (R. VI).	1
DS 854-38	Cover joint for hood finisher (R. VI).	1
DS 972-3	Loose cover for hood (R. VI).	1
DS 971-38	Handle for operating hood (R. VI).	1
DS 971-81	Rubber strip under hood sidemember, left hand (R. VI).	1
DS 971-81a	Rubber strip under hood sidemember, right hand (R. VI)	1

NUMBER	DESCRIPTION	No. OFF
DS 971-50	Spring for swan neck spindle (R. VI).	2
DS 971-54	Return spring for hood articulation (R. VI).	2
DS 971-56	Screw securing hood articulation rods (R. VI).	12
	CARPET BERLINE	
DM 982-58	Lining (cardboard) for panel under rear carpet. Until September 1962.	1
DS 982-58b	Sound deadening lining under rear carpet. Since September 1962.	1
DF 982-81	Lining (cardboard) for panel under front carpet. Until September 1962.	1
DS 982-81b	Sound deadening lining under front carpet. Since September 1962.	1
D 981-1a	Front carpet. Until July 1960.	1
DS 981-1b	Front carpet. July 1960 - June 1961.	1
DS 981-1c	Front carpet. June 1961 - September 1962.	1
DS 981-1g	Front carpet. Since September 1962.	1
DS 981-2a	Rear carpet. Until September 1962.	1
DS 981-2e	Rear carpet. Since September 1962.	1
	CABRIOLET	
DS 982-44	Sound deadening lining under rear carpet (R. VI).	1
DS 981-7	Front carpet (R. VI). Until September 1962.	1

NUMBER	DESCRIPTION	No. OFF
DS 981-7a	Front carpet (R. VI). Since September 1962.	1
DS 981-8	Rear carpet (R. VI). Until September 1962.	1
DS 981-8a	Rear carpet (R. VI). Since September 1962.	1
	PRESTIGE	
D 981-7	Front carpet (R. VI).	1
D 981-8	Rear carpet (R. VI).	1
	FIXING	
DS 981-115	Clip, male securing carpet. Since June 1961.	6
DS 981-138	Clip, female for carpet, with peg (R. VI). Since June 1961.	6
70.029	Press-fastener securing carpet (R. VI). Until January 1957.	6
613.159	Ball catch securing carpet on cross-rail (R. VI). January 1957 - June 1961.	6
613.158	Cap for press-fastener securing carpet (R. VI). Until June 1961.	6
D 981-90	Plate with press-fastener securing carpet. Until January 1957. Replaced by DS 981-90; order in addition 1-613.159 (R. VI).	6
DS 981-123	Plate securing male clip for carpet. June 1961 - September 1962.	6
DS 981-123a	Plate securing male clip for carpet. Since September 1962.	6
2.746-S	Screw P.K. round head 4.85 x 16 securing plate (R. VI).	6

The numbers underlined indicate new parts and do not appear on the illustrations.